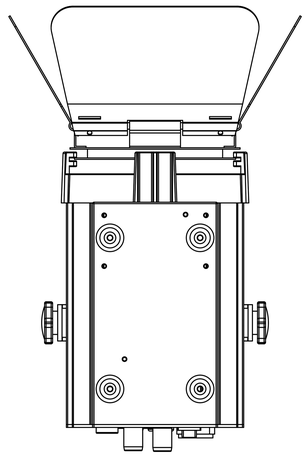

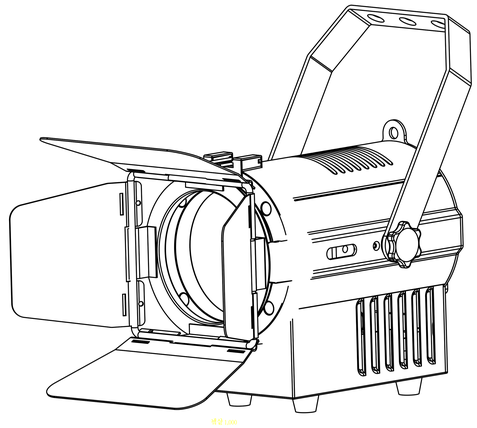

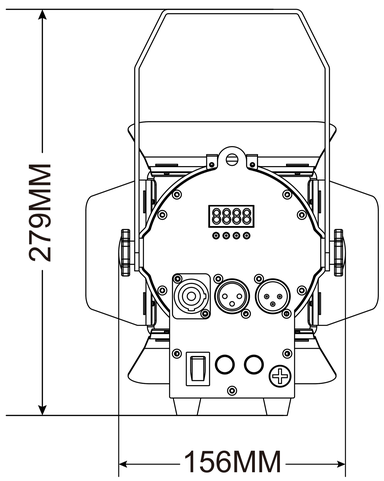
279MM
156MM

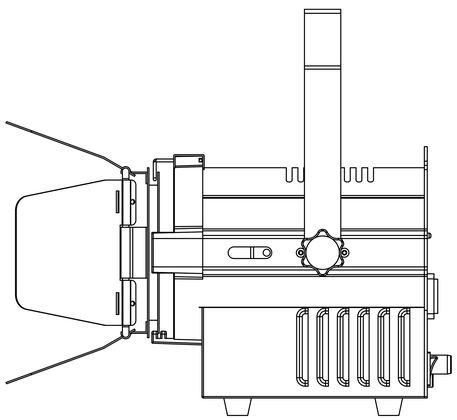

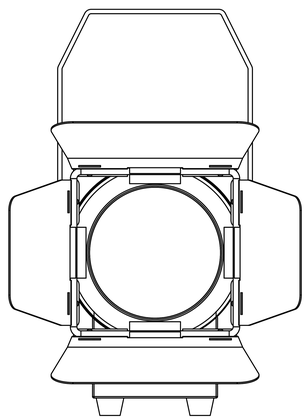

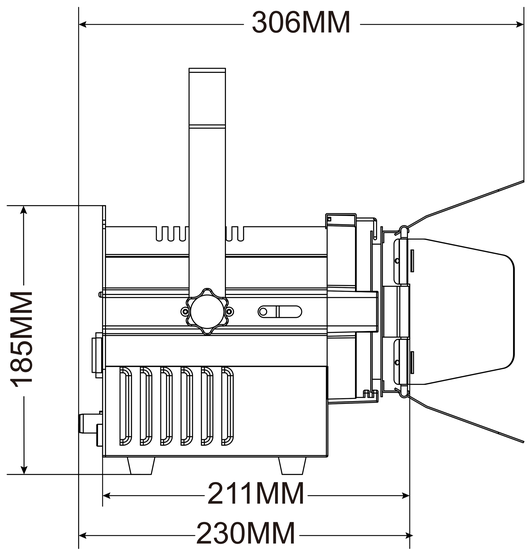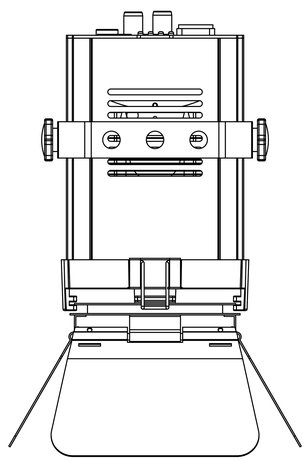
306MM
185MM
211MM
230MM