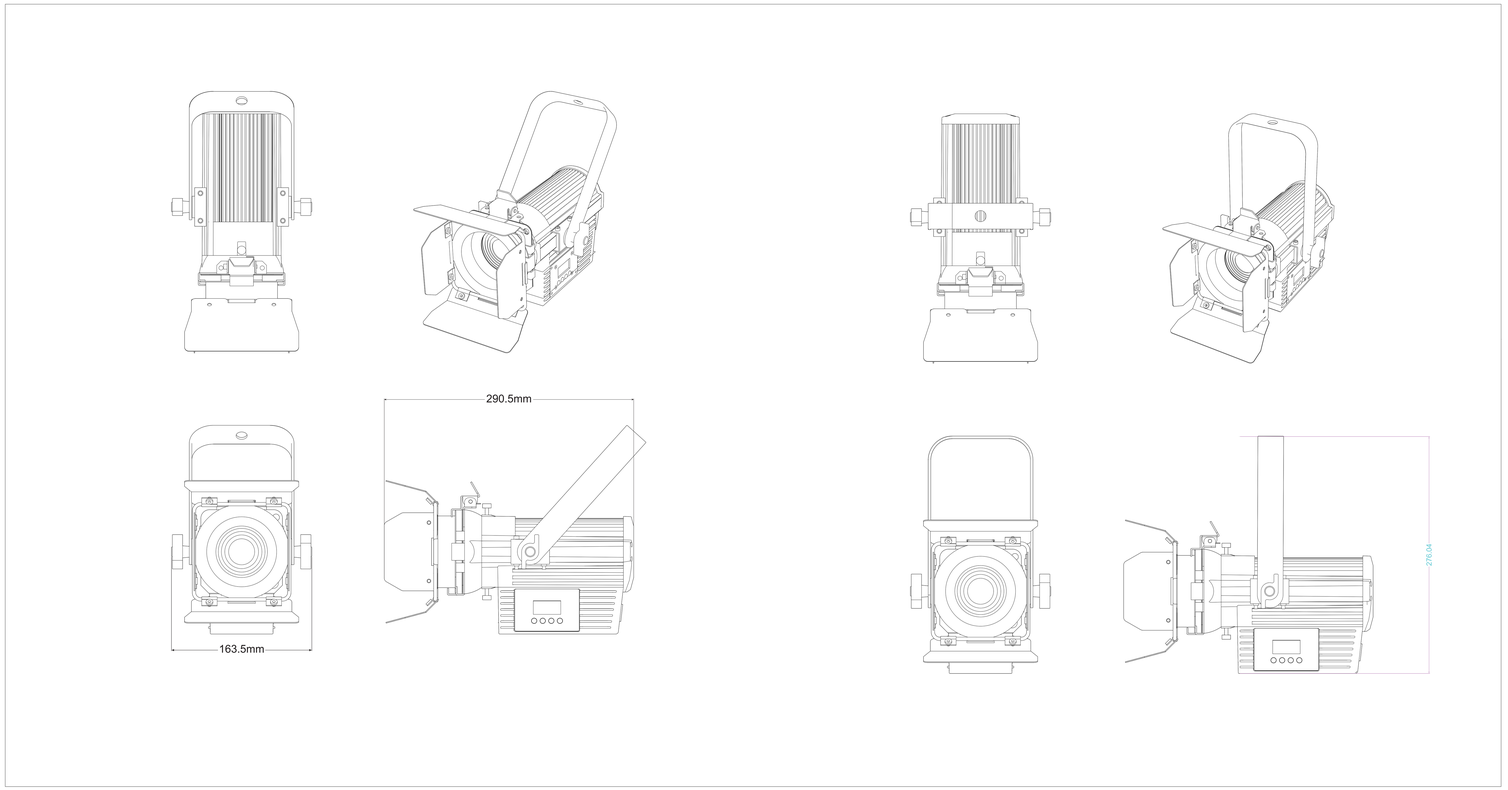
290.5mm
163.5mm
276.04

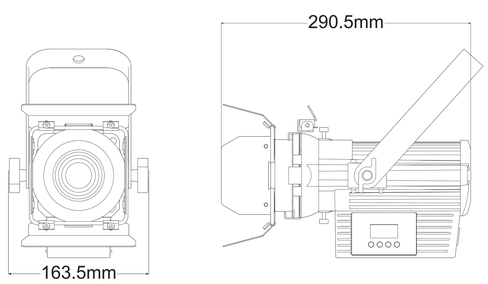
290.5mm
163.5mm