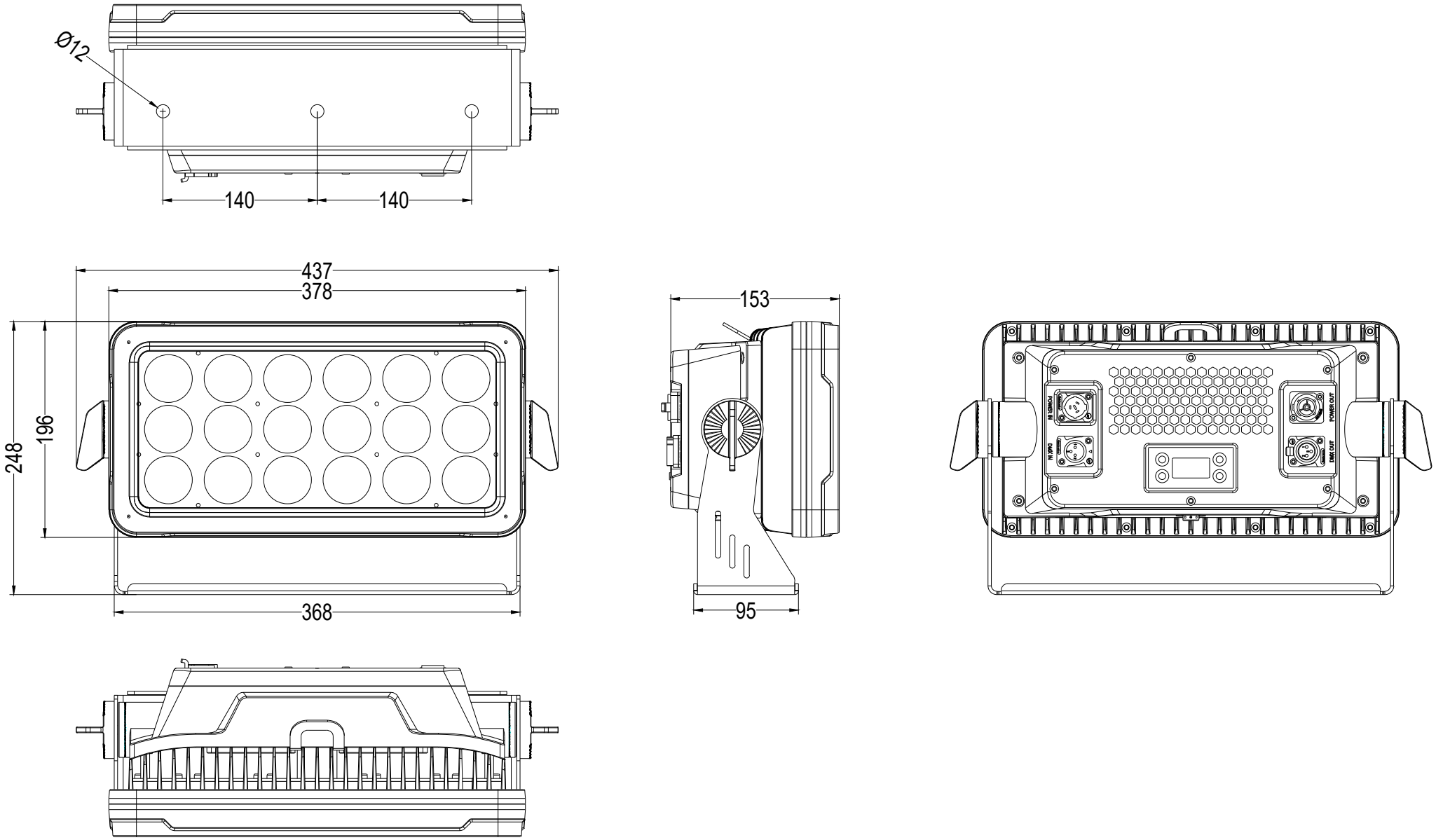
Ø12
140
140
437
378
248
196
368
153
95
POWER IN
DMX IN
POWER OUT
DMX OUT