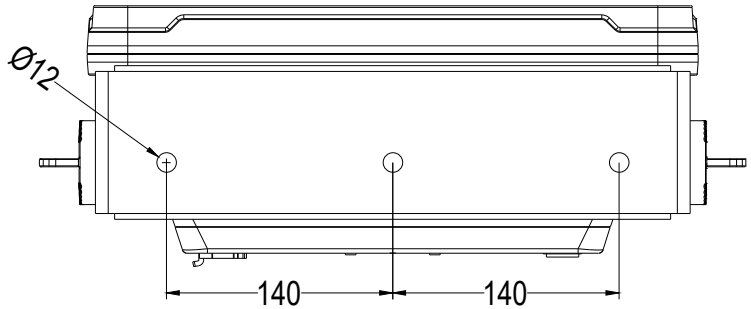
Ø12
140
140

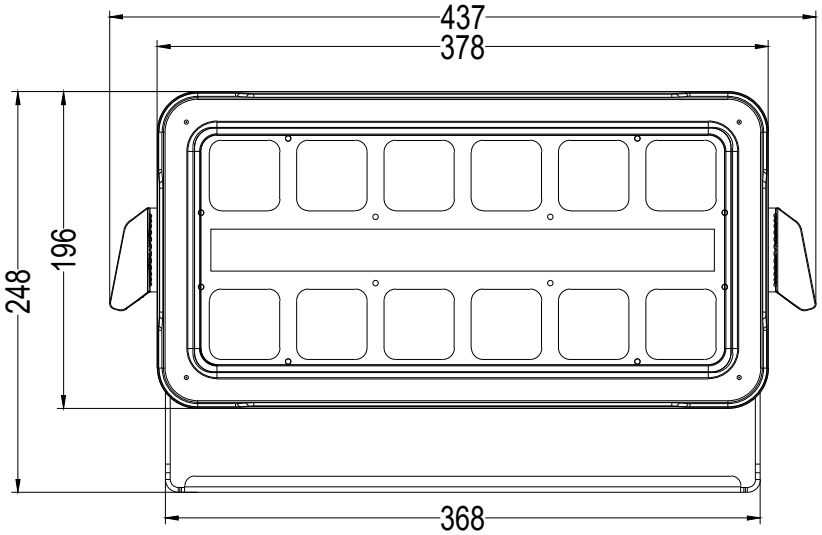
437
378
248
196
368

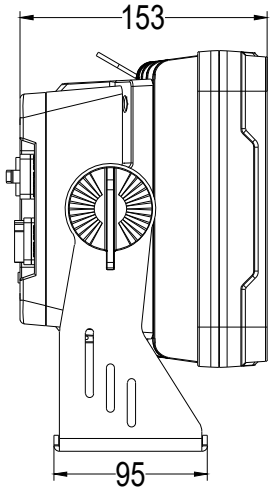
153
95

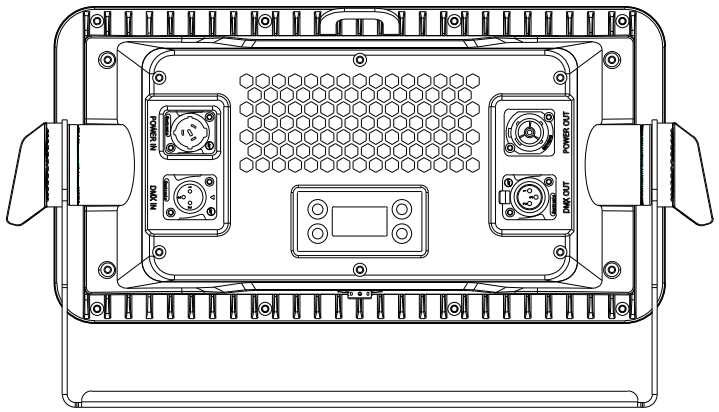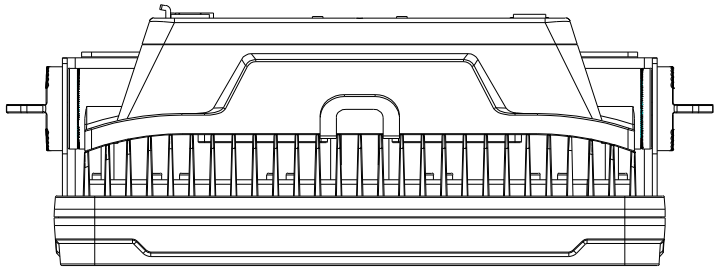
POWER IN
DMX IN
POWER OUT
DMX OUT