LED Flush Mount



Surface Mount



Pendant

Line Drawing

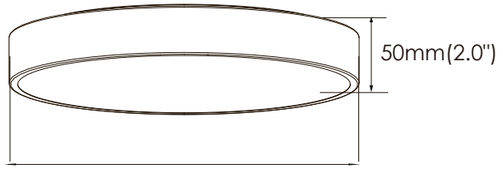

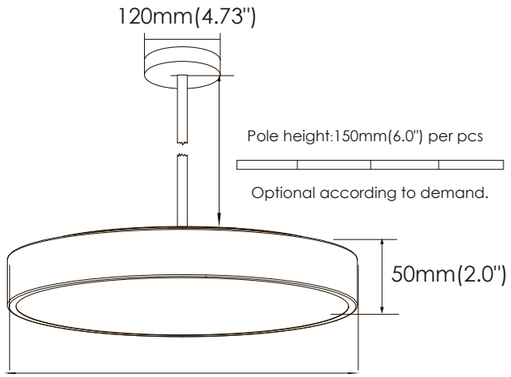

Specification

Size	Wattage	5CCT	CRI	Dim	Voltage	Certification
12inch	15W	2700K-5000K	80	Triac-Dim	120V	ETL/CETL
14inch	25W	2700K-5000K	80	Triac-Dim	120V	ETL/CETL
16inch	30W	2700K-5000K	80	Triac-Dim	120V	ETL/CETL
20inch	35W	2700K-5000K	80	Triac-Dim	120V	ETL/CETL
24inch	45W	2700K-5000K	80	Triac-Dim	120V	ETL/CETL

Driver Solution

· ETL/CETL Listed UL1598

· Voltage 120V

· Wide Temperature range(TC) from 140°F to +185°F

Finished

Black White

Gerneral Specifications

Hz	60
Input PF	0.8
Max Effiency	75-80lm/W
Dim mode	Dimmable 100%-10%
CRI	80
Turn on time	<0.5s
Chassic	Steel
Diffuser	PC
LED Model NO.	2835
USE	Damp Rated

Installation

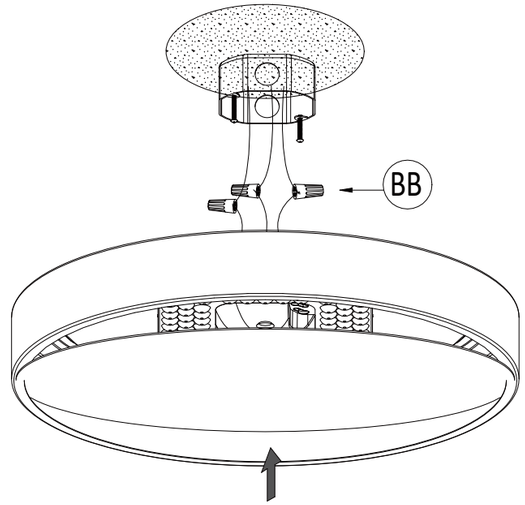

Application

