LED Glass Flush Mount



Line Drawing

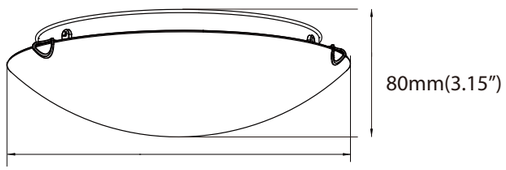

Luminous intensity distribution diagram

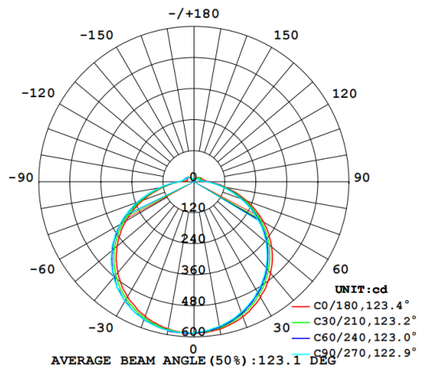

Finished

White

Specification

Size	Power	CCT	Lumens	CRI	Dim	Voltage	Certification	PCS/CTN	CTN Size
12"	15W	5CCT	1000LM	80/90	Non-Dimming	220V	CE Standard	4PCS/CTN	/
16"	25W	5CCT	1500LM	80/90	Non-Dimming	220V	CE Standard	4PCS/CTN	/
16"	35W	5CCT	2100LM	80/90	Non-Dimming	220V	CE Standard	4PCS/CTN	/

Driver Solution LED Flush Mounts

· CE Standard

· Voltage 220V

· Wide Temperature range(TC) from 140°F to +185°F

Gerneral Specifications

Input Voltage / Frequency	220V
Input PF	0.90
Max Effiency	70-80lm/W
Dim mode	Non-Dimming
CRI	80/90
Turn on time	<0.5s
Chassic	Steel
Diffuser	glass
Oparatng Tempereture Range	-25~45°C
LED Model NO.	2835 9V 1W
USE	Damp Rated

Installation

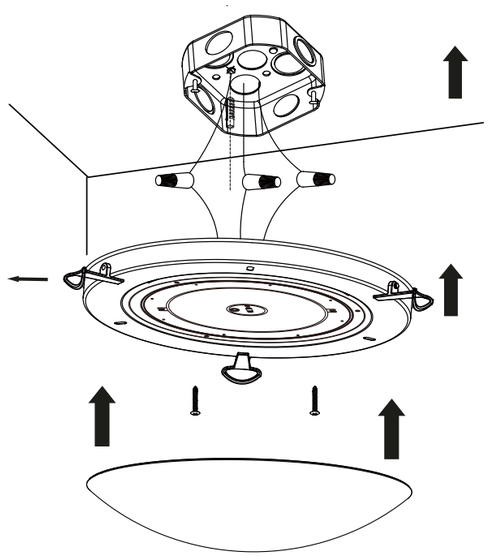

Application

