LED Flush Mount



Line Drawing

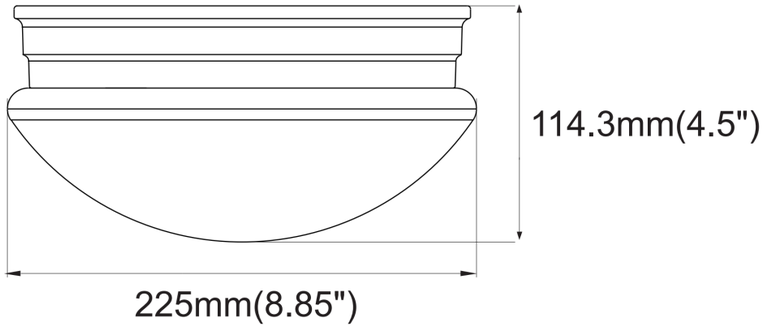

Specification

Size	Wattage	5CCT	CRI	Dim	Voltage	Certification
9inch	15W	27K/30K/35K/40K/5000K	80	Triac-dim	120V	ETL/CETL

Driver Solution

· ETL/CETL Listed UL1598

· Voltage 120V

· Wide Temperature range(TC) from 140°F to +185°F

Finished

BN

Gerneral Specifications

Hz	60
Input PF	0.8
Max Effiency	75-80lm/W
Dim mode	Triac-Dimmable
CRI	80
Turn on time	<0.5s
Chassic	Steel
Diffuser	PS
LED Model NO.	2835
USE	Damp Rated

Installation

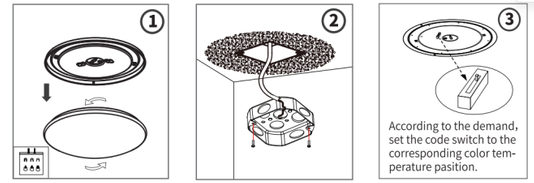

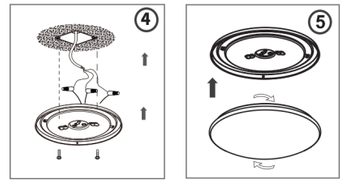

Application



