Worbest®

LED Vanity Light

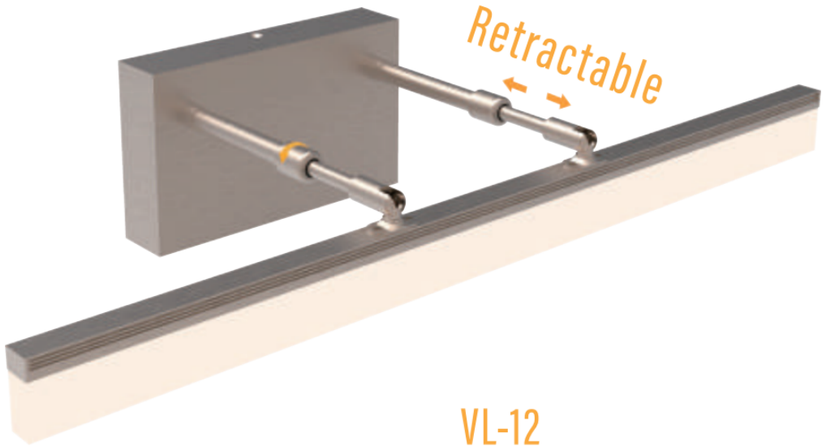

VL-12

Line Drawing

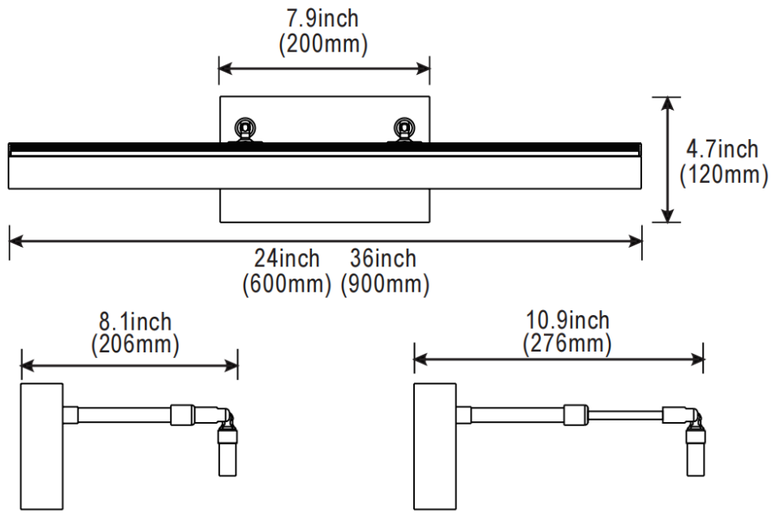

Specification

Size	Wattage	1CCT	Lumen	CRI	Dim	Voltage	Certification
24inch	20W	27K/30K/35K/40K/5000K	1400lm	80	Triac Dim	120V	ETL/CETL
36inch	25W	27K/30K/35K/40K/5000K	1750lm	80	Triac Dim	120V	ETL/CETL

Solution

· ETL/CETL Listed 1598

· Voltage 120V

Finished

BN

Gerneral Specifications

Hz	60
Input PF	0.9
Max Effiency	75-80lm/W
Dim mode	Triac-Dimmable
CRI	80
Turn on time	<0.5s
Chassic	Steel
Diffuser	PMMA
LED Model NO.	2835
USE	Damp Rated

Installation

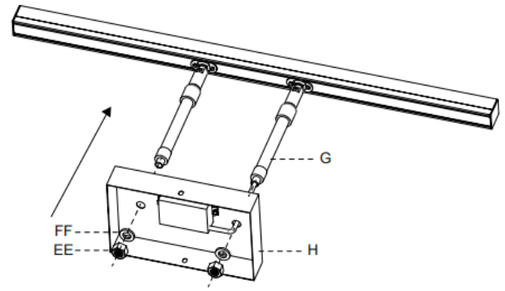

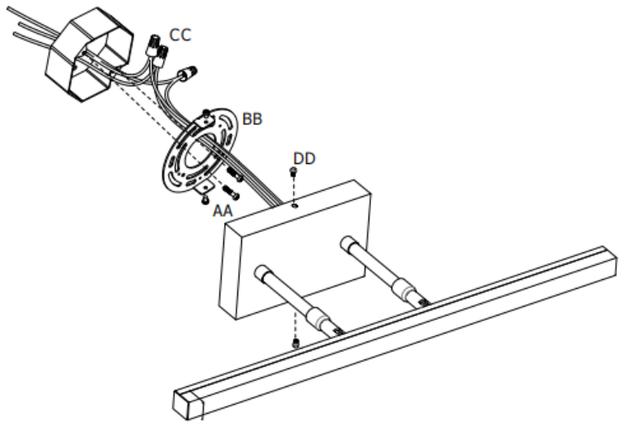

Application



