LED Vanity Light



Line Drawing

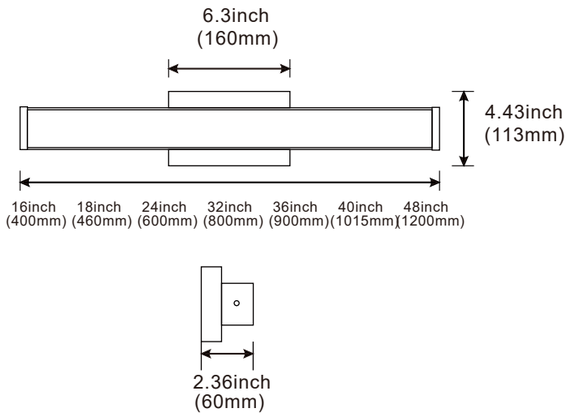

Specification

Size	Wattage	5CCT	CRI	Dim	Voltage	Certification
16inch	18W	27K/30K/35K/40K/5000K	80	Triac-Dim	120V	ETL/CETL
18inch	20W	27K/30K/35K/40K/5000K	80	Triac-Dim	120V	ETL/CETL
24inch	25W	27K/30K/35K/40K/5000K	80	Triac-Dim	120V	ETL/CETL
32inch	30W	27K/30K/35K/40K/5000K	80	Triac-Dim	120V	ETL/CETL
36inch	30W	27K/30K/35K/40K/5000K	80	Triac-Dim	120V	ETL/CETL
40inch	35W	27K/30K/35K/40K/5000K	80	Triac-Dim	120V	ETL/CETL
48inch	35W	27K/30K/35K/40K/5000K	80	Triac-Dim	120V	ETL/CETL

Driver Solution

- ETL/CETL Listed UL1598
- Voltage 120V
- Wide Temperature range(TC) from 140°F to +185°F

Finished

- White
- Black
- BN
- CH

Gerneral Specifications

Hz	60
Input PF	0.8
Max Effiency	75-80lm/W
Dim mode	Triac-Dim
CRI	80
Turn on time	<0.5s
Chassic	Steel
Diffuser	PMMA
LED Model NO.	2835
USE	Damp Rated

Application



