SIEMENS

Data sheet 3RW5076-6TB14

Figure similar

SIRIUS soft starter 200-480 V 470 A, 110-250 V AC Screw terminals Thermistor input

product brand name	SIRIUS
product category	Hybrid switching devices
product designation	Soft starter
product type designation	3RW50
manufacturer's article number	
● of standard HMI module usable	3RW5980-0HS01
● of high feature HMI module usable	3RW5980-0HF00
● of communication module PROFINET standard usable	3RW5980-0CS00
● of communication module PROFIBUS usable	3RW5980-0CP00
● of communication module Modbus TCP usable	3RW5980-0CT00
● of communication module Modbus RTU usable	3RW5980-0CR00
● of communication module Ethernet/IP	3RW5980-0CE00
● of circuit breaker usable at 400 V	3VA2580-6HN32-0AA0; Type of assignment 1, Iq = 65 kA
● of circuit breaker usable at 500 V	3VA2580-6HN32-0AA0; Type of assignment 1, Iq = 65 kA
● of the gG fuse usable up to 690 V	2x3NA3365-6; Type of coordination 1, Iq = 65 kA
● of full range R fuse link for semiconductor protection usable up to 690 V	3NE1 436-2; Type of coordination 2, Iq = 65 kA
● of back-up R fuse link for semiconductor protection usable up to 690 V	3NE3 340-8; Type of coordination 2, Iq = 65 kA
● of line contactor usable up to 480 V	3RT1076
● of line contactor usable up to 690 V	3RT1076
General technical data	
starting voltage [%]	30 ... 100 %
stopping voltage [%]	50 %; non-adjustable
start-up ramp time of soft starter	0 ... 20 s
ramp-down time of soft starter	0 ... 20 s
current limiting value [%] adjustable	130 ... 700 %
certificate of suitability	
● CE marking	Yes
● UL approval	Yes
● CSA approval	Yes
product component	
● HMI-High Feature	No
● is supported HMI-Standard	Yes
● is supported HMI-High Feature	Yes
product feature integrated bypass contact system	Yes
number of controlled phases	2
buffering time in the event of power failure	
● for main current circuit	100 ms
● for control circuit	100 ms

Subject to change without notice
© Copyright Siemens

insulation voltage rated value	600 V
degree of pollution	3, acc. to IEC 60947-4-2
impulse voltage rated value	6 kV
blocking voltage of the thyristor maximum	1 600 V
service factor	1
surge voltage resistance rated value	6 kV
maximum permissible voltage for protective separation	
● between main and auxiliary circuit	600 V
shock resistance	15 g / 11 ms, from 12 g / 11 ms with potential contact lifting
utilization category according to IEC 60947-4-2	AC-53a
reference code according to IEC 81346-2	Q
Substance Prohibitance (Date)	09/23/2019
SVHC substance name	Blei - 7439-92-1 Bleimonoxid (Bleioxid) - 1317-36-8 2-Methyl-1-(4-methylthiophenyl)-2-morpho - 71868-10-5 2,2',6,6'-Tetrabrom-4,4'-isopropylidendi - 79-94-7 "1,6,7,8,9,14,15,16,17,17,18,18-Dodecach - - Dicyclohexylphthalat (DCHP) - 84-61-7 Dodekamethylcyclohexasiloxan (D6) - 540-97-6
product function	
● ramp-up (soft starting)	Yes
● ramp-down (soft stop)	Yes
● Soft Torque	Yes
● adjustable current limitation	Yes
● pump ramp down	Yes
● intrinsic device protection	Yes
● motor overload protection	Yes; Full motor protection (thermistor motor protection and electronic motor overload protection)
● evaluation of thermistor motor protection	Yes; Type A PTC or Klixon / Thermoclick
● auto-RESET	Yes
● manual RESET	Yes
● remote reset	Yes; By turning off the control supply voltage
● communication function	Yes
● operating measured value display	Yes; Only in conjunction with special accessories
● error logbook	Yes; Only in conjunction with special accessories
● via software parameterizable	No
● via software configurable	Yes
● **PROFIenergy**	Yes; in connection with the PROFINET Standard communication module
● voltage ramp	Yes
● torque control	No
● analog output	No
Power Electronics	
operational current	
● at 40 °C rated value	470 A
● at 50 °C rated value	416 A
● at 60 °C rated value	380 A
operating voltage	
● rated value	200 ... 480 V
relative negative tolerance of the operating voltage	-15 %
relative positive tolerance of the operating voltage	10 %
operating power for 3-phase motors	
● at 230 V at 40 °C rated value	132 kW
● at 400 V at 40 °C rated value	250 kW
Operating frequency 1 rated value	50 Hz
Operating frequency 2 rated value	60 Hz
relative negative tolerance of the operating frequency	-10 %
relative positive tolerance of the operating frequency	10 %
adjustable motor current	
● at rotary coding switch on switch position 1	200 A
● at rotary coding switch on switch position 2	218 A
● at rotary coding switch on switch position 3	236 A
● at rotary coding switch on switch position 4	254 A
● at rotary coding switch on switch position 5	272 A

Subject to change without notice
© Copyright Siemens

● at rotary coding switch on switch position 6	290 A
● at rotary coding switch on switch position 7	308 A
● at rotary coding switch on switch position 8	326 A
● at rotary coding switch on switch position 9	344 A
● at rotary coding switch on switch position 10	362 A
● at rotary coding switch on switch position 11	380 A
● at rotary coding switch on switch position 12	398 A
● at rotary coding switch on switch position 13	416 A
● at rotary coding switch on switch position 14	434 A
● at rotary coding switch on switch position 15	452 A
● at rotary coding switch on switch position 16	470 A
● minimum	200 A
minimum load [%]	15 %; Relative to smallest settable Ie
power loss [W] for rated value of the current at AC	
● at 40 °C after startup	56 W
● at 50 °C after startup	44 W
● at 60 °C after startup	37 W
power loss [W] at AC at current limitation 350 %	
● at 40 °C during startup	5 344 W
● at 50 °C during startup	4 438 W
● at 60 °C during startup	3 876 W
type of the motor protection	Electronic, tripping in the event of thermal overload of the motor
Control circuit/ Control	
type of voltage of the control supply voltage	AC
control supply voltage at AC	
● at 50 Hz	110 ... 250 V
● at 60 Hz	110 ... 250 V
relative negative tolerance of the control supply voltage at AC at 50 Hz	-15 %
relative positive tolerance of the control supply voltage at AC at 50 Hz	10 %
relative negative tolerance of the control supply voltage at AC at 60 Hz	-15 %
relative positive tolerance of the control supply voltage at AC at 60 Hz	10 %
control supply voltage frequency	50 ... 60 Hz
relative negative tolerance of the control supply voltage frequency	-10 %
relative positive tolerance of the control supply voltage frequency	10 %
control supply current in standby mode rated value	30 mA
holding current in bypass operation rated value	105 mA
inrush current by closing the bypass contacts maximum	2.2 A
inrush current peak at application of control supply voltage maximum	12.2 A
duration of inrush current peak at application of control supply voltage	2.2 ms
design of the overvoltage protection	Varistor
design of short-circuit protection for control circuit	4 A gG fuse (Icu=1 kA), 6 A quick-acting fuse (Icu=1 kA), C1 miniature circuit breaker (Icu= 600 A), C6 miniature circuit breaker (Icu= 300 A); Is not part of scope of supply
Inputs/ Outputs	
number of digital inputs	1
● **number of digital outputs**	3
● number of digital outputs not parameterizable	2
digital output version	2 normally-open contacts (NO) / 1 changeover contact (CO)
number of analog outputs	0
switching capacity current of the relay outputs	
● at AC-15 at 250 V rated value	3 A
● at DC-13 at 24 V rated value	1 A
Installation/ mounting/ dimensions	
mounting position	with vertical mounting surface +/-90° rotatable, with vertical mounting surface +/- 22.5° tiltable to the front and back

Subject to change without notice
© Copyright Siemens

fastening method	screw fixing
height	230 mm
width	160 mm
depth	282 mm
required spacing with side-by-side mounting	
● forwards	10 mm
● backwards	0 mm
● upwards	100 mm
● downwards	75 mm
● at the side	5 mm
weight without packaging	7.3 kg
Connections/ Terminals	
type of electrical connection	
● for main current circuit	busbar connection
● for control circuit	screw-type terminals
width of connection bar maximum	35 mm; with connection cover 3RT1966-4EA1 maximum length 45 mm
wire length for thermistor connection	
● with conductor cross-section = 0.5 mm² maximum	50 m
● with conductor cross-section = 1.5 mm² maximum	150 m
● with conductor cross-section = 2.5 mm² maximum	250 m
type of connectable conductor cross-sections for main contacts for box terminal	
● using the front clamping point solid	95 ... 300 mm²
● using the front clamping point finely stranded with core end processing	70 ... 240 mm²
● using the front clamping point finely stranded without core end processing	70 ... 240 mm²
● using the front clamping point stranded	95 ... 300 mm²
● using the back clamping point solid	120 ... 240 mm²
● r box terminal using the back clamping point	250 ... 500 kcmil
● using both clamping points solid	min. 2x 70 mm², max. 2x 240 mm²
● using both clamping points finely stranded with core end processing	min. 2x 50 mm², max. 2x 185 mm²
● using both clamping points finely stranded without core end processing	min. 2x 50 mm², max. 2x 185 mm²
● using both clamping points stranded	min. 2x 70 mm², max. 2x 240 mm²
● using the back clamping point finely stranded with core end processing	120 ... 185 mm²
● using the back clamping point finely stranded without core end processing	120 ... 185 mm²
● using the back clamping point stranded	120 ... 240 mm²
type of connectable conductor cross-sections	
● for AWG cables for main current circuit solid	2/0 ... 500 kcmil
● for DIN cable lug for main contacts stranded	50 ... 240 mm²
● for DIN cable lug for main contacts finely stranded	70 ... 240 mm²
type of connectable conductor cross-sections	
● for control circuit solid	1x (0.5 ... 4.0 mm²), 2x (0.5 ... 2.5 mm²)
● for control circuit finely stranded with core end processing	1x (0.5 ... 2.5 mm²), 2x (0.5 ... 1.5 mm²)
● for AWG cables for control circuit solid	1x (20 ... 12), 2x (20 ... 14)
wire length	
● between soft starter and motor maximum	800 m
● at the digital inputs at AC maximum	1 000 m
tightening torque	
● for main contacts with screw-type terminals	14 ... 24 N·m
● for auxiliary and control contacts with screw-type terminals	0.8 ... 1.2 N·m
tightening torque [lbf·in]	
● for main contacts with screw-type terminals	124 ... 210 lbf·in
● for auxiliary and control contacts with screw-type terminals	7 ... 10.3 lbf·in
Ambient conditions	
installation altitude at height above sea level maximum	5 000 m; derating as of 1000 m, see Manual
ambient temperature	

Subject to change without notice
© Copyright Siemens

● during operation	-25 ... +60 °C; Please observe derating at temperatures of 40 °C or above
● during storage and transport	-40 ... +80 °C
environmental category	
● during operation according to IEC 60721	3K6 (no ice formation, only occasional condensation), 3C3 (no salt mist), 3S2 (sand must not get into the devices), 3M6
● during storage according to IEC 60721	1K6 (only occasional condensation), 1C2 (no salt mist), 1S2 (sand must not get inside the devices), 1M4
● during transport according to IEC 60721	2K2, 2C1, 2S1, 2M2 (max. fall height 0.3 m)
EMC emitted interference	acc. to IEC 60947-4-2: Class A
Communication/ Protocol	
communication module is supported	
● PROFINET standard	Yes
● EtherNet/IP	Yes
● Modbus RTU	Yes
● Modbus TCP	Yes
● PROFIBUS	Yes
UL/CSA ratings	
manufacturer's article number	
● of the fuse	
— usable for Standard Faults up to 575/600 V according to UL	Type: Class L, max. 1600 A; Iq = 30 kA
— usable for High Faults up to 575/600 V according to UL	Type: Class L, max. 1200 A; Iq = 100 kA
operating power [hp] for 3-phase motors	
● at 200/208 V at 50 °C rated value	150 hp
● at 220/230 V at 50 °C rated value	150 hp
● at 460/480 V at 50 °C rated value	350 hp
Electrical Safety	
protection class IP on the front according to IEC 60529	IP00; IP20 with cover
touch protection on the front according to IEC 60529	finger-safe, for vertical contact from the front with cover
ATEX	
Safety Integrity Level (SIL) according to IEC 61508 relating to ATEX	SIL1
PFHD with high demand rate according to EN 62061 relating to ATEX	9E-6 1/h
PFDavg with low demand rate according to IEC 61508 relating to ATEX	0.09
hardware fault tolerance according to IEC 61508 relating to ATEX	0
T1 value for proof test interval or service life according to IEC 61508 relating to ATEX	3 a
certificate of suitability	
● ATEX	Yes
● IECEx	Yes
● UKEX	Yes
Certificates/ approvals	

General Product Approval

CSA CCC UKCA EG-Konf. Confirmation UL

General Product Approval	EMV	For use in hazardous locations			Test Certificates
EAC	KC	IECEx	ATEX	other ex-certificates	Type Test Certificates/Test Report

Marine / Shipping	other

Subject to change without notice
© Copyright Siemens

ABS LRS PRS

Confirmation

Further information

Information on the packaging
https://support.industry.siemens.com/cs/ww/en/view/109813875
Information- and Downloadcenter (Catalogs, Brochures,…)
https://www.siemens.com/ic10
Industry Mall (Online ordering system)
https://mall.industry.siemens.com/mall/en/en/Catalog/product?mlfb=3RW5076-6TB14
Cax online generator
http://support.automation.siemens.com/WW/CAXorder/default.aspx?lang=en&mlfb=3RW5076-6TB14
Service&Support (Manuals, Certificates, Characteristics, FAQs,...)
https://support.industry.siemens.com/cs/ww/en/ps/3RW5076-6TB14
Image database (product images, 2D dimension drawings, 3D models, device circuit diagrams, EPLAN macros, ...)
http://www.automation.siemens.com/bilddb/cax_de.aspx?mlfb=3RW5076-6TB14&lang=en
Characteristic: Tripping characteristics, I²t, Let-through current
https://support.industry.siemens.com/cs/ww/en/ps/3RW5076-6TB14/char
Characteristic: Installation altitude
http://www.automation.siemens.com/bilddb/index.aspx?view=Search&mlfb=3RW5076-6TB14&objecttype=14&gridview=view1
Simulation Tool for Soft Starters (STS)
https://support.industry.siemens.com/cs/ww/en/view/101494917

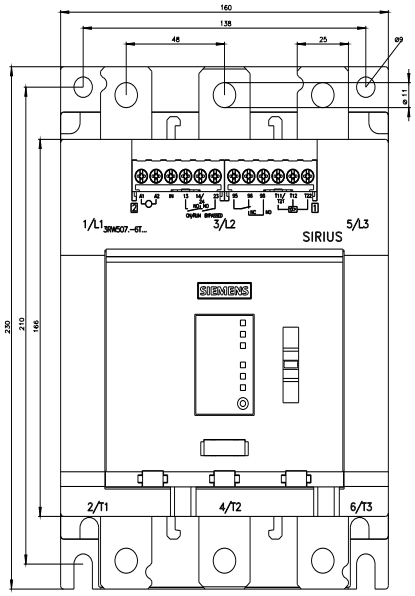

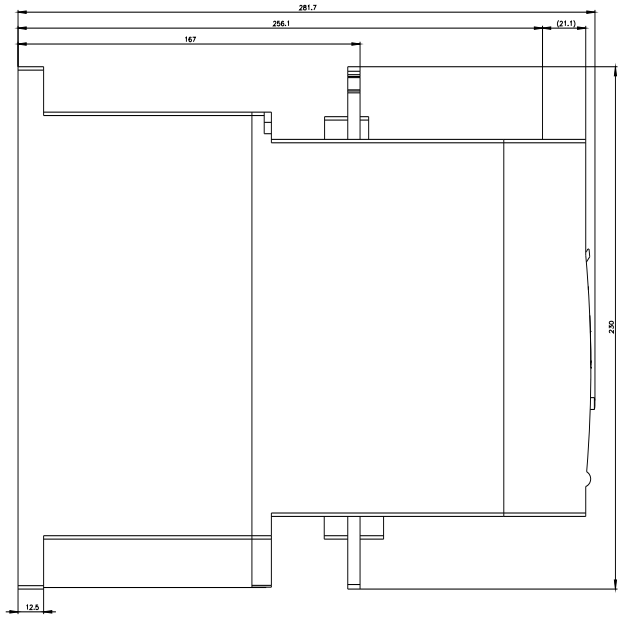

Subject to change without notice
© Copyright Siemens

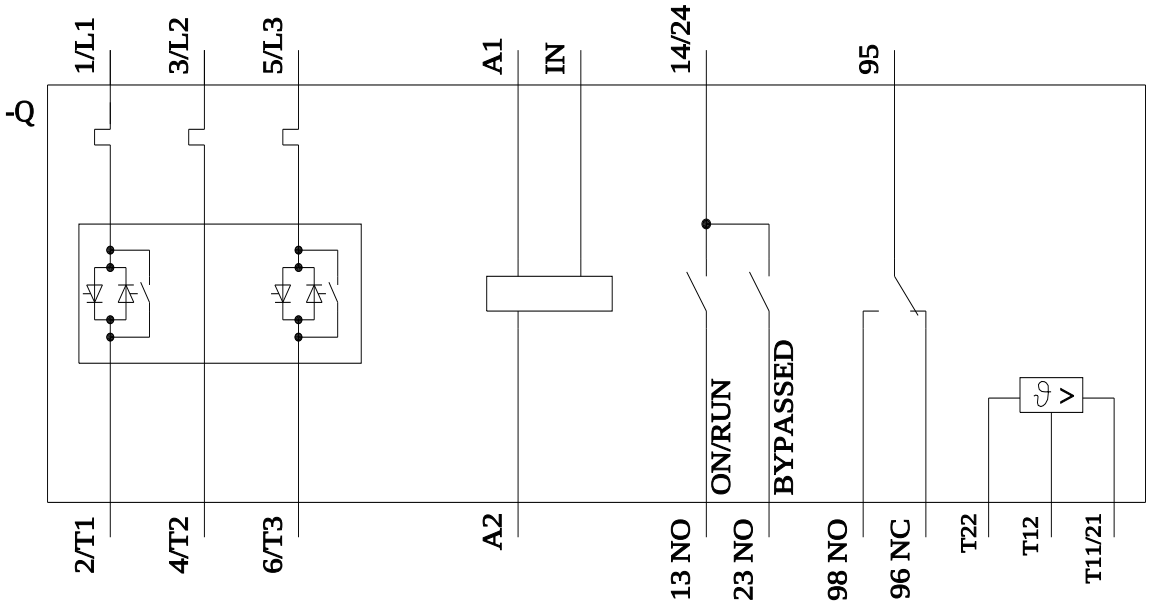

last modified: 8/24/2023

Subject to change without notice
© Copyright Siemens

Subject to change without notice
© Copyright Siemens