SIEMENS

Data sheet 3RW5143-1XC14-0S

SIRIUS soft starter 200-480 V 210 A, 110-250 V AC screw terminals without bypass, analog output with HMI standard

manufacturer's article number	
● of standard HMI module usable	3RW5980-0HS00
● of high feature HMI module usable	3RW5980-0HF00
● of communication module PROFINET standard usable	3RW5980-0CS00
● of communication module PROFIBUS usable	3RW5980-0CP00
● of communication module Modbus RTU usable	3RW5980-0CR00
● of circuit breaker usable at 400 V	3VA2325-7MN32-0AA0; Type of coordination 1, Iq = 65 kA, CLASS 10
● of circuit breaker usable at 500 V	3VA2325-7MN32-0AA0; Type of coordination 1, Iq = 65 kA, CLASS 10
● of circuit breaker usable at 400 V at inside-delta circuit	3VA2440-7MN32-0AA0; Type of coordination 1, Iq = 65 kA, CLASS 10
● of circuit breaker usable at 500 V at inside-delta circuit	3VA2440-7MN32-0AA0; Type of coordination 1, Iq = 65 kA, CLASS 10
● of the gG fuse usable up to 690 V	2x3NA3354-6; Type of coordination 1, Iq = 65 kA
● of the gG fuse usable at inside-delta circuit up to 500 V	2x3NA3354-6; Type of coordination 1, Iq = 65 kA
● of full range R fuse link for semiconductor protection usable up to 690 V	3NE1230-2; Type of coordination 2, Iq = 65 kA
● of back-up R fuse link for semiconductor protection usable up to 690 V	3NE3333; Type of coordination 2, (soft starter in conjunction with the associated protective device circuit breaker/fuse), Iq = 65 kA
General technical data	
starting voltage [%]	30 ... 100 %
stopping voltage [%]	50 %; non-adjustable
start-up ramp time of soft starter	0 ... 20 s
ramp-down time of soft starter	0 ... 20 s
current limiting value [%] adjustable	130 ... 700 %
product component is supported	
● HMI-Standard	Yes
● HMI-High Feature	Yes
product feature integrated bypass contact system	No
number of controlled phases	3
buffering time in the event of power failure	
● for main current circuit	100 ms
● for control circuit	100 ms
insulation voltage rated value	480 V
degree of pollution	3, acc. to IEC 60947-4-2
impulse voltage rated value	6 V
blocking voltage of the thyristor maximum	1 400 V
service factor	1
surge voltage resistance rated value	6 kV
maximum permissible voltage for protective separation	
● between main and auxiliary circuit	480 V
shock resistance	15 g / 11 ms, from 12 g / 11 ms with potential contact lifting
utilization category according to IEC 60947-4-2	AC-53b
reference code according to IEC 81346-2	Q

Subject to change without notice
© Copyright Siemens

SVHC substance name	Lead - 7439-92-1 Lead monoxide (lead oxide) - 1317-36-8 2-methyl-1-(4-methylthiophenyl)-2-morpholinopropan-1-one - 71868-10-5 2,2',6,6'-tetrabromo-4,4'-isopropylidenediphenol - 79-94-7 1,6,7,8,9,14,15,16,17,17,18,18-Dodecachloropentacyclo[12.2.1.16,9.02,13.05,10]octadeca-7,15-diene (“Dechlorane Plus”™) covering any of its individual anti- and syn-isomers or any combination thereof - - Dibutylbis(pentane-2,4-dionato-O,O')tin - 22673-19-4 Dodecamethylcyclohexasiloxane (D6) - 540-97-6
product function	
● ramp-up (soft starting)	Yes
● ramp-down (soft stop)	Yes
● Soft Torque	Yes
● adjustable current limitation	Yes
● intrinsic device protection	Yes
● motor overload protection	Yes
● inside-delta circuit	Yes
● auto-RESET	Yes
● manual RESET	Yes
● remote reset	Yes; By turning off the control supply voltage
● communication function	Yes
● operating measured value display	Yes; with optional HMI
● error logbook	Yes
● via software parameterizable	No
● via software configurable	No
● **firmware update**	Yes
● **removable terminal for control circuit**	Yes
● voltage ramp	Yes
● analog output	Yes; 4 ... 20 mA (default) / 0 ... 10 V (parameterizable with High Feature HMI)
Power Electronics	
operational current	
● at 40 °C rated value	210 A
● at 50 °C rated value	186 A
● at 60 °C rated value	170 A
operational current at inside-delta circuit	
● at 40 °C rated value	364 A
● at 50 °C rated value	322 A
● at 60 °C rated value	294 A
operating voltage	
● rated value	200 ... 480 V
● at inside-delta circuit rated value	200 ... 480 V
relative negative tolerance of the operating voltage	-15 %
relative positive tolerance of the operating voltage	10 %
relative negative tolerance of the operating voltage at inside-delta circuit	-15 %
relative positive tolerance of the operating voltage at inside-delta circuit	10 %
operating power for 3-phase motors	
● at 230 V at 40 °C rated value	55 W
● at 230 V at inside-delta circuit at 40 °C rated value	110 W
● at 400 V at 40 °C rated value	110 W
● at 400 V at inside-delta circuit at 40 °C rated value	200 W
Operating frequency 1 rated value	50 Hz
Operating frequency 2 rated value	60 Hz
relative negative tolerance of the operating frequency	-10 %
relative positive tolerance of the operating frequency	10 %
adjustable motor current	
● at rotary coding switch on switch position 1	90 A
● at rotary coding switch on switch position 2	98 A
● at rotary coding switch on switch position 3	106 A
● at rotary coding switch on switch position 4	114 A
● at rotary coding switch on switch position 5	122 A
● at rotary coding switch on switch position 6	130 A

Subject to change without notice
© Copyright Siemens

● at rotary coding switch on switch position 7	138 A
● at rotary coding switch on switch position 8	146 A
● at rotary coding switch on switch position 9	154 A
● at rotary coding switch on switch position 10	162 A
● at rotary coding switch on switch position 11	170 A
● at rotary coding switch on switch position 12	178 A
● at rotary coding switch on switch position 13	186 A
● at rotary coding switch on switch position 14	194 A
● at rotary coding switch on switch position 15	202 A
● at rotary coding switch on switch position 16	210 A
● minimum	90 A
adjustable motor current	
● for inside-delta circuit at rotary coding switch on switch position 1	156 A
● for inside-delta circuit at rotary coding switch on switch position 2	170 A
● for inside-delta circuit at rotary coding switch on switch position 3	184 A
● for inside-delta circuit at rotary coding switch on switch position 4	197 A
● for inside-delta circuit at rotary coding switch on switch position 5	211 A
● for inside-delta circuit at rotary coding switch on switch position 6	225 A
● for inside-delta circuit at rotary coding switch on switch position 7	239 A
● for inside-delta circuit at rotary coding switch on switch position 8	253 A
● for inside-delta circuit at rotary coding switch on switch position 9	267 A
● for inside-delta circuit at rotary coding switch on switch position 10	281 A
● for inside-delta circuit at rotary coding switch on switch position 11	294 A
● for inside-delta circuit at rotary coding switch on switch position 12	308 A
● for inside-delta circuit at rotary coding switch on switch position 13	322 A
● for inside-delta circuit at rotary coding switch on switch position 14	336 A
● for inside-delta circuit at rotary coding switch on switch position 15	350 A
● for inside-delta circuit at rotary coding switch on switch position 16	364 A
● at inside-delta circuit minimum	156 A
minimum load [%]	15 %; Relative to smallest settable Ie
power loss [W] for rated value of the current at AC	
● at 40 °C after startup	14 W
● at 50 °C after startup	14 W
● at 60 °C after startup	14 W
power loss [W] at AC at current limitation 350 %	
● at 40 °C during startup	3 562 W
● at 50 °C during startup	2 979 W
● at 60 °C during startup	2 617 W
Control circuit/ Control	
type of voltage of the control supply voltage	AC
control supply voltage at AC	
● at 50 Hz	110 ... 250 V
● at 60 Hz	110 ... 250 V
relative negative tolerance of the control supply voltage at AC at 50 Hz	-15 %
relative positive tolerance of the control supply voltage at AC at 50 Hz	10 %
relative negative tolerance of the control supply voltage at AC at 60 Hz	-15 %
relative positive tolerance of the control supply voltage at AC at 60 Hz	10 %

Subject to change without notice
© Copyright Siemens

control supply voltage frequency	50 ... 60 Hz
relative negative tolerance of the control supply voltage frequency	-10 %
relative positive tolerance of the control supply voltage frequency	10 %
control supply current in standby mode rated value	30 mA
inrush current peak at application of control supply voltage maximum	12.2 A
duration of inrush current peak at application of control supply voltage	2.2 ms
design of the overvoltage protection	Varistor
design of short-circuit protection for control circuit	4 A gG fuse (Icu=1 kA), 6 A quick-acting fuse (Icu=1 kA), C1 miniature circuit breaker (Icu= 600 A), C6 miniature circuit breaker (Icu= 300 A); Is not part of scope of supply
Inputs/ Outputs	
number of digital inputs	1
● **number of digital outputs**	3
● number of digital outputs not parameterizable	2
digital output version	2 normally-open contacts (NO) / 1 changeover contact (CO)
number of analog outputs	1
switching capacity current of the relay outputs	
● at AC-15 at 250 V rated value	3 A
● at DC-13 at 24 V rated value	1 A
Installation/ mounting/ dimensions	
mounting position	with vertical mounting surface +/-90° rotatable, with vertical mounting surface +/- 22.5° tiltable to the front and back
fastening method	screw fixing
height	417 mm
width	210 mm
depth	203 mm
required spacing with side-by-side mounting	
● forwards	10 mm
● backwards	0 mm
● upwards	100 mm
● downwards	75 mm
● at the side	5 mm
weight without packaging	9.75 kg
Connections/ Terminals	
type of electrical connection	
● for main current circuit	busbar connection
● for control circuit	screw-type terminals
width of connection bar maximum	45 mm
type of connectable conductor cross-sections	
● for DIN cable lug for main contacts stranded	2x (50 ... 240 mm²)
● for DIN cable lug for main contacts finely stranded	2x (70 ... 240 mm²)
type of connectable conductor cross-sections	
● for control circuit solid	1x (0.5 ... 4.0 mm²), 2x (0.5 ... 2.5 mm²)
● for control circuit finely stranded with core end processing	1x (0.5 ... 2.5 mm²), 2x (0.5 ... 1.5 mm²)
wire length	
● between soft starter and motor maximum	800 m
● at the digital inputs at AC maximum	100 m
tightening torque	
● for main contacts with screw-type terminals	14 ... 24 N·m
● for auxiliary and control contacts with screw-type terminals	0.8 ... 1.2 N·m
tightening torque [lbf·in]	
● for main contacts with screw-type terminals	124 ... 210 lbf·in
● for auxiliary and control contacts with screw-type terminals	7 ... 10.3 lbf·in
Ambient conditions	
installation altitude at height above sea level maximum	5 000 mm; Derating as of 1000 m, see catalog
ambient temperature	

Subject to change without notice
© Copyright Siemens

● during operation	-25 ... +60 °C; Please observe derating at temperatures of 40 °C or above
● during storage and transport	-40 ... +80 °C
environmental category	
● during operation according to IEC 60721	3K6 (no ice formation, only occasional condensation), 3C3 (no salt mist), 3S2 (sand must not get into the devices), 3M6
● during storage according to IEC 60721	1K6 (only occasional condensation), 1C2 (no salt mist), 1S2 (sand must not get inside the devices), 1M4
● during transport according to IEC 60721	2K2, 2C1, 2S1, 2M2 (max. fall height 0.3 m)

Communication/ Protocol

communication module is supported	
● PROFINET standard	Yes
● Modbus RTU	Yes
● PROFIBUS	Yes

Approvals Certificates

General Product Approval			EMV	Marine / Shipping
Confirmation			KC	

other

Confirmation

Further information

Information on the packaging
https://support.industry.siemens.com/cs/ww/en/view/109813875
Information- and Downloadcenter (Catalogs, Brochures,…)
https://www.siemens.com/ic10
Industry Mall (Online ordering system)
https://mall.industry.siemens.com/mall/en/en/Catalog/product?mlfb=3RW5143-1XC14-0S
Cax online generator
http://support.automation.siemens.com/WW/CAXorder/default.aspx?lang=en&mlfb=3RW5143-1XC14-0S
Service&Support (Manuals, Certificates, Characteristics, FAQs,...)
https://support.industry.siemens.com/cs/ww/en/ps/3RW5143-1XC14-0S
Image database (product images, 2D dimension drawings, 3D models, device circuit diagrams, EPLAN macros, ...)
http://www.automation.siemens.com/bilddb/cax_de.aspx?mlfb=3RW5143-1XC14-0S&lang=en
Characteristic: Tripping characteristics, I²t, Let-through current
https://support.industry.siemens.com/cs/ww/en/ps/3RW5143-1XC14-0S/char
Characteristic: Installation altitude
http://www.automation.siemens.com/bilddb/index.aspx?view=Search&mlfb=3RW5143-1XC14-0S&objecttype=14&gridview=view1
Simulation Tool for Soft Starters (STS)
https://support.industry.siemens.com/cs/ww/en/view/101494917

Subject to change without notice
© Copyright Siemens

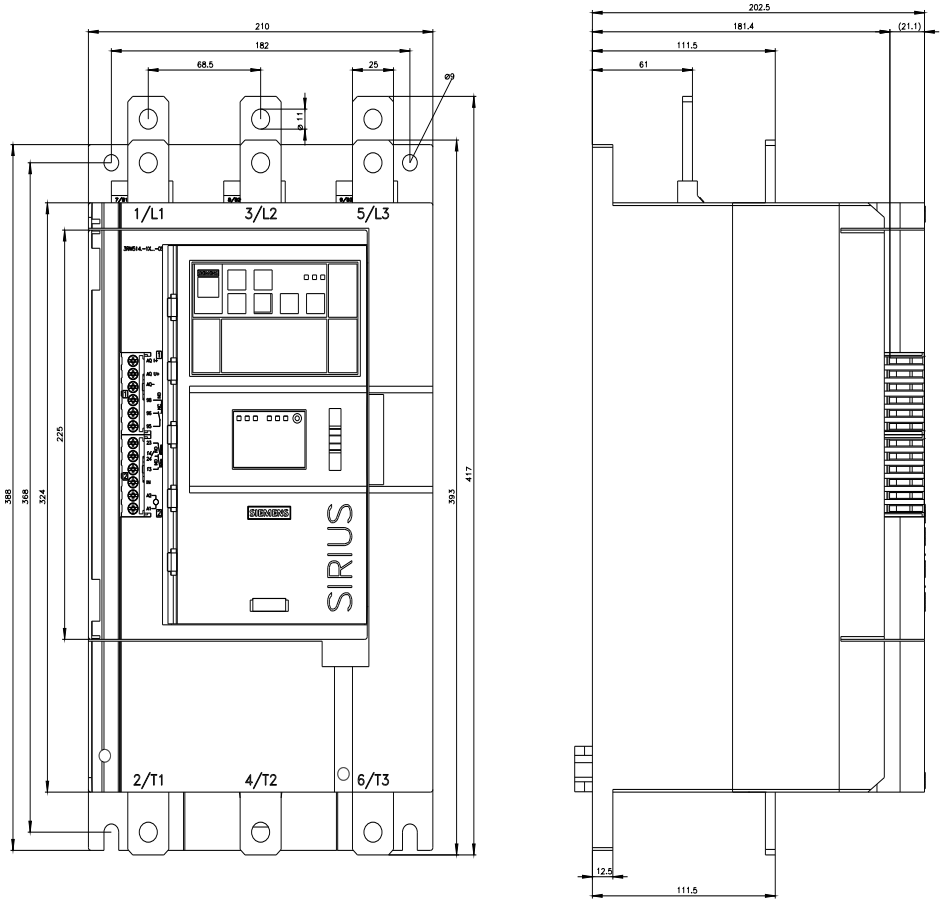

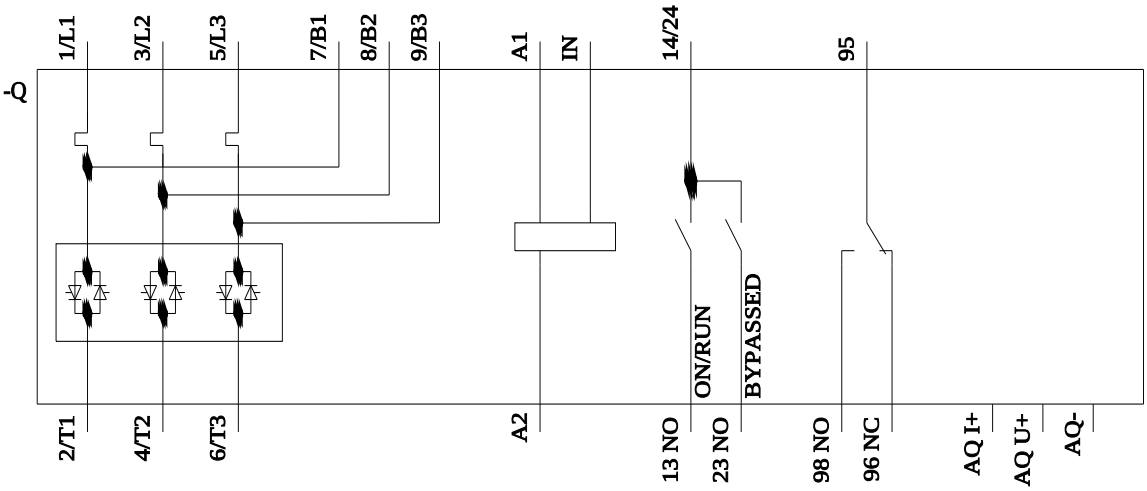

last modified: 3/11/2024

Subject to change without notice
© Copyright Siemens

Subject to change without notice
© Copyright Siemens

Subject to change without notice
© Copyright Siemens