SIEMENS

Data sheet 3LD2305-1TL11

SENTRON, Switch disconnector 3LD, main switch, 4-pole, Iu: 160 A, Operating power / at AC-23 A at 400 V: 75 kW, front-mounted, knob-operated mechanism, black, 4-hole mounting of the handle

Model	
product brand name	SENTRON
product designation	Switch disconnector
design of the product	Main switch
display version for switch position indicator manual operation	1 ON - 0 OFF
type of switch	front mounted
design of the actuating element	selector switch
color of the actuating element	black
design of handle	knob-operated mechanism, black
type of the driving mechanism motor drive	No
General technical data	
number of poles	4
size of switch disconnector	5
mechanical service life (operating cycles) typical	100 000
electrical endurance (operating cycles)	
● at AC-23 A at 690 V	6 000
operating frequency maximum	50 1/h
degree of pollution	3
Voltage	
insulation voltage rated value	690 V
surge voltage resistance rated value	8 kV
operating voltage	
● at AC rated value	690 V
operating frequency rated value	
● minimum	50 Hz
● maximum	60 Hz
Protection class	
protection class IP	IP65
degree of protection NEMA rating	1, 3R, 4X, 12
protection class IP on the front	IP65
Dissipation	
power loss [W] for rated value of the current at AC in hot operating state per pole	36 W
Main circuit	
operational current	
● at AC-21 at 690 V rated value	160 A
● at AC-21 A at 240 V rated value	160 A
● at AC-21 A at 400 V rated value	160 A
● at AC-21 A at 440 V rated value	160 A
● at AC-23 A at 400 V rated value	132 A

Subject to change without notice
© Copyright Siemens

operating power	
● at AC-23 A at 240 V rated value	75 kW
● at AC-23 A at 400 V rated value	75 kW
● at AC-23 A at 440 V rated value	75 kW
● at AC-23 A at 690 V rated value	45 kW
● at AC-3 at 240 V rated value	35 kW
● at AC-3 at 400 V rated value	50 kW
● at AC-3 at 690 V rated value	37 kW
Auxiliary circuit	
number of CO contacts for auxiliary contacts	0
number of NC contacts for auxiliary contacts	0
number of NO contacts for auxiliary contacts	0
operating voltage of auxiliary contacts at AC maximum	500 V
continuous current of the auxiliary contact rated value	10 A
insulation voltage of the auxiliary switch rated value	500 V
Suitability	
suitability for use	
● main switch	Yes
● switch disconnector	Yes
● EMERGENCY OFF switch	No
● safety switch	Yes
● maintenance/repair switch	Yes
Product details	
product feature can be locked into OFF position	Yes
accessories	
product extension optional	
● motor drive	No
● voltage trigger	No
number of connectable NC contacts for auxiliary contacts attachable maximum	3
number of connectable NO contacts for auxiliary contacts attachable maximum	3
number of connectable CO contacts for auxiliary contacts attachable maximum	0
number of bracket locks maximum	3
hasp thickness of the bracket locks	4 ... 6 mm
Short circuit	
conditional short-circuit current with line-side fuse protection	
● at 690 V by gG fuse rated value	50 kA
let-through current with closed switch	
● at 240 V for combination switch + gG fuse maximum	15 kA
● at 440 V for combination switch + gG fuse maximum	15 kA
● at 690 V for combination switch + gG fuse maximum permissible	15 kA
I2t value with closed switch	
● at 240 V for combination switch + gG fuse maximum	185 kA2.s
● at 440 V for combination switch + gG fuse maximum	185 kA2.s
● at 690 V for combination switch + gG fuse maximum	185 kA2.s
design of the fuse link	
● for short-circuit protection of the main circuit required	fuse gL/gG: 160 A
● for short-circuit protection of the auxiliary switch required	fuse gL/gG: 10 A
operational current of upstream fuse rated value	160 A
according UL	
operational current at AC according to UL 508/UL 60947-4-1 rated value	180 A
operating voltage at AC at 50/60 Hz according to UL 508/UL 60947-4-1 rated value	600 V
active power [hp] at AC at 480 V according to UL 508/UL 60947-4-1 rated value	75
active power [hp] at AC at 600 V according to UL 508/UL 60947-4-1 rated value	50
short-time withstand current (SCCR) at 600 V according to UL 508/UL 60947-4-1	10 kA

Subject to change without notice
© Copyright Siemens

continuous current of upstream fuse according to UL rated value	200 A
type of fuse according to UL	RK5
Connections	
AWG number as coded connectable conductor cross section solid maximum	
●	1
●	4/0
type of connectable conductor cross-sections for copper conductor	
● solid	1x (16 ...185mm²)
● finely stranded with core end processing	1x (16...150mm²)
● stranded	1x (16...185mm²)
type of connectable conductor cross-sections for auxiliary contacts	
● solid	lateral auxiliary switch 2x (0,75 ... 2,5mm²), 1x 4mm²; front auxiliary switch 1x (0,75 ... 2,5mm²)
● finely stranded with core end processing	lateral auxiliary switch 2x (0,75 ... 1,5mm²), 1x 2,5mm²; front auxiliary switch 1x 2,5mm²
● stranded	lateral auxiliary switch 2x (0,75 ... 2,5mm²), 1x 4mm²; front auxiliary switch 1x (0,75 ... 2,5mm²)
type of electrical connection	
● for main current circuit	box terminal
● for auxiliary contacts	connection terminals
Mechanical Design	
height	169 mm
width	112 mm
depth	94 mm
type of device	fixed mounting
fastening method	Built-in unit fixed-mounted version
fastening method	
● 4-hole front mounting	Yes
● front mounting with central attachment	No
● rail mounting	No
net weight	2 609 g
Environmental conditions	
ambient temperature during operation	
● minimum	-25 °C
● maximum	55 °C
ambient temperature during storage	
● minimum	-25 °C
● maximum	55 °C

Approvals Certificates

General Product Approval

Confirmation

other		Environment
Confirmation	Miscellaneous	Environmental Confirmations

Further information

Information on the packaging
https://support.industry.siemens.com/cs/ww/en/view/109813875
Information- and Downloadcenter (Catalogs, Brochures,…)
http://www.siemens.com/lowvoltage/catalogs
Industry Mall (Online ordering system)
https://mall.industry.siemens.com/mall/en/en/Catalog/product?mlfb=3LD2305-1TL11

Subject to change without notice
© Copyright Siemens

Service&Support (Manuals, Certificates, Characteristics, FAQs,...)
https://support.industry.siemens.com/cs/ww/en/ps/3LD2305-1TL11
Image database (product images, 2D dimension drawings, 3D models, device circuit diagrams, ...)
http://www.automation.siemens.com/bilddb/cax_en.aspx?mlfb=3LD2305-1TL11
CAx-Online-Generator
http://www.siemens.com/cax
Tender specifications
http://www.siemens.com/specifications

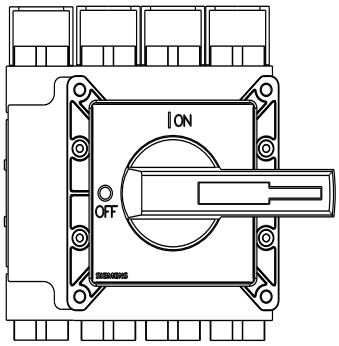

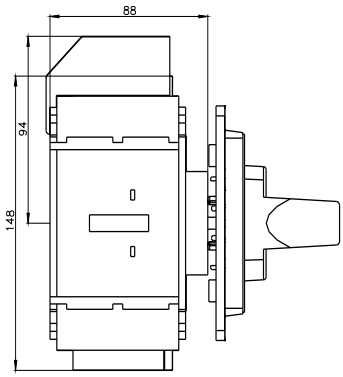

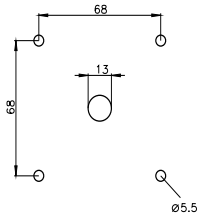

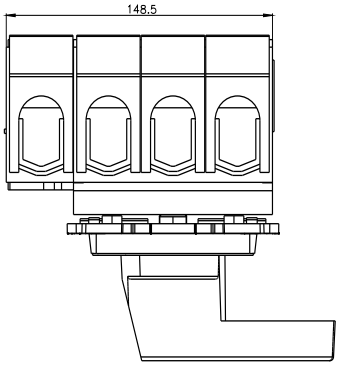

Subject to change without notice
© Copyright Siemens

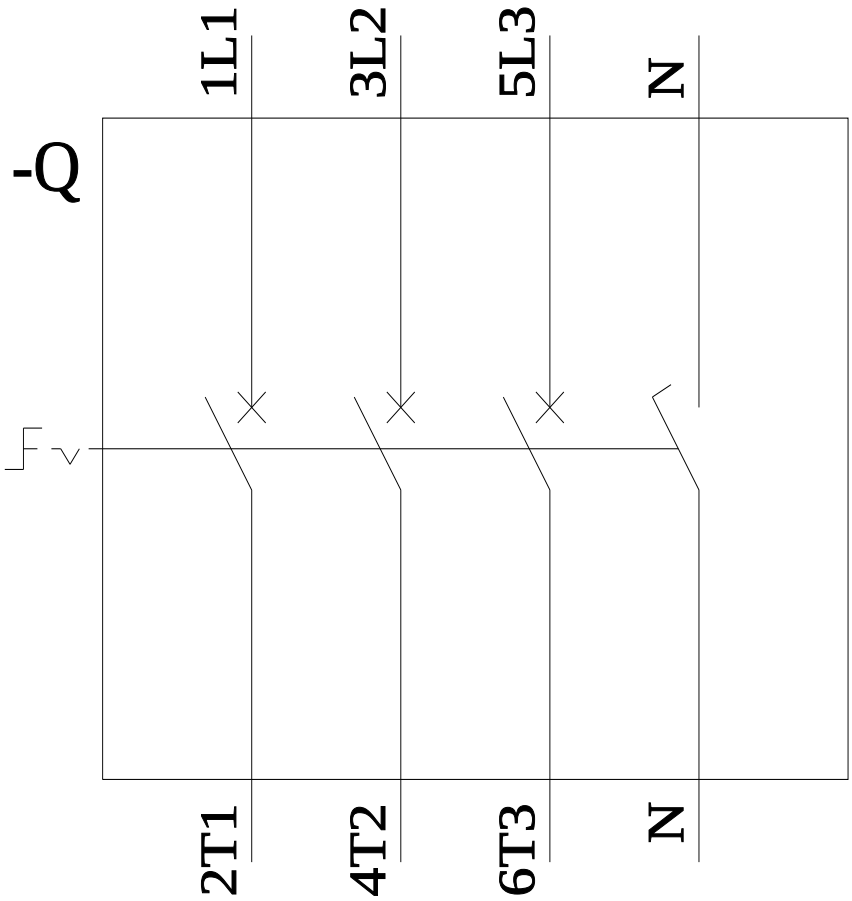

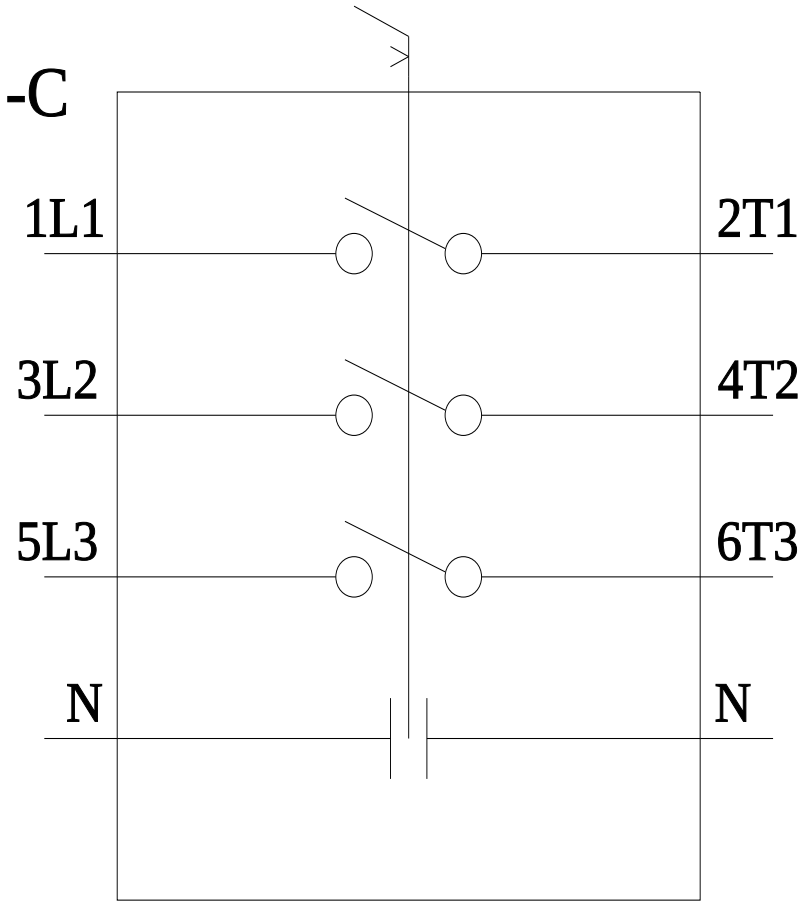

last modified: 6/20/2023

Subject to change without notice
© Copyright Siemens

Subject to change without notice
© Copyright Siemens