SIEMENS

Data sheet 3KD2232-2ME10-0

Switch disconnector 32 A, Size 1, 3-pole Front operating mechanism left Complete unit with direct operating mechanism gray Box terminal

Model	
product brand name	SENTRON
product designation	3KD switch disconnector
design of the product	Switch
display version for switch position indicator manual operation	ON-OFF-TEST
design of the actuating element	Long rotary knob
type of the driving mechanism	Front operating mechanism
type of the driving mechanism motor drive	No
General technical data	
number of poles	3
type of device	fixed mounting
size of switch disconnector	1
mechanical service life (operating cycles) typical	15 000
electrical endurance (operating cycles)	
● at AC-23 A at 690 V	6 000
● at DC-23 A at 440 V	1 500
I2t value	
● with closed switch at 1000 V for combination switch +gG/aM SITOR fuse maximum	2 331 $A^2 \cdot s$
● of the fuse at 500 V maximum permissible	26 505 $A^2 \cdot s$
● of the gG fuse at 690 V maximum permissible	24 005 $A^2 \cdot s$
● of the gG/aM SITOR fuse at 1000 V maximum permissible	6 000 $A^2 \cdot s$
● of the molded case circuit breaker at 415 V maximum permissible	480 000 $A^2 \cdot s$
position of the switch operating mechanism	at the left end
overvoltage in percent relative to the operating voltage at AC at 400, 500, 690 V at 50/60 Hz	10 %
overvoltage category	III
degree of pollution	3
Voltage	
operating voltage with current paths in series	
● with degree of pollution 2 at DC rated value	440 V / 3
● with degree of pollution 3 at DC rated value	440 V / 3
insulation voltage	
● rated value	1 000 V
surge voltage resistance rated value	8 kV
Protection class	
protection class IP	IP20
protection class IP	
● with closed switch with cover or cable lug cover	IP20

Subject to change without notice
© Copyright Siemens

● on the front	IP20
Dissipation	
power loss [W]	
● with conventional rated thermal current per pole	0.4 W
● with conventional rated thermal current per device	1.2 W
● for rated value of the current at AC in hot operating state per pole	0.4 W
Main circuit	
operating power	
● at AC-23 A at 500 V rated value	18.5 kW
operational current rated value	32 A
Auxiliary circuit	
number of connected NC contacts for auxiliary contacts	0
number of connected NO contacts for auxiliary contacts	0
number of connected CO contacts for auxiliary contacts	0
number of CO contacts for auxiliary contacts	4
number of NC contacts for auxiliary contacts	0
number of NO contacts for auxiliary contacts	0
Suitability	
suitability for use	
● main switch	Yes
● switch disconnector	Yes
● EMERGENCY OFF switch	No
● safety switch	Yes
● maintenance/repair switch	Yes
Product details	
product component	
● trip indicator	No
● voltage trigger	No
● undervoltage release	No
● undervoltage release with leading contact	No
product extension auxiliary switch	Yes
product extension optional	
● motor drive	No
● voltage trigger	No
Short circuit	
short-time withstand current (Icw) at 1000 V AC/440 V DC limited to 1 s rated value	3 kA
short-circuit current making capacity (Icm) for switch disconnector	
● at 1000 V AC without fuse link rated value minimum	7 kA
● at DC 440 V without fuse link rated value minimum	7 kA
● without fuse link rated value minimum	7 kA
conditional short-circuit current with line-side fuse protection	
● at 415 V by molded case circuit breaker rated value	36 kA
● at 500 V by gG fuse rated value	100 kA
● at 690 V by gG fuse rated value	100 kA
Connections	
type of connectable conductor cross-sections with flexible busbar	2x (0,8x9 mm²)
type of connectable conductor cross-sections	
● for copper busbar	'1 x (2 x 9 mm²)
type of connectable conductor cross-sections for copper conductor	
● solid	1x (1 ... 16 mm²)
● finely stranded with core end processing	1x (1 ... 35 mm²)
● stranded	1x (6 ... 35 mm²)
type of electrical connection for main current circuit	box terminal
Mechanical Design	
height	119 mm
width	94 mm
depth	87 mm

Subject to change without notice
© Copyright Siemens

fastening method	Screw fixing and standard rail mounting 35 mm
fastening method	
● 4-hole front mounting	No
● front mounting with central attachment	No
● rail mounting	Yes
mounting position	any
net weight	822 g

Environmental conditions

ambient temperature during operation	
● minimum	-25 °C
● maximum	70 °C
ambient temperature during storage	
● minimum	-50 °C
● maximum	80 °C

Certificates

reference code according to IEC 81346-2	Q

Approvals Certificates

General Product Approval					Declaration of Conformity
CCC	Confirmation	VDE	Miscellaneous	EAC	UKCA

Declaration of Conformity	Test Certificates	Marine / Shipping		other	
EG-Konf.	Type Test Certificates/Test Report	LRS		Miscellaneous	Confirmation

Environment
Environmental Confirmations

Further information

Siemens has decided to exit the Russian market (see here).
https://press.siemens.com/global/en/pressrelease/siemens-wind-down-russian-business
Siemens is working on the renewal of the current EAC certificates.
Please contact your local Siemens office on the status of validity of the EAC certification if you intend to import or offer to supply these products to an EAC relevant market (other than the sanctioned EAEU member states Russia or Belarus).
Information on the packaging
https://support.industry.siemens.com/cs/ww/en/view/109813875
Information- and Downloadcenter (Catalogs, Brochures,…)
http://www.siemens.com/lowvoltage/catalogs
Industry Mall (Online ordering system)
https://mall.industry.siemens.com/mall/en/en/Catalog/product?mlfb=3KD2232-2ME10-0
Service&Support (Manuals, Certificates, Characteristics, FAQs,...)
https://support.industry.siemens.com/cs/ww/en/ps/3KD2232-2ME10-0
Image database (product images, 2D dimension drawings, 3D models, device circuit diagrams, ...)
http://www.automation.siemens.com/bilddb/cax_en.aspx?mlfb=3KD2232-2ME10-0
CAx-Online-Generator
http://www.siemens.com/cax
Tender specifications
http://www.siemens.com/specifications

Subject to change without notice
© Copyright Siemens

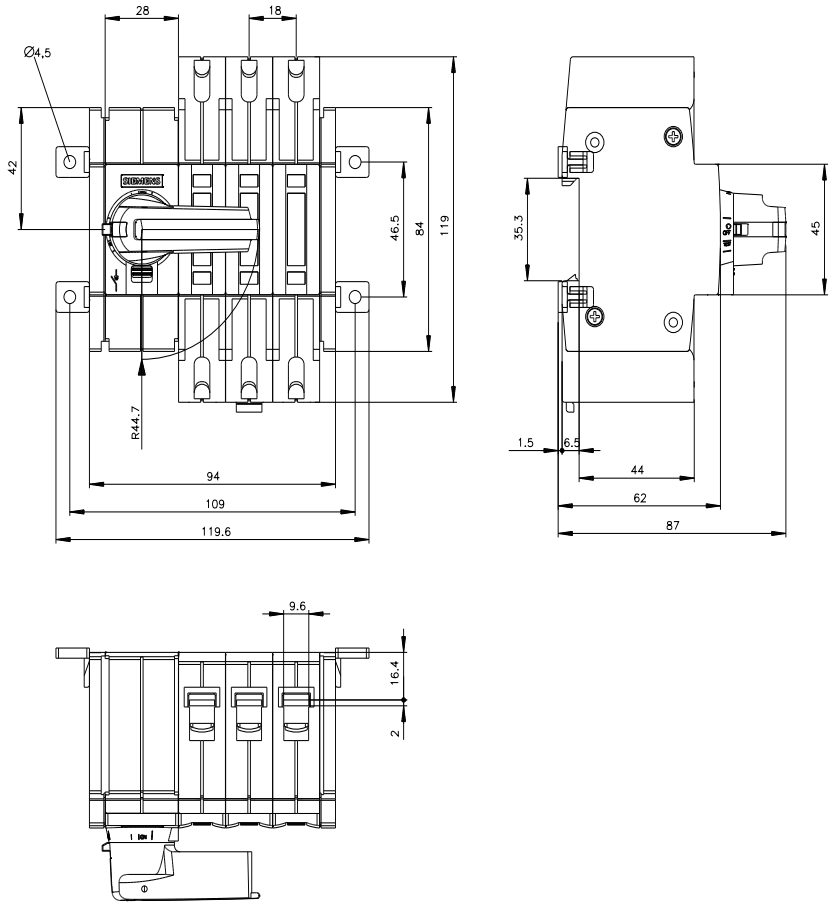

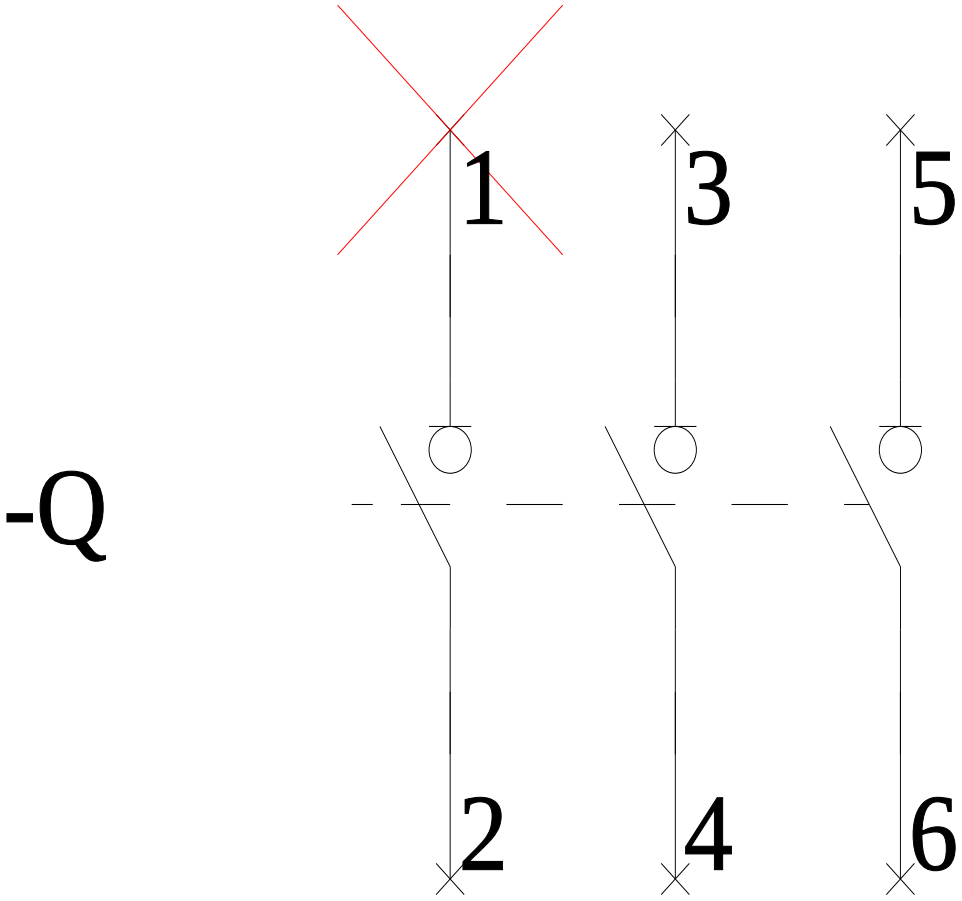

Subject to change without notice
© Copyright Siemens

-CR

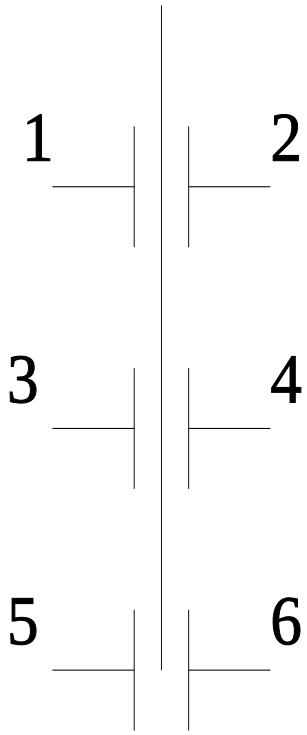

last modified: 3/13/2021

Subject to change without notice
© Copyright Siemens

Subject to change without notice
© Copyright Siemens