SIEMENS

ACVATIX™

2-port control ball valve & actuators, PN 16, with internally threaded connection

MDB461..AI, MLB461..AI

For use in heating, ventilation, and air conditioning plants as control or shutoff valve. In closed circuits.

- Ball valve body made of brass, ball and stem made of stainless steel
- DN 15...50
- k_{vs} 6.3...63 m^3/h
- Connections with internal threading Rp per ISO 7-1
- Electromotoric rotary actuators without spring return
- Operation voltage AC 24 V, Modulating control
- Pre-wired with 0.9 m long connection cables.

Features

- Moderately price:
  Optimized flow rates mean smaller ball valves can be selected. Low torque means you can combine them with small, less expensive rotary actuators.
- High life expectancy:
  Maintenance-free construction, also thanks to low friction stem and polished ball made of stainless steel.
- Simple mounting:
  The brackets, pre-mounted on the actuators, means you can mount them on the ball valves without tools.

Technical design

Ball valve design

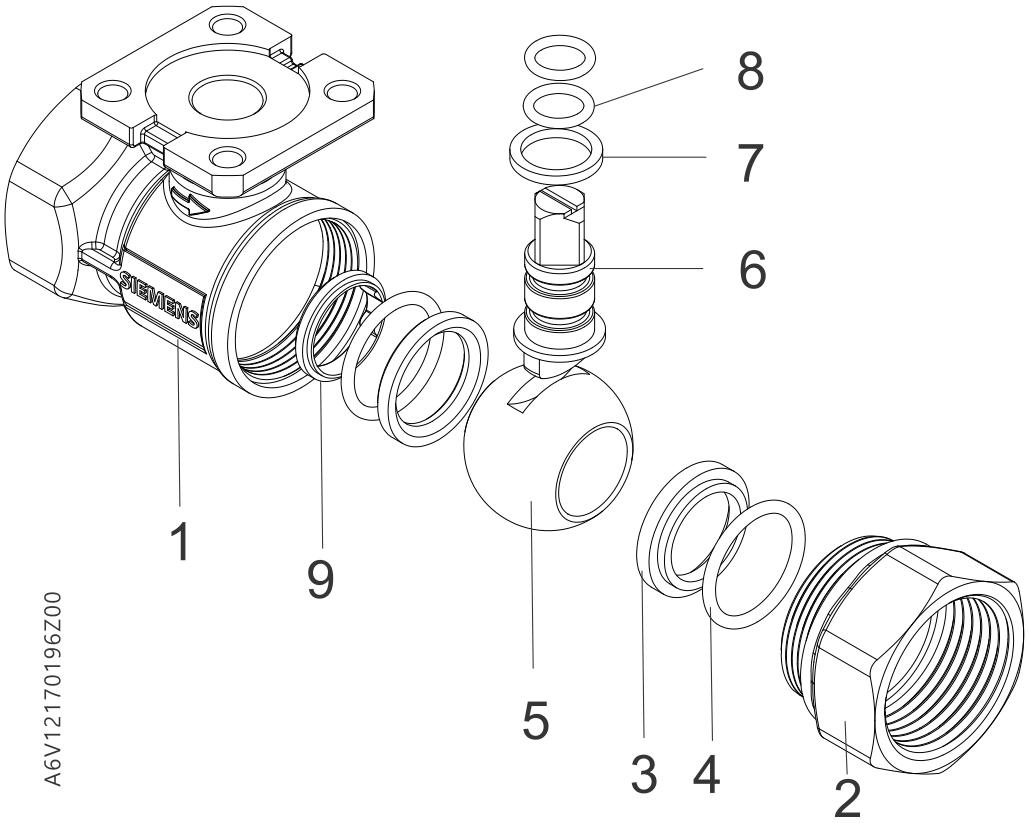

1	Housing	2	Internally threaded connection
3	Seat	4	O-ring seal
5	Marble	6	Stem, squared
7	Slide clutch	8	O-ring seal
9	Flow plate		

Sizing

Flow diagram:

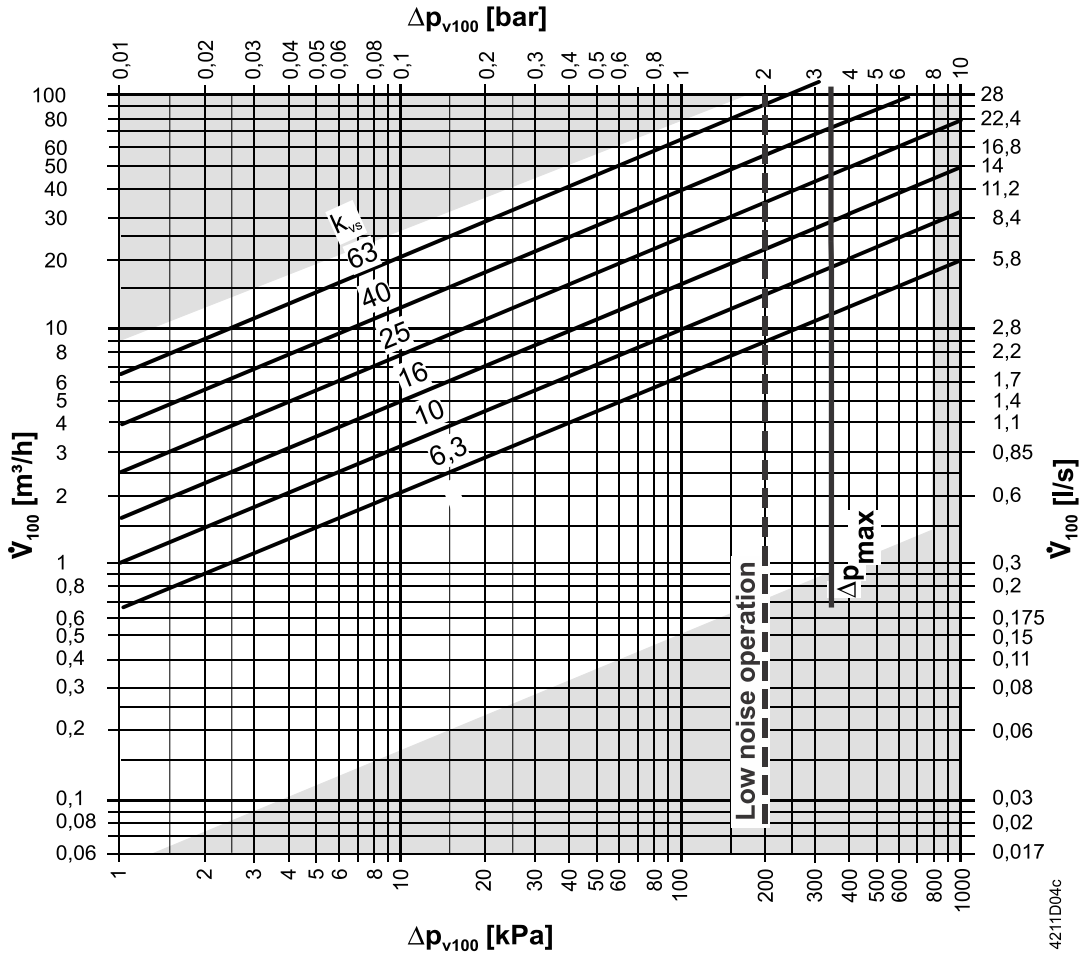

———		Δp_{max} for MDB461..AI, MLB461..AI, for details, see table on Type summary
Δp_{max}	=	Maximum permissible differential pressure over the ball valve, valid for the entire positioning range of the ball valve rotary actuator unit; if low noise operation is desired, we recommend a maximum permissible differential pressure of 200 kPa
Δp_{v100}	=	Differential pressure over the fully opened ball valve and over the control path at a volume flow V_{100}
$\dot{V}_{100}$	=	Volume flow through the fully opened ball valve
100 kPa	=	1 bar ≈ 10 mWS
1 m^3/h	=	0.278 l/s water at 20 °C

Ball valve characteristic curve

Flow rate k_v / k_{vs}	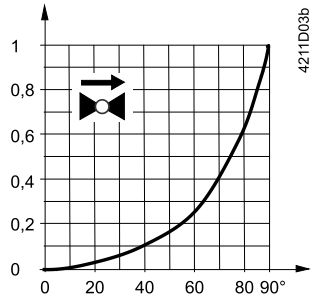
	Rotational angle

Flow characteristics	
0…100 %	-> A — AB equal percentage, n_{gl} = 3 per VDI / VDE 2173

Cavitation

Cavitation increases wear and tear of the ball and seat and results in unwanted noise. Cavitation can be prevented by not exceeding the differential pressures as per the flow diagram and maintaining the static pressures depicted below.

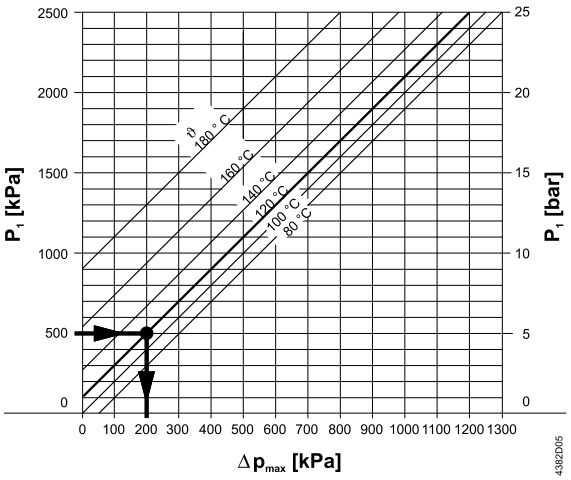

Δp_{max}	=	Differential pressure at a nearly closed ball valve to largely avoid cavitation
P_1	=	Static pressure at the ball valve inlet
P_3	=	Static pressure at the ball valve outlet
M		Pump
ϑ		Water temperature

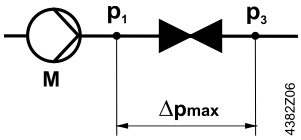

Example with hot water:

Pressure p_1 at ball valve inlet: 500 kPa (5 bar)

Water temperature: 120 °C

The above diagram clearly indicates that the maximum permissible differential pressure is Δp_{max} → 200 kPa (2 bar) at a nearly closed ball valve.

Note on chilled water applications

To prevent cavitation in chilled water circuits, sufficient counter pressure must be supplied to the ball valve outlet, e.g. using an additional butterfly valve downstream of the ball valve. Maximum permissible differential pressure over the ball valve: See 80 °C curve in the diagram.

Operating pressure and operating temperature

Liquids:

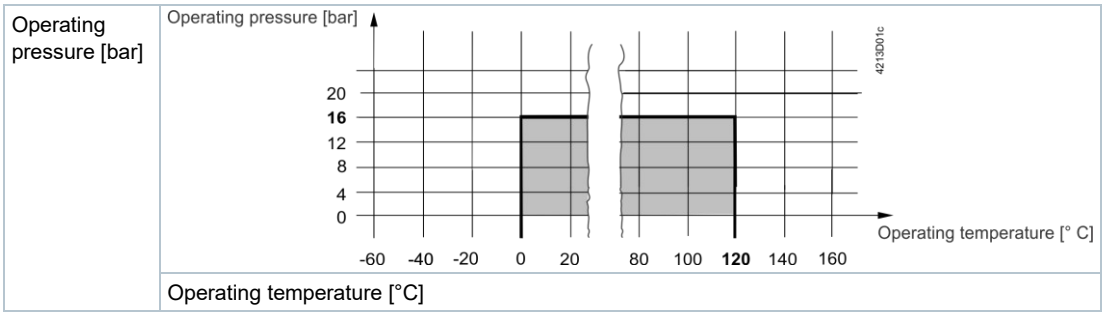

Operating pressure and medium temperature per IS0 7005
(Observe all local and applicable laws).

Actuator function

Type	
Control type	Modulating control
Rotary direction	Clockwise or counter-clockwise direction depends.. ..on the setting of the rotary direction DIL switch clockwise / counter-clockwise
	NC (normally closed) ball valve
	DIL 2 set to “counter-clockwise” Flow = 0 % at Y = 0 V Flow = 100 % at Y = 10 V
	NO (normally open) ball valve
	DIL 2 set to “clockwise” Flow = 100 % at Y = 0 V Flow = 0 % at Y = 10 V
Position indication: Mechanical	Rotary angle position indication by a position indicator/hand lever.
Position indication: Electrical	Output voltage U = DC 0...10 V is generated proportional to the rotary angle. U depends on the rotary direction of the DIL switch setting.
Manual adjustment	The rotary actuator can be manually adjusted by pressing the gear train disengagement button.

Type summary

Type	Stock number	DN	k_{vs} [m³/h]	Δp_{max} [kPa]	Δp_s [kPa]	Operating voltage	Positioning signal	Positioning time	Spring return
MDB461.15-6.3AI	S55310-M113	15	6.3	350	1400	AC 24 V	DC 0...10 V	150s	No
MDB461.20-10AI	S55310-M114	20	10	350	1400				
MDB461.25-16AI	S55310-M115	25	16	350	1400				
MLB461.32-25AI	S55310-M116	32	25	350	1000				
MLB461.40-40AI	S55310-M117	40	40	350	800				
MLB461.50-63AI	S55310-M118	50	63	350	600				

DN = Nominal size

k_{vs} = Flow nominal value for chilled water (5…30 °C) through a fully opened ball valve at a differential pressure of 100 kPa (1 bar)

Δp_s = Maximum permissible differential pressure at which the motorized valve will close securely against the pressure (close off pressure)

Δp_{max} = Maximum permissible differential pressure across the valve's control path, valid for the entire actuating range of the motorized valve

Spare parts

Spart parts for	Valve		Actuator	
MDB461.15-6.3AI	VAI51.15-6.3	S55230-V204	GDB161.9E	S55499-D397
MDB461.20-10AI	VAI51.20-10	S55230-V206		
MDB461.25-16AI	VAI51.25-16	S55230-V208		
MLB461.32-25AI	VAI51.32-25	S55230-V210	GLB161.9E	S55499-D402
MLB461.40-40AI	VAI51.40-40	S55230-V212		
MLB461.50-63AI	VAI51.50-63	S55230-V214		

Ordering

Please indicate material, article type, order text, and quantity; example:

Type	Stock number	Order text	Quantity
MDB461.15-6.3AI	S55310-M113	Bundle with control ball valve and actuator for ball valve, PN16 DN15 Kvs 6.3 with AC/DC24V 5 Nm NSR 0/2...10V	2

Delivery

Ball valves, rotary actuators, are packed together without pre-mounting.

Product documentation

Title	Document ID
M..B461..AI Mounting instructions	A6V12170196
GDB..9E/GLB..9E Data sheet	CM2N4657
Product environmental declaration	A5W00153677

Related documents such as environmental declarations, CE declarations, etc., can be downloaded at the following Internet address:

http://siemens.com/bt/download

Safety

DANGER

There is a risk to operating personnel and device when working on the unit

Failure to comply with these safety notes can result in personal injury and damage to property from pipe pressure, electrical voltage, or device in operation.

▷ Note the following when servicing a ball valve/rotary actuator:

- Switch off both pump and operating voltage.
- Close shutoff valves.
- Release pressure in the pipes and allow them to cool down completely.
- Disconnect electrical connections from the terminals as needed.
- The rotary actuator must be properly installed prior to recommissioning the ball valve.

CAUTION

National safety regulations

Failure to comply with national safety regulations may result in personal injury and property damage.

- Observe national provisions and comply with the appropriate safety regulations.

Engineering

We recommend installing the ball valve on return water side since temperatures are lower on heating plants which increases the lifespan of the sealing gland on the stem.

Ensure there is no cavitation (see Cavitation).

A filter must be installed upstream of the ball valve to increase functional safety.

Permissible media

Using the ball valve together with potassium formate-based media can result in leakage over the stem to the outside. The reason is the high level of penetration at low surface tension of media based on potassium formate.

Siemens rejects any and all liability for damages or consequential damages resulting from the use of this media together with our ball valves.

Mounting

It is easy to assemble the ball valve and rotary actuator; it can be done at the construction site. No special tools or settings required.

Ball valve M..B461..AI is supplied together with mounting instructions A6V12170196

Mounting position

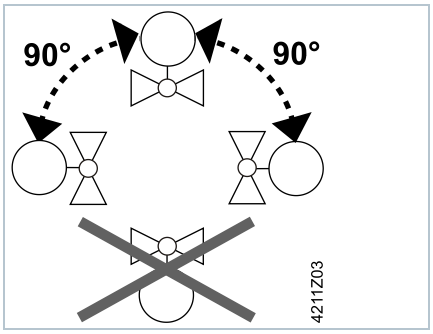

Pipe connection

Avoid leakage:

- Install fittings as per ISO 7-1. Ball valves (internal threading) = "Rp"; Piping (external threading) = "R".
- Do not use too much hemp or PTFE tape.
- Do not tighten pipe threading to the very end.
- Place the pliers/wrench on the ball valve union nut that is closer to the pipe to be tightened or loosened.

Flow direction

Make sure that the valve is mounted in the proper flow direction. A symbol ➡ is applied to the ball valve body:

Ball valve	Position as delivered	90 ° turned (clockwise)
M..B461..AI Control ball valve and actuator -	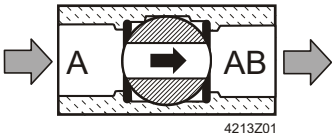	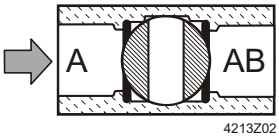
	A – AB = 100 %	A – AB = 0 %

Maintenance

Ball valves M..B461..AI are maintenance free.

Disposal

Do not dispose of the device as part of domestic waste.

- Special handling of individual components may be required by law or make ecological sense.
- Adhere to all local and currently applicable laws and regulations.

Warranty

Technical data on specific applications are valid only together with Siemens products listed under "Equipment combinations". Siemens rejects any and all warranties in the event that third-party products are used.

Technical data

Functional valve data		
PN class	PN 16 per EN1333	
Operating pressure	Per ISO 7005 within the permissible media temperature as per Operating pressure and operating temperature	
Ball valve characteristic curve Through-port: 0…100 %	Equal percentage, n_{gl} = 3 per VDI / VDE 2173	
Leakage through-port	<0.01 % of Kvs value	
Permissible media	Chilled water, low temperature hot water, hot water, water with antifreeze. Recommendation: Water treatment per VDI 2035 Note: See Permissible media	
Medium temperature	0…120 °C	
Rangeability Sv	> 100	
Rotational angle	90 °	
Materials	Ball valve body	Brass Hpb59-1
	Ball	Stainless steel (SUS303Cu)
	Stem	Stainless steel (SUS304)
	Valve seat / Sealing Gland	PTFE+Graphite

Functional actuator data	
Operating voltage / Frequency Power consumption Running Holding	AC 24 V ± 20 % / 50/60 Hz 3 VA / 2 W 1 W
Nominal torque Nominal rotary angle / Max. rotary angle Runtime for 90° rotary angle	5 Nm (MDB461..AI) / 10 Nm (MLB461..AI) 90° / 95° ± 2° 150 s
Positioning signal Input voltage Y (wires 8-2) Max. permissible input voltage	 DC 0...10 V DC 35 V, internally limited to DC 10 V
Positioning indication Output voltage U (wires 9-2) Max. output current	 DC 0...10 V DC ± 1 mA
Connection cable Cross-section Standard length	 0.75 mm^2 0.9 m
Degree of protection of housing	IP54 as per EN 60 529 (note mount. instructions)
Protection class	EN 60730 III
Rotational angle	90 °

Dimensions / Weight	
See Dimensions	
Internally threaded connection	Rp per ISO 7-1

General ambient conditions			
	Operation	Transport	Storage
Temperature	-15…+55 °C	-30...+65 °C	-15...+50 °C
Humidity	5...95 % r. h.	< 95 % r. h.	5...95 % r. h.

Standards, directives and approvals (For ball valve)	
Pressure Equipment Directive	2014/68/EU
Pressure accessories Fluid group 2	Range: Article 1, para. 1 Definition: Article 2, para. 5 Without CE marking as per article 4, para. 3 (generally applicable engineering practice) [2]
Environmental compatibility	Environmental Declaration A5W00153677[1] contains data on environmental-compatible product design and assessment (RoHS compliance, compositions, packaging, environmental benefits and disposal).

Standards, directives and approvals (For actuator)	
Product standards Automatic electrical controls for household and similar use	EN 60730-2-14 (Mode of operation, Type 1)
Electromagnetic compatibility (Application)	For residential, commercial and industrial environments
EU Conformity (CE)	GDB..9E A5W00003842 [1]
	GLB..9E A5W00000176 [1]
RCM Conformity	GDB..9E A5W00003843 [1]
	GLB..9E A5W00000177 [1]
EAC Conformity	Eurasian Conformity
Environmental compatibility	Environmental Declaration A5W00153677[1] contains data on environmental-compatible product design and assessment (RoHS compliance, compositions, packaging, environmental benefits and disposal).

[1] See Product documentation

[2] Fittings for a product where PS x DN < 1000, do not require special testing and cannot have CE labeling

Dimensions

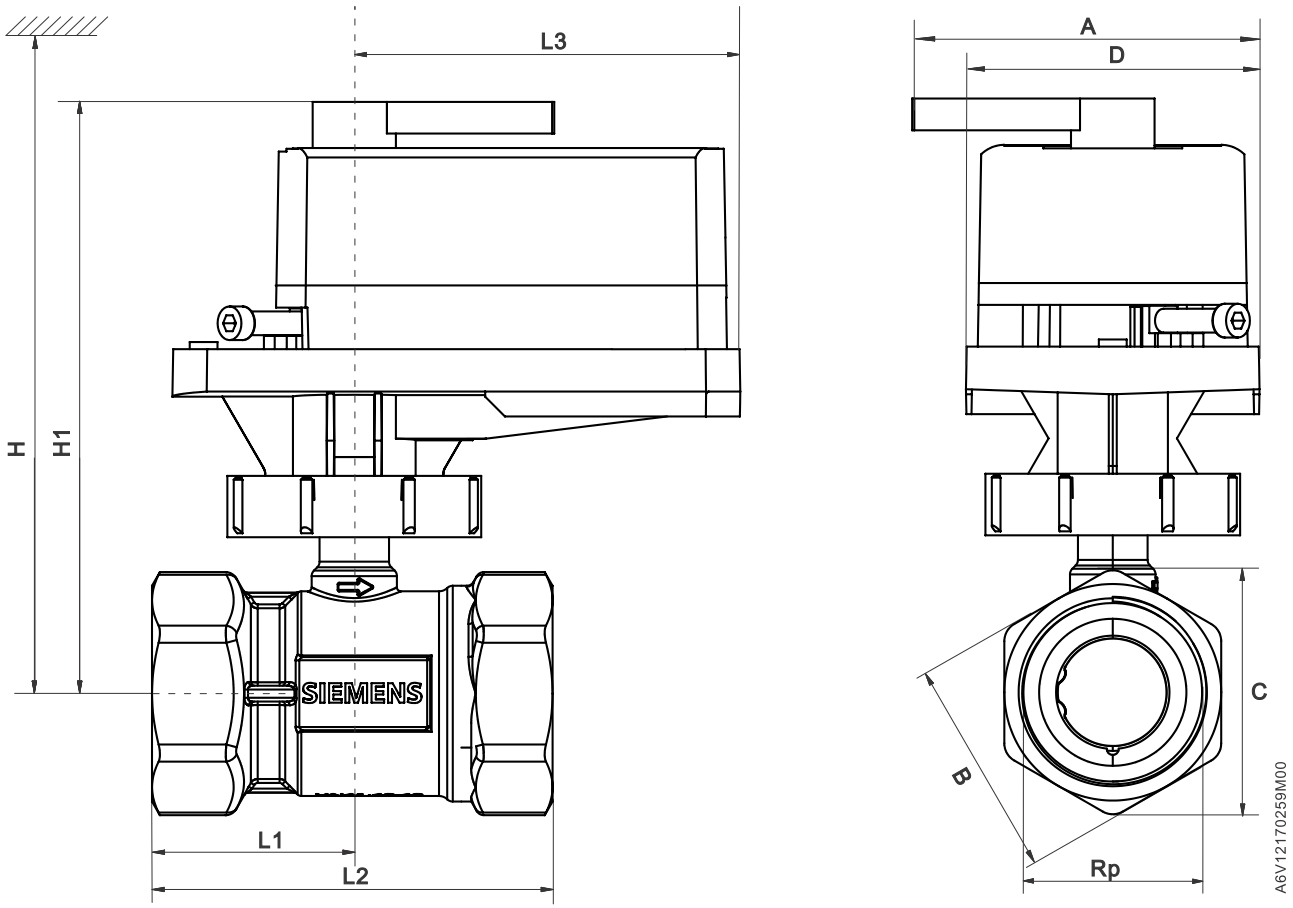

DN = Nominal size

H = Total height of actuator plus minimum mounting distance to wall or ceiling, for mounting, connection, operation, maintenance, etc.

H1 = Dimension from the pipe to the center to install actuator (upper edge)

M..B461..	DN	A	B	C	D	Rp	L1	L2	L3	H1	H	kg
		[mm]	[mm]	[mm]	[mm]	[Inch]	[mm]	[mm]	[mm]	[mm]	[mm]	[kg]
MDB461.15-6.3AI	15	87.5	26	29	73.8	Rp ½	30	59.5	97	138	> 305	0.89
MDB461.20-10AI	20	87.5	31.5	35.1	73.8	Rp ¾	31	62.5	97	142		0.93
MDB461.25-16AI	25	87.5	38.5	43.5	73.8	Rp 1	38.5	77	97	146	> 325	1.05
MLB461.32-25AI	32	87.5	47.5	53.5	73.8	Rp 1¼	46	90	97	151.5		1.25
MLB461.40-40AI	40	87.5	54.5	61.5	73.8	Rp 1½	51	101	97	156		1.56
MLB461.50-63AI	50	87.5	66	74	73.8	Rp 2	59.4	118	97	161	> 340	1.94

Revision numbers

Type	Valid from rev. no.
MDB461.15-6.3AI	..A
MDB461.20-10AI	..A
MDB461.25-16AI	..A
MLB461.32-25AI	..A
MLB461.40-40AI	..A
MLB461.50-63AI	..A

Issued by
Siemens Switzerland Ltd
Smart Infrastructure
Global Headquarters
Theilerstrasse 1a
CH-6300 Zug
Tel. +41 58-724 24 24
www.siemens.com/buildingtechnologies

© Siemens Switzerland Ltd, 2021
Technical specifications and availability subject to change without notice.

Document ID A6V12170259_en--_a
Edition 2021-05-26