SIEMENS

Data sheet 3RW5073-6AB04

Figure similar

SIRIUS soft starter 200-480 V 250 A, 24 V AC/DC Screw terminals Analog output

product brand name	SIRIUS
product category	Hybrid switching devices
product designation	Soft starter
product type designation	3RW50
manufacturer's article number	
● of standard HMI module usable	3RW5980-0HS01
● of high feature HMI module usable	3RW5980-0HF00
● of communication module PROFINET standard usable	3RW5980-0CS00
● of communication module PROFIBUS usable	3RW5980-0CP00
● of communication module Modbus TCP usable	3RW5980-0CT00
● of communication module Modbus RTU usable	3RW5980-0CR00
● of communication module Ethernet/IP	3RW5980-0CE00
● of circuit breaker usable at 400 V	3VA2440-7MN32-0AA0; Type of assignment 1, Iq = 65 kA
● of circuit breaker usable at 500 V	3VA2440-7MN32-0AA0; Type of assignment 1, Iq = 65 kA
● of the gG fuse usable up to 690 V	2x3NA3354-6; Type of coordination 1, Iq = 65 kA
● of full range R fuse link for semiconductor protection usable up to 690 V	3NE1 331-0; Type of coordination 2, Iq = 65 kA
● of back-up R fuse link for semiconductor protection usable up to 690 V	3NE3 335; Type of coordination 2, Iq = 65 kA
● of line contactor usable up to 480 V	3RT1065
● of line contactor usable up to 690 V	3RT1065
General technical data	
starting voltage [%]	30 ... 100 %
stopping voltage [%]	50 %; non-adjustable
start-up ramp time of soft starter	0 ... 20 s
ramp-down time of soft starter	0 ... 20 s
current limiting value [%] adjustable	130 ... 700 %
certificate of suitability	
● CE marking	Yes
● UL approval	Yes
● CSA approval	Yes
product component	
● HMI-High Feature	No
● is supported HMI-Standard	Yes
● is supported HMI-High Feature	Yes
product feature integrated bypass contact system	Yes
number of controlled phases	2
trip class	CLASS 10A / 10E (preset) / 20E; acc. to IEC 60947-4-2
buffering time in the event of power failure	
● for main current circuit	100 ms

Subject to change without notice
© Copyright Siemens

● for control circuit	100 ms
insulation voltage rated value	600 V
degree of pollution	3, acc. to IEC 60947-4-2
impulse voltage rated value	6 kV
blocking voltage of the thyristor maximum	1 600 V
service factor	1
surge voltage resistance rated value	6 kV
maximum permissible voltage for protective separation	
● between main and auxiliary circuit	600 V
shock resistance	15 g / 11 ms, from 12 g / 11 ms with potential contact lifting
vibration resistance	15 mm to 6 Hz; 2g to 500 Hz
utilization category according to IEC 60947-4-2	AC-53a
reference code according to IEC 81346-2	Q
Substance Prohibitance (Date)	09/23/2019
product function	
● ramp-up (soft starting)	Yes
● ramp-down (soft stop)	Yes
● Soft Torque	Yes
● adjustable current limitation	Yes
● pump ramp down	Yes
● intrinsic device protection	Yes
● motor overload protection	Yes; Electronic motor overload protection
● evaluation of thermistor motor protection	No
● auto-RESET	Yes
● manual RESET	Yes
● remote reset	Yes; By turning off the control supply voltage
● communication function	Yes
● operating measured value display	Yes; Only in conjunction with special accessories
● error logbook	Yes; Only in conjunction with special accessories
● via software parameterizable	No
● via software configurable	Yes
● **PROFIenergy**	Yes; in connection with the PROFINET Standard communication module
● voltage ramp	Yes
● torque control	No
● analog output	Yes; 4 ... 20 mA (default) / 0 ... 10 V (parameterizable with High Feature HMI)
Power Electronics	
operational current	
● at 40 °C rated value	250 A
● at 50 °C rated value	220 A
● at 60 °C rated value	200 A
operating voltage	
● rated value	200 ... 480 V
relative negative tolerance of the operating voltage	-15 %
relative positive tolerance of the operating voltage	10 %
operating power for 3-phase motors	
● at 230 V at 40 °C rated value	75 kW
● at 400 V at 40 °C rated value	132 kW
Operating frequency 1 rated value	50 Hz
Operating frequency 2 rated value	60 Hz
relative negative tolerance of the operating frequency	-10 %
relative positive tolerance of the operating frequency	10 %
adjustable motor current	
● at rotary coding switch on switch position 1	100 A
● at rotary coding switch on switch position 2	110 A
● at rotary coding switch on switch position 3	120 A
● at rotary coding switch on switch position 4	130 A
● at rotary coding switch on switch position 5	140 A
● at rotary coding switch on switch position 6	150 A
● at rotary coding switch on switch position 7	160 A
● at rotary coding switch on switch position 8	170 A
● at rotary coding switch on switch position 9	180 A

Subject to change without notice
© Copyright Siemens

● at rotary coding switch on switch position 10	190 A
● at rotary coding switch on switch position 11	200 A
● at rotary coding switch on switch position 12	210 A
● at rotary coding switch on switch position 13	220 A
● at rotary coding switch on switch position 14	230 A
● at rotary coding switch on switch position 15	240 A
● at rotary coding switch on switch position 16	250 A
● minimum	100 A
minimum load [%]	15 %; Relative to smallest settable Ie
power loss [W] for rated value of the current at AC	
● at 40 °C after startup	23 W
● at 50 °C after startup	18 W
● at 60 °C after startup	15 W
power loss [W] at AC at current limitation 350 %	
● at 40 °C during startup	2 454 W
● at 50 °C during startup	2 043 W
● at 60 °C during startup	1 786 W
type of the motor protection	Electronic, tripping in the event of thermal overload of the motor
Control circuit/ Control	
type of voltage of the control supply voltage	AC/DC
control supply voltage at AC	
● at 50 Hz rated value	24 V
● at 60 Hz rated value	24 V
relative negative tolerance of the control supply voltage at AC at 50 Hz	-20 %
relative positive tolerance of the control supply voltage at AC at 50 Hz	20 %
relative negative tolerance of the control supply voltage at AC at 60 Hz	-20 %
relative positive tolerance of the control supply voltage at AC at 60 Hz	20 %
control supply voltage frequency	50 ... 60 Hz
relative negative tolerance of the control supply voltage frequency	-10 %
relative positive tolerance of the control supply voltage frequency	10 %
control supply voltage	
● at DC rated value	24 V
relative negative tolerance of the control supply voltage at DC	-20 %
relative positive tolerance of the control supply voltage at DC	20 %
control supply current in standby mode rated value	160 mA
holding current in bypass operation rated value	490 mA
inrush current by closing the bypass contacts maximum	7.6 A
inrush current peak at application of control supply voltage maximum	3.3 A
duration of inrush current peak at application of control supply voltage	12.1 ms
design of the overvoltage protection	Varistor
design of short-circuit protection for control circuit	4 A gG fuse (Icu=1 kA), 6 A quick-acting fuse (Icu=1 kA), C1 miniature circuit breaker (Icu= 600 A), C6 miniature circuit breaker (Icu= 300 A); Is not part of scope of supply
Inputs/ Outputs	
number of digital inputs	1
number of digital outputs	3
● not parameterizable	2
digital output version	2 normally-open contacts (NO) / 1 changeover contact (CO)
number of analog outputs	1
switching capacity current of the relay outputs	
● at AC-15 at 250 V rated value	3 A
● at DC-13 at 24 V rated value	1 A
Installation/ mounting/ dimensions	
mounting position	with vertical mounting surface +/-90° rotatable, with vertical mounting surface

Subject to change without notice
© Copyright Siemens

	+/- 22.5° tiltable to the front and back
fastening method	screw fixing
height	230 mm
width	160 mm
depth	282 mm
required spacing with side-by-side mounting	
● forwards	10 mm
● backwards	0 mm
● upwards	100 mm
● downwards	75 mm
● at the side	5 mm
weight without packaging	7.3 kg
Connections/ Terminals	
type of electrical connection	
● for main current circuit	busbar connection
● for control circuit	screw-type terminals
width of connection bar maximum	35 mm; with connection cover 3RT1966-4EA1 maximum length 45 mm
type of connectable conductor cross-sections	
● for main contacts for box terminal using the front clamping point solid	95 ... 300 mm²
● for main contacts for box terminal using the front clamping point finely stranded with core end processing	70 ... 240 mm²
● for main contacts for box terminal using the front clamping point finely stranded without core end processing	70 ... 240 mm²
● for main contacts for box terminal using the front clamping point stranded	95 ... 300 mm²
● for main contacts for box terminal using the back clamping point solid	120 ... 240 mm²
● for AWG cables for main contacts for box terminal using the back clamping point	250 ... 500 kcmil
● for main contacts for box terminal using both clamping points solid	min. 2x 70 mm², max. 2x 240 mm²
● for main contacts for box terminal using both clamping points finely stranded with core end processing	min. 2x 50 mm², max. 2x 185 mm²
● for main contacts for box terminal using both clamping points finely stranded without core end processing	min. 2x 50 mm², max. 2x 185 mm²
● for main contacts for box terminal using both clamping points stranded	min. 2x 70 mm², max. 2x 240 mm²
● for main contacts for box terminal using the back clamping point finely stranded with core end processing	120 ... 185 mm²
● for main contacts for box terminal using the back clamping point finely stranded without core end processing	120 ... 185 mm²
● for main contacts for box terminal using the back clamping point stranded	120 ... 240 mm²
type of connectable conductor cross-sections	
● for AWG cables for main current circuit solid	2/0 ... 500 kcmil
● for DIN cable lug for main contacts stranded	50 ... 240 mm²
● for DIN cable lug for main contacts finely stranded	70 ... 240 mm²
type of connectable conductor cross-sections	
● for control circuit solid	1x (0.5 ... 4.0 mm²), 2x (0.5 ... 2.5 mm²)
● for control circuit finely stranded with core end processing	1x (0.5 ... 2.5 mm²), 2x (0.5 ... 1.5 mm²)
● for AWG cables for control circuit solid	1x (20 ... 12), 2x (20 ... 14)
wire length	
● between soft starter and motor maximum	800 m
● at the digital inputs at AC maximum	1 000 m
tightening torque	
● for main contacts with screw-type terminals	14 ... 24 N·m
● for auxiliary and control contacts with screw-type terminals	0.8 ... 1.2 N·m
tightening torque [lbf·in]	
● for main contacts with screw-type terminals	124 ... 210 lbf·in
● for auxiliary and control contacts with screw-type terminals	7 ... 10.3 lbf·in
Ambient conditions	
installation altitude at height above sea level maximum	5 000 m; derating as of 1000 m, see Manual

Subject to change without notice
© Copyright Siemens

ambient temperature	
● during operation	-25 ... +60 °C; Please observe derating at temperatures of 40 °C or above
● during storage and transport	-40 ... +80 °C
environmental category	
● during operation according to IEC 60721	3K6 (no ice formation, only occasional condensation), 3C3 (no salt mist), 3S2 (sand must not get into the devices), 3M6
● during storage according to IEC 60721	1K6 (only occasional condensation), 1C2 (no salt mist), 1S2 (sand must not get inside the devices), 1M4
● during transport according to IEC 60721	2K2, 2C1, 2S1, 2M2 (max. fall height 0.3 m)
EMC emitted interference	acc. to IEC 60947-4-2: Class A
Communication/ Protocol	
communication module is supported	
● PROFINET standard	Yes
● EtherNet/IP	Yes
● Modbus RTU	Yes
● Modbus TCP	Yes
● PROFIBUS	Yes
UL/CSA ratings	
manufacturer's article number	
● **of circuit breaker**	
— usable for High Faults at 460/480 V according to UL	Siemens type: 3VA54, max. 600 A; Iq max = 65 kA
● **of the fuse**	
— usable for Standard Faults up to 575/600 V according to UL	Type: Class L, max. 800 A; Iq = 18 kA
— usable for High Faults up to 575/600 V according to UL	Type: Class L, max. 800 A; Iq = 100 kA
operating power [hp] for 3-phase motors	
● at 200/208 V at 50 °C rated value	60 hp
● at 220/230 V at 50 °C rated value	75 hp
● at 460/480 V at 50 °C rated value	150 hp
Safety related data	
protection class IP on the front according to IEC 60529	IP00; IP20 with cover
touch protection on the front according to IEC 60529	finger-safe, for vertical contact from the front with cover
ATEX	
certificate of suitability	
● ATEX	Yes
● IECEx	Yes
● UKEX	Yes
hardware fault tolerance according to IEC 61508 relating to ATEX	0
PFDavg with low demand rate according to IEC 61508 relating to ATEX	0.09
PFHD with high demand rate according to EN 62061 relating to ATEX	9E-6 1/h
Safety Integrity Level (SIL) according to IEC 61508 relating to ATEX	SIL1
T1 value for proof test interval or service life according to IEC 61508 relating to ATEX	3 a
Certificates/ approvals	
General Product Approval	

CSA CCC Confirmation UKCA CE EG-Konf. UL

General Product Approval	For use in hazardous locations			Test Certificates	Marine / Shipping
EAC	ATEX	IECEx	other ex-certificates	Type Test Certificates/Test Report	ABS

Subject to change without notice
© Copyright Siemens

Marine / Shipping	other
LRS, PRS	Confirmation

Further information

Information on the packaging
https://support.industry.siemens.com/cs/ww/en/view/109813875
Information- and Downloadcenter (Catalogs, Brochures,…)
https://www.siemens.com/ic10
Industry Mall (Online ordering system)
https://mall.industry.siemens.com/mall/en/en/Catalog/product?mlfb=3RW5073-6AB04
Cax online generator
http://support.automation.siemens.com/WW/CAXorder/default.aspx?lang=en&mlfb=3RW5073-6AB04
Service&Support (Manuals, Certificates, Characteristics, FAQs,...)
https://support.industry.siemens.com/cs/ww/en/ps/3RW5073-6AB04
Image database (product images, 2D dimension drawings, 3D models, device circuit diagrams, EPLAN macros, ...)
http://www.automation.siemens.com/bilddb/cax_de.aspx?mlfb=3RW5073-6AB04&lang=en
Characteristic: Tripping characteristics, I²t, Let-through current
https://support.industry.siemens.com/cs/ww/en/ps/3RW5073-6AB04/char
Characteristic: Installation altitude
http://www.automation.siemens.com/bilddb/index.aspx?view=Search&mlfb=3RW5073-6AB04&objecttype=14&gridview=view1
Simulation Tool for Soft Starters (STS)
https://support.industry.siemens.com/cs/ww/en/view/101494917

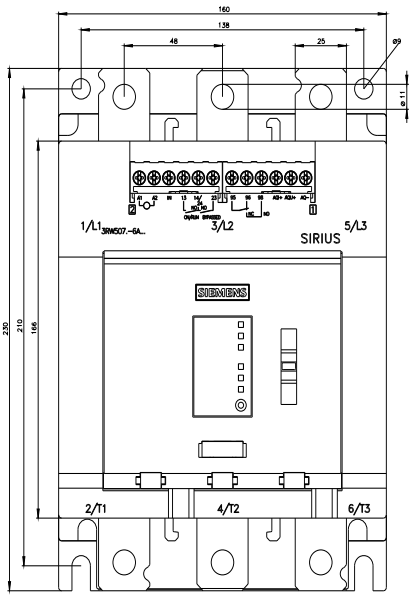

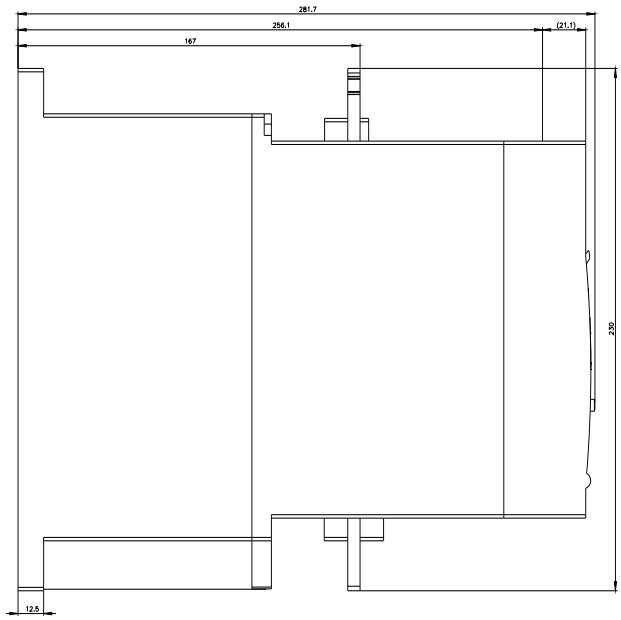

Subject to change without notice
© Copyright Siemens

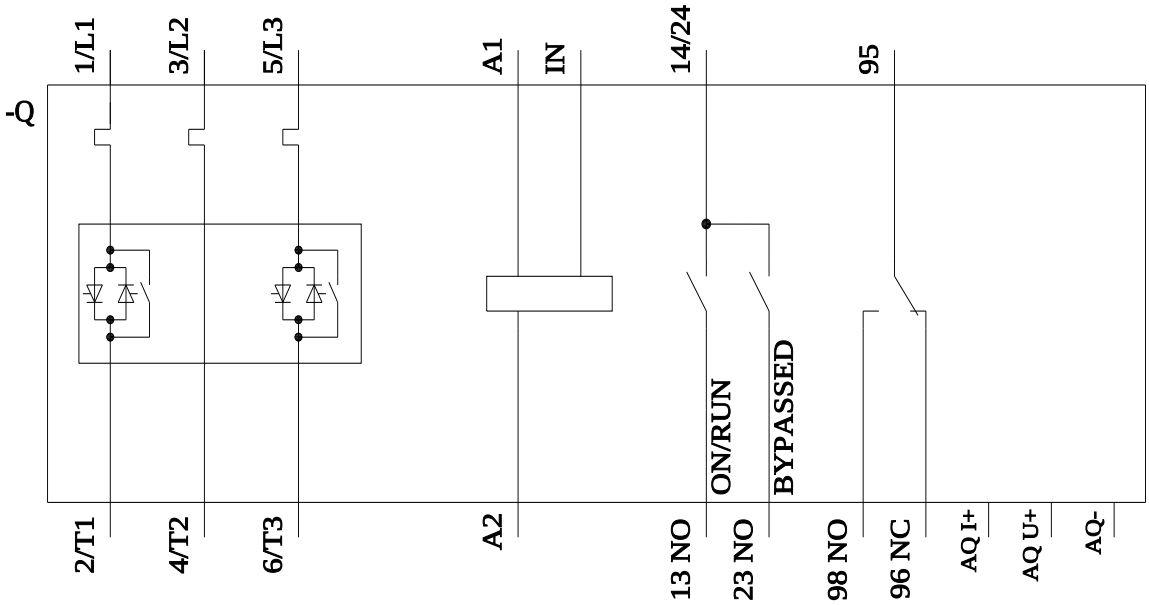

last modified: 8/24/2023

Subject to change without notice
© Copyright Siemens

Subject to change without notice
© Copyright Siemens