Part Number: 0387536704
Status: Active
Description: Wrap-Around Cover Kit For 9.53mm Pitch Tri-Barrier Terminal Strips, 4 Circuits

Documents:
Drawing (PDF) RoHS Certificate of Compliance (PDF)

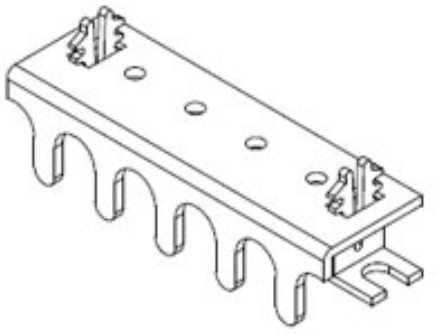

Series image - Reference only

General	
Product Family	Accessories
Series	38753
Component Type	Cover Kit
Product Name	N/A
Taxonomy	Connector Accessories
UPC	800756342139
Physical	
Circuits (Loaded)	4
Circuits (maximum)	4
Color - Resin	Black
Lock to Mating Part	Yes
Material - Resin	Polyester Alloy
Packaging Type	Bag
Temperature Range - Operating	-40° to +105°C
Solder Process Data	
Lead-freeProcess Capability	WAVE
Material Info	
Engineering Number	CW0504
Reference - Drawing Numbers	
Sales Drawing	SD-38753-001-001, SD-38753-001-002

EU ELV
Not Relevant

EU RoHS **China RoHS**
Not Reviewed
REACH SVHC
Not Reviewed
Halogen-Free Status
Not Reviewed
For more information, please visit Contact US

China ROHS	Not Reviewed
ELV	Not Relevant
RoHS Phthalates	Not Reviewed

Search Parts in this Series
38753 Series