This document was generated on 08/25/2022

PLEASE CHECK WWW.MOLEX.COM FOR LATEST PART INFORMATION

Part Number: 0387536706
Status: Active
Description: Wrap-Around Cover Kit For 9.53mm Pitch Tri-Barrier Terminal Strips, 6 Circuits

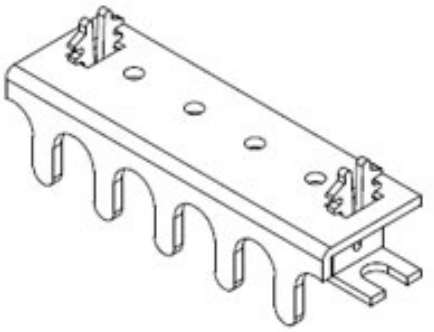

Series image - Reference only

Documents:
Drawing (PDF) RoHS Certificate of Compliance (PDF)

General	
Product Family	Accessories
Series	38753
Component Type	Cover Kit
Product Name	N/A
Taxonomy	Connector Accessories
UPC	800756342153
Physical	
Circuits (Loaded)	6
Circuits (maximum)	6
Color - Resin	Black
Lock to Mating Part	Yes
Material - Resin	Polyester Alloy
Net Weight	4.643/g
Packaging Type	Bag
Temperature Range - Operating	-40° to +105°C
Material Info	
Engineering Number	CW0506
Reference - Drawing Numbers	
Sales Drawing	SD-38753-001-001, SD-38753-001-002

EU ELV
Not Relevant

EU RoHS **China RoHS**
Compliant

REACH SVHC
Not Contained Per - D(2020)4578-DC (25 June 2020)

Halogen-Free Status
Not Low-Halogen

For more information, please visit Contact US

China ROHS	Not Relevant
ELV	Not Relevant
RoHS Phthalates	Not Contained

Search Parts in this Series
38753 Series

This document was generated on 08/25/2022

PLEASE CHECK WWW.MOLEX.COM FOR LATEST PART INFORMATION