CIRCUIT	A	B	C	D	E	F	ORDER NO.	STATUS
33	9.0	9.6	12.62	9.6	10.6	11.1	1041963327	AVAILABLE
41	11.4	12.0	15.02	12.0	13.0	13.5	1041964127	ON-GOING
45	12.6	13.2	16.22	13.2	14.2	14.7	1041964527	AVAILABLE
51	14.4	15.0	18.02	15.0	16.0	16.5	1041965127	ON-GOING
61	17.4	18.0	21.02	18.0	19.0	19.5	1041966127	AVAILABLE
65	18.6	19.2	22.22	19.2	20.2	20.7	1041966527	ON-GOING
71	20.4	21.0	24.02	21.0	22.0	22.5	1041967127	ON-GOING

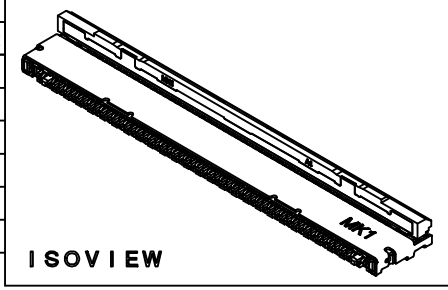

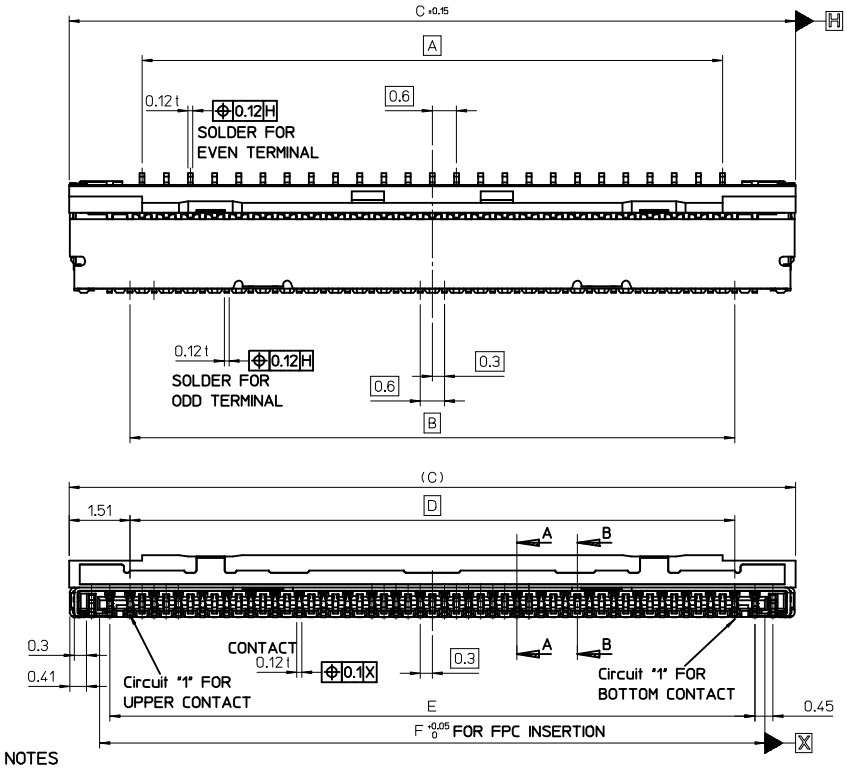

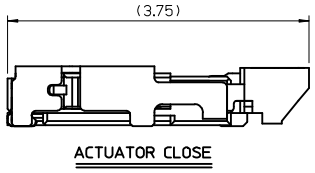

ACTUATOR CLOSE

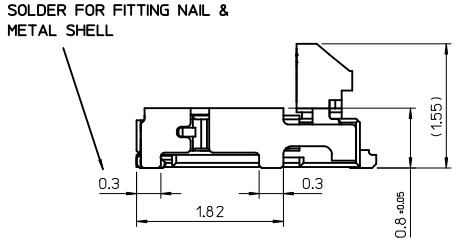

ACTUATOR OPEN
DELIVERY POSITION

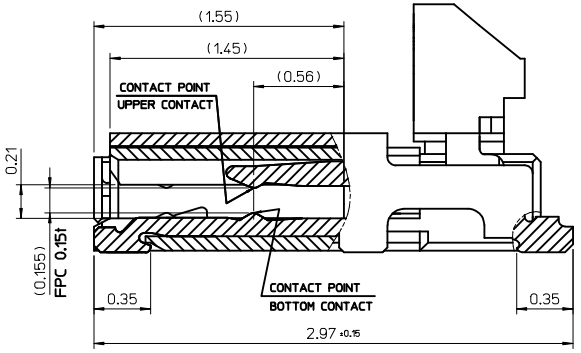

ODD TERMINAL
SECTION A-A

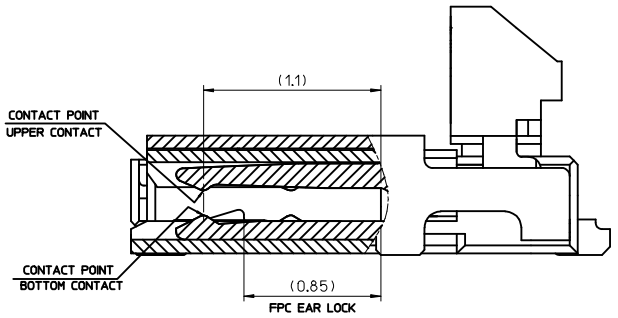

EVEN TERMINAL
SECTION B-B

NOTES
1. MATERIAL
   - HOUSING : LCP, GLASS FILLED, UL94V-0
     COLOR : NATURAL
   - OVERMOLD ACTUATOR : PPS, GLASS FILLED, UL94V-0, COLOR : BLACK
   - TERMINAL(EVEN / ODD) : COPPER ALLOY, (THICKNESS : 0.12t)
   - FITTING NAIL(M&F) : COPPER ALLOY, (THICKNESS : 0.12t)
   - METAL SHELL : STAINLESS STEEL(SUS), (THICKNESS : 0.08t)
   - OVERMOLD METAL SHELL : STAINLESS STEEL(SUS), (THICKNESS : 0.1t)
2. FINISHES
   TERMINAL : SELECTIVE GOLD[Au] OVER NICKEL[Ni] PLATING.
   CONTACT AREA : GOLD[Au] 0.1 MICROMETER MIN. OVER
   NICKEL[Ni] 1.0 MICROMETER MIN.(UNDER PLATING)
   SOLDER AREA : GOLD[Au] 0.05 MICROMETER MIN. OVER
   NICKEL[Ni] 1.0 MICROMETER MIN.(UNDER PLATING)
   - FITTING NAIL-M : GOLD[Au] 0.1 MICROMETER MIN. OVER
   NICKEL[Ni] 1.0 MICROMETER MIN.(UNDER PLATING)
   - FITTING NAIL-F : TIN[Sn] OVER NICKEL[Ni] PLATING.
   Tin[Sn] 1~4 MICROMETER, NICKEL[Ni] 1~3 MICROMETER
   - METAL SHELL : OVERALL NICKEL PLATING 1.0 MICROMETER MINIMUM.
   - OVERMOLD METAL SHELL : OVERALL NICKEL PLATING 1.0 MICROMETER MINIMUM.
3. SOLDER TAILS, METAL SHELL AND FITTING NAILS
   COPLANARITY IS TO BE 0.08 MAXIMUM.

NEW RELEASE
EC NO: KOR2016-0027 2015/09/23
DRWN:KYHWANG 2015/12/01
CHKD:KSKIM 2015/12/07
APPR:YSKIM02
DESCRIPTION
A
REV

QUALITY SYMBOLS
▼=0
Ⓒ=0

GENERAL TOLERANCES (UNLESS SPECIFIED)

	mm	INCH
4 PLACES	± ---	± ---
3 PLACES	± ---	± ---
2 PLACES	± 0.05	± ---
1 PLACE	± 0.1	± ---
ANGULAR ± 1 °		

DRAFT WHERE APPLICABLE MUST REMAIN WITHIN DIMENSIONS

DIMENSION STYLE: MM ONLY
SCALE: 1:1
DESIGN UNITS: METRIC
THIRD ANGLE PROJECTION

DRAWN BY: KYHWANG DATE: 2015/09/23
CHECKED BY: KSKIM DATE: 2015/12/01
APPROVED BY: YSKIM02 DATE: 2015/12/07
MATERIAL NO.: SEE TABLE

TITLE: 0.3MM PITCH FPC CONN. BACKFLIP H=0.8 SHIELD, DUAL CONTACT

molex

DOCUMENT NO.: SD-104196-002
SHEET NO.: 1 OF 3
SIZE: A3

THIS DRAWING CONTAINS INFORMATION THAT IS PROPRIETARY TO MOLEX INCORPORATED AND SHOULD NOT BE USED WITHOUT WRITTEN PERMISSION

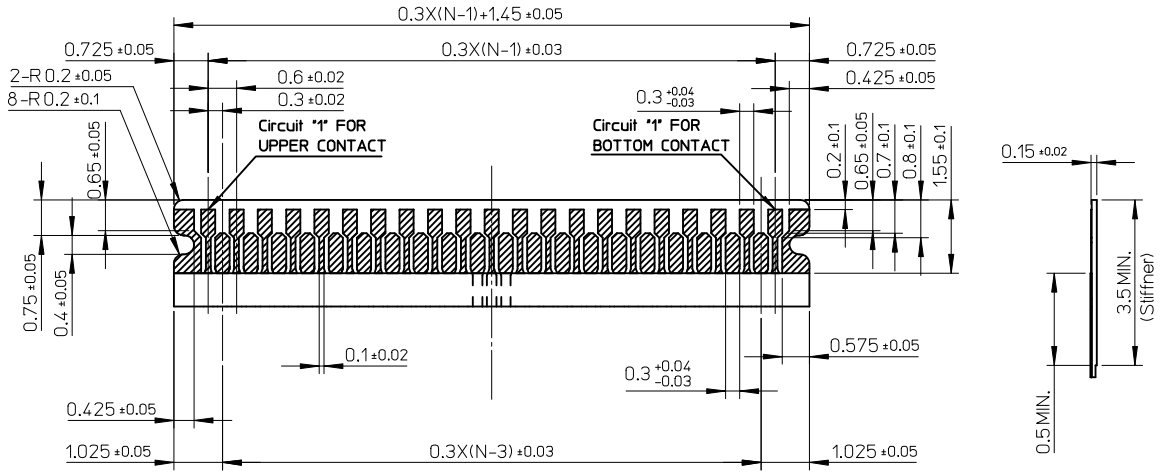

RECOMMENDED FPC SPECIFICATION

THICKNESS : 0.15 ± 0.02

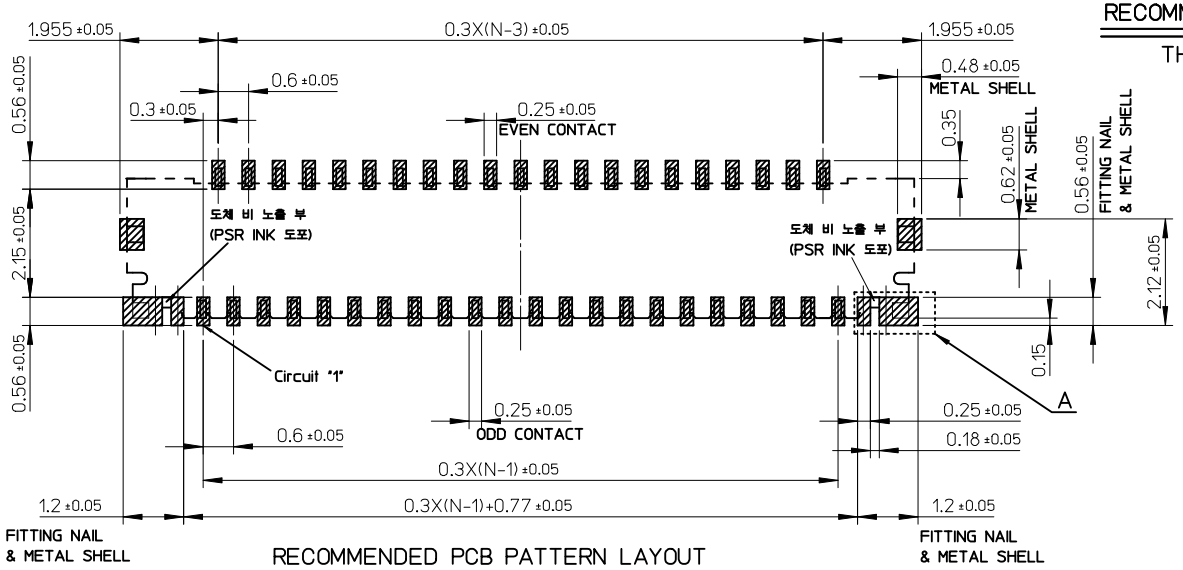

RECOMMENDED PCB PATTERN LAYOUT

(COMPONENT SIDE)

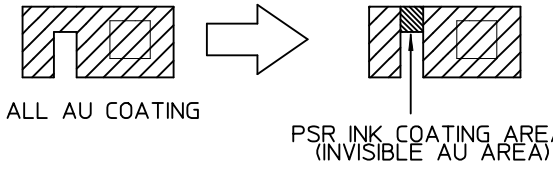

DETAIL "A"

PCB COATING PROCESS

NEW RELEASE	A	2015/09/23	KOR2016-0027
DESCRIPTION	REV	2015/12/01	DRWN:KYHWANG
		2015/12/07	CH'KD:KSKIM
			APPR:YSKIM02

QUALITY SYMBOLS
▼=0
Ⓒ=0

GENERAL TOLERANCES (UNLESS SPECIFIED)

	mm	INCH
4 PLACES	± ---	± ---
3 PLACES	± ---	± ---
2 PLACES	± 0.05	± ---
1 PLACE	± 0.1	± ---
ANGULAR ± 1 °		

DRAFT WHERE APPLICABLE MUST REMAIN WITHIN DIMENSIONS

DIMENSION STYLE	MM ONLY
SCALE	1:1
DESIGN UNITS	METRIC
	THIRD ANGLE PROJECTION
DRAWN BY	KYHWANG
DATE	2015/09/23
CHECKED BY	KSKIM
DATE	2015/12/01
APPROVED BY	YSKIM02
DATE	2015/12/07
MATERIAL NO.	SEE SHEET1
DOCUMENT NO.	SD-104196-002
SHEET NO.	2 OF 3
SIZE	A3

TITLE: 0.3MM PITCH FPC CONN. BACKFLIP H=0.8 SHIELD, DUAL CONTACT

molex

THIS DRAWING CONTAINS INFORMATION THAT IS PROPRIETARY TO MOLEX INCORPORATED AND SHOULD NOT BE USED WITHOUT WRITTEN PERMISSION

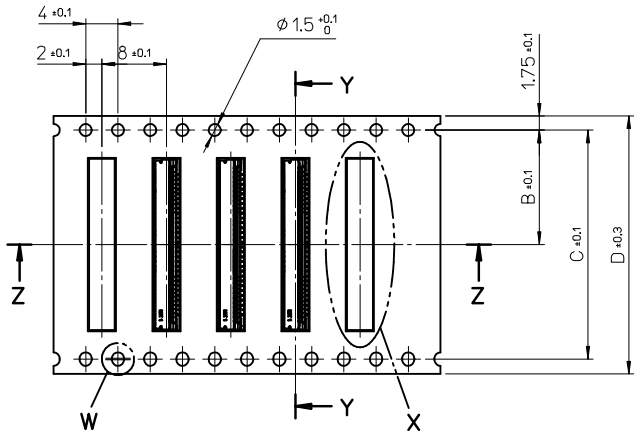

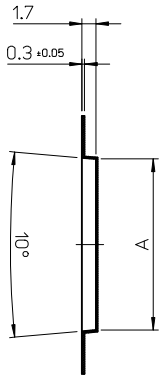

SECTION Y-Y

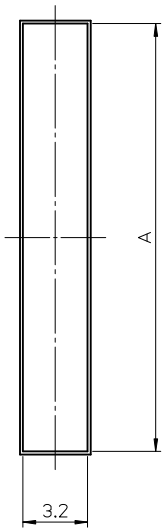

DETAIL X

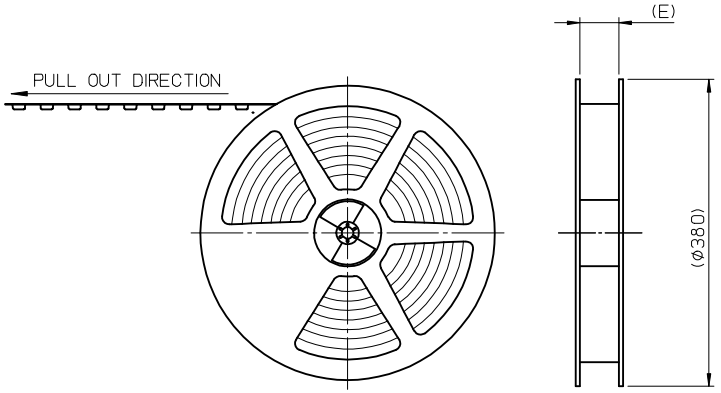

PLASTIC BOBBIN

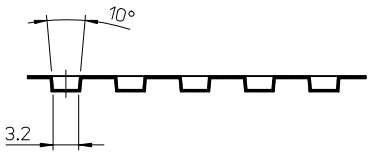

SECTION Z-Z

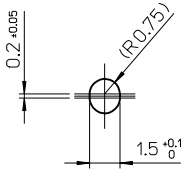

DETAIL W

NOTES

1. QUANTITY OF CONNECTORS : 5000PCS/REEL
2. LEAD LENGTH

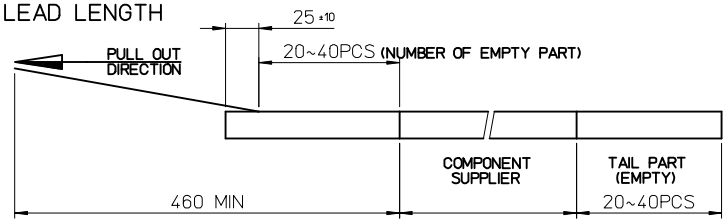

3. PEELING OFF FORCE OF COVER TAPE : 0.1N~0.59N(10.2GF~60GF)
   (PEELING DIRECTION AS SHOW IN FOLLOW FIG.)
   PEELING OFF SPEED : 300mm/Min.(Ref.)



4. FLASH IN ANY PORTION SHOULD BE LESS THAN 0.20mm MAX.

CIRCUIT	A	B	C	D	E	ORDER NO.
71	24.22	20.2	40.4	44	45.5	1041967127
65	22.42	20.2	40.4	44	45.5	1041966527
61	21.22	14.2	28.4	32	33.5	1041966127
51	18.22	14.2	28.4	32	33.5	1041965127
45	16.42	14.2	28.4	32	33.5	1041964527
41	15.22	14.2	28.4	32	33.5	1041964127
33	12.82	11.5		24	25.5	1041963327

NEW RELEASE
EC NO: KOR2016-0027 2015/09/23
DRWN:KYHWANG 2015/12/01
CH'KD:KSKIM 2015/12/07
APPR:YSKIM02
DESCRIPTION
A
REV

QUALITY SYMBOLS
▼=0
▽=0

GENERAL TOLERANCES (UNLESS SPECIFIED)

	mm	INCH
4 PLACES	± ---	± ---
3 PLACES	± ---	± ---
2 PLACES	± 0.05	± ---
1 PLACE	± 0.1	± ---
ANGULAR ± 1 °		

DRAFT WHERE APPLICABLE MUST REMAIN WITHIN DIMENSIONS

DIMENSION STYLE: MM ONLY
SCALE: 1:1
DESIGN UNITS: METRIC
THIRD ANGLE PROJECTION

DRAWN BY: KYHWANG DATE: 2015/09/23
CHECKED BY: KSKIM DATE: 2015/12/01
APPROVED BY: YSKIM02 DATE: 2015/12/07
MATERIAL NO.: SHH TABLE

TITLE: 0.3MM PITCH FPC CONN. BACKFLIP H=0.8 SHIELD, DUAL CONTACT

molex

DOCUMENT NO.: SD-104196-002
SHEET NO.: 3 OF 3
SIZE: A3

THIS DRAWING CONTAINS INFORMATION THAT IS PROPRIETARY TO MOLEX INCORPORATED AND SHOULD NOT BE USED WITHOUT WRITTEN PERMISSION

CIRCUIT	A	B	C	D	E	F	ORDER NO.	STATUS
33	9.0	9.6	12.62	9.6	10.6	11.1	1041963327	AVAILABLE
41	11.4	12.0	15.02	12.0	13.0	13.5	1041964127	ON-GOING
45	12.6	13.2	16.22	13.2	14.2	14.7	1041964527	AVAILABLE
51	14.4	15.0	18.02	15.0	16.0	16.5	1041965127	ON-GOING
61	17.4	18.0	21.02	18.0	19.0	19.5	1041966127	AVAILABLE
65	18.6	19.2	22.22	19.2	20.2	20.7	1041966527	ON-GOING
71	20.4	21.0	24.02	21.0	22.0	22.5	1041967127	ON-GOING

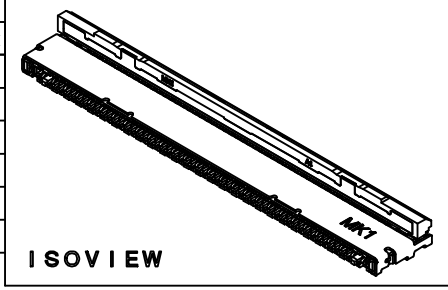

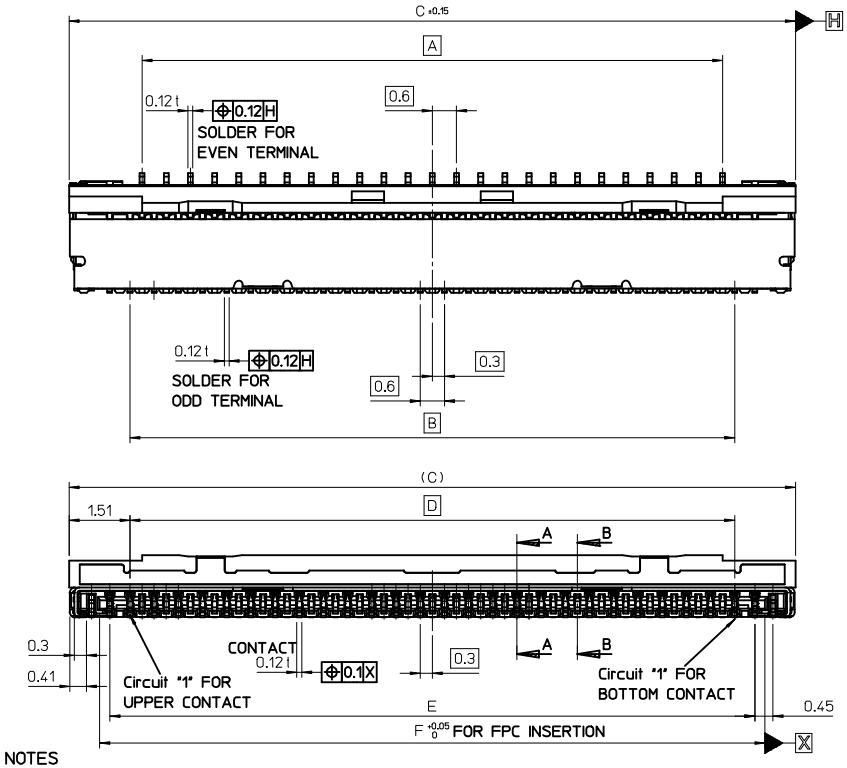

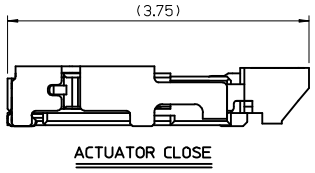

ACTUATOR CLOSE

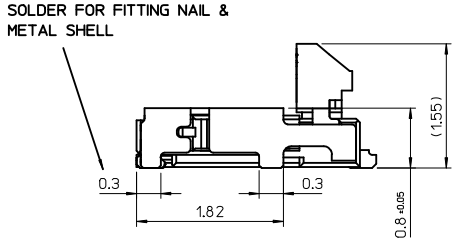

ACTUATOR OPEN
DELIVERY POSITION

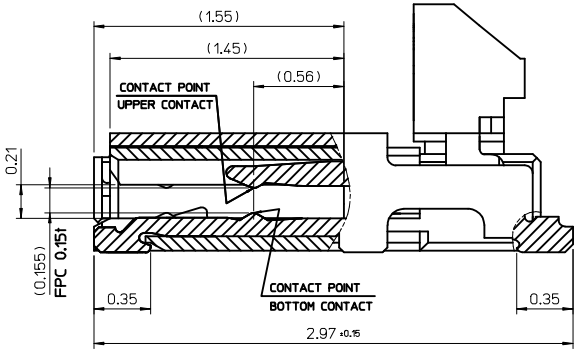

ODD TERMINAL
SECTION A-A

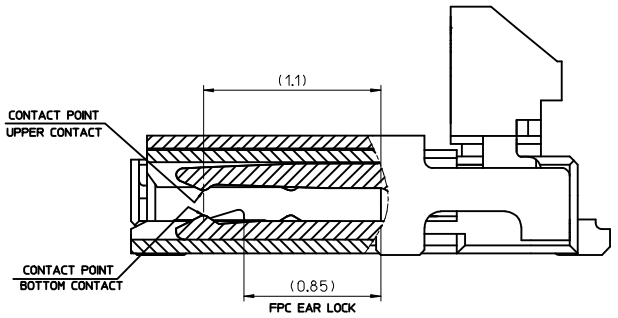

EVEN TERMINAL
SECTION B-B

NOTES
1. MATERIAL
   - HOUSING : LCP, GLASS FILLED, UL94V-0
     COLOR : NATURAL
   - OVERMOLD ACTUATOR : PPS, GLASS FILLED, UL94V-0, COLOR : BLACK
   - TERMINAL(EVEN / ODD) : COPPER ALLOY, (THICKNESS : 0.12t)
   - FITTING NAIL(M&F) : COPPER ALLOY, (THICKNESS : 0.12t)
   - METAL SHELL : STAINLESS STEEL(SUS), (THICKNESS : 0.08t)
   - OVERMOLD METAL SHELL : STAINLESS STEEL(SUS), (THICKNESS : 0.1t)
2. FINISHES
   TERMINAL : SELECTIVE GOLD[Au] OVER NICKEL[Ni] PLATING.
   CONTACT AREA : GOLD[Au] 0.1 MICROMETER MIN. OVER
   NICKEL[Ni] 1.0 MICROMETER MIN.(UNDER PLATING)
   SOLDER AREA : GOLD[Au] 0.05 MICROMETER MIN. OVER
   NICKEL[Ni] 1.0 MICROMETER MIN.(UNDER PLATING)
   - FITTING NAIL-M : GOLD[Au] 0.1 MICROMETER MIN. OVER
   NICKEL[Ni] 1.0 MICROMETER MIN.(UNDER PLATING)
   - FITTING NAIL-F : TIN[Sn] OVER NICKEL[Ni] PLATING.
   Tin[Sn] 1~4 MICROMETER, NICKEL[Ni] 1~3 MICROMETER
   - METAL SHELL : OVERALL NICKEL PLATING 1.0 MICROMETER MINIMUM.
   - OVERMOLD METAL SHELL : OVERALL NICKEL PLATING 1.0 MICROMETER MINIMUM.
3. SOLDER TAILS, METAL SHELL AND FITTING NAILS
   COPLANARITY IS TO BE 0.08 MAXIMUM.

NEW RELEASE
EC NO: KOR2016-0027 2015/09/23
DRWN:KYHWANG 2015/12/01
CHKD:KSKIM 2015/12/07
APPR:YSKIM02
DESCRIPTION
A
REV

QUALITY SYMBOLS
▼=0
Ⓒ=0

GENERAL TOLERANCES (UNLESS SPECIFIED)

	mm	INCH
4 PLACES	± ---	± ---
3 PLACES	± ---	± ---
2 PLACES	± 0.05	± ---
1 PLACE	± 0.1	± ---
ANGULAR ± 1 °		

DRAFT WHERE APPLICABLE MUST REMAIN WITHIN DIMENSIONS

DIMENSION STYLE: MM ONLY
SCALE: 1:1
DESIGN UNITS: METRIC
THIRD ANGLE PROJECTION

DRAWN BY: KYHWANG DATE: 2015/09/23
CHECKED BY: KSKIM DATE: 2015/12/01
APPROVED BY: YSKIM02 DATE: 2015/12/07
MATERIAL NO.: SEE TABLE

TITLE: 0.3MM PITCH FPC CONN. BACKFLIP H=0.8 SHIELD, DUAL CONTACT

molex

DOCUMENT NO.: SD-104196-002
SHEET NO.: 1 OF 3
SIZE: A3

THIS DRAWING CONTAINS INFORMATION THAT IS PROPRIETARY TO MOLEX INCORPORATED AND SHOULD NOT BE USED WITHOUT WRITTEN PERMISSION

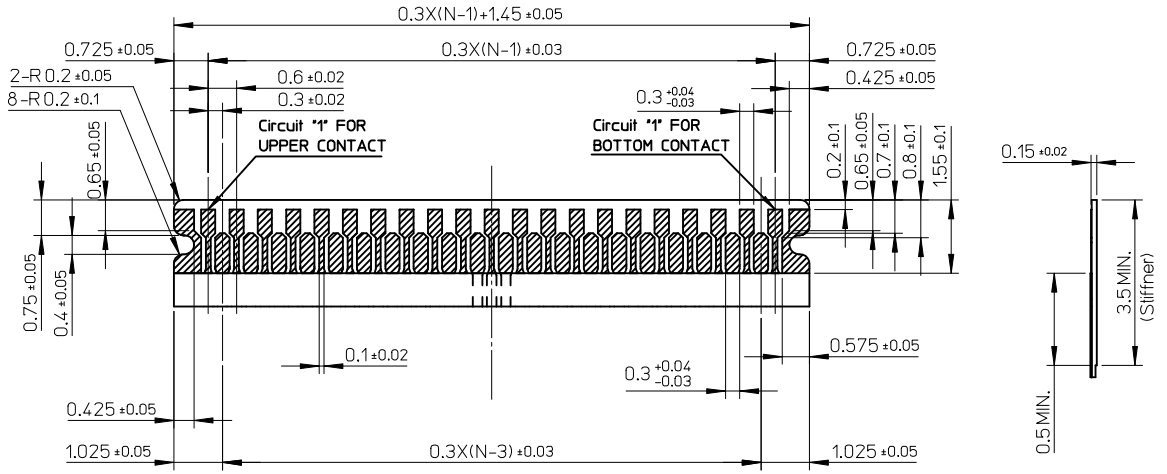

RECOMMENDED FPC SPECIFICATION

THICKNESS : 0.15 ± 0.02

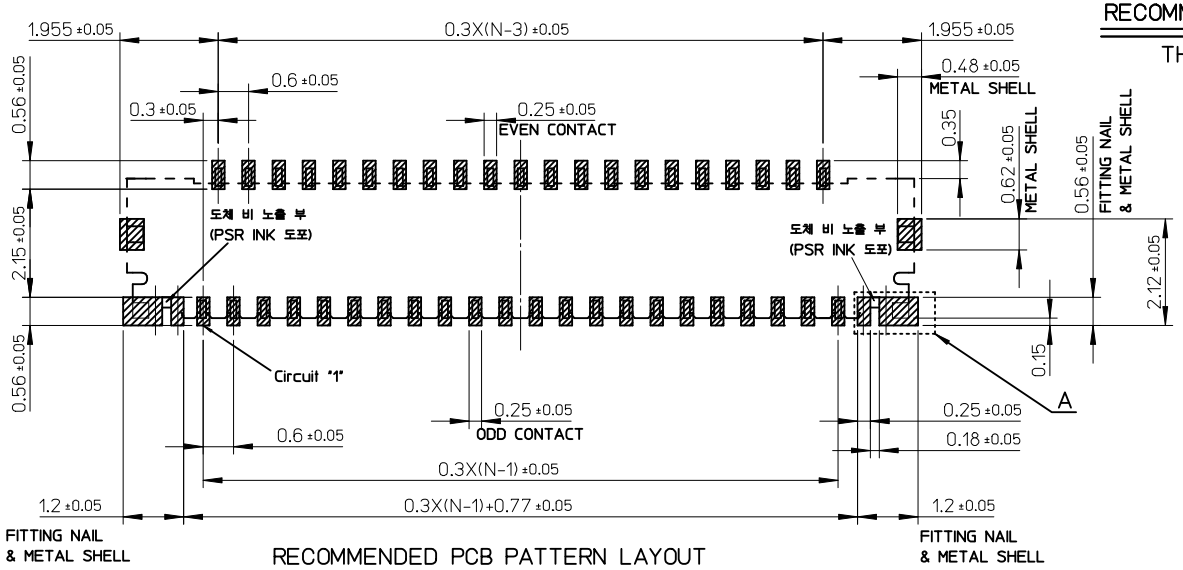

RECOMMENDED PCB PATTERN LAYOUT

(COMPONENT SIDE)

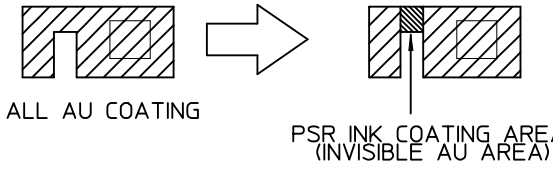

DETAIL "A"

PCB COATING PROCESS

NEW RELEASE	A	2015/09/23	KOR2016-0027
DESCRIPTION	REV	2015/12/01	DRWN:KYHWANG
		2015/12/07	CH'KD:KSKIM
			APPR:YSKIM02

QUALITY SYMBOLS
▼=0
Ⓒ=0

GENERAL TOLERANCES (UNLESS SPECIFIED)

	mm	INCH
4 PLACES	± ---	± ---
3 PLACES	± ---	± ---
2 PLACES	± 0.05	± ---
1 PLACE	± 0.1	± ---
ANGULAR ± 1 °		

DRAFT WHERE APPLICABLE MUST REMAIN WITHIN DIMENSIONS

DIMENSION STYLE	MM ONLY
SCALE	1:1
DESIGN UNITS	METRIC
	THIRD ANGLE PROJECTION
DRAWN BY	KYHWANG
DATE	2015/09/23
CHECKED BY	KSKIM
DATE	2015/12/01
APPROVED BY	YSKIM02
DATE	2015/12/07
MATERIAL NO.	SEE SHEET1
DOCUMENT NO.	SD-104196-002
SHEET NO.	2 OF 3
SIZE	A3

TITLE: 0.3MM PITCH FPC CONN. BACKFLIP H=0.8 SHIELD, DUAL CONTACT

molex

THIS DRAWING CONTAINS INFORMATION THAT IS PROPRIETARY TO MOLEX INCORPORATED AND SHOULD NOT BE USED WITHOUT WRITTEN PERMISSION

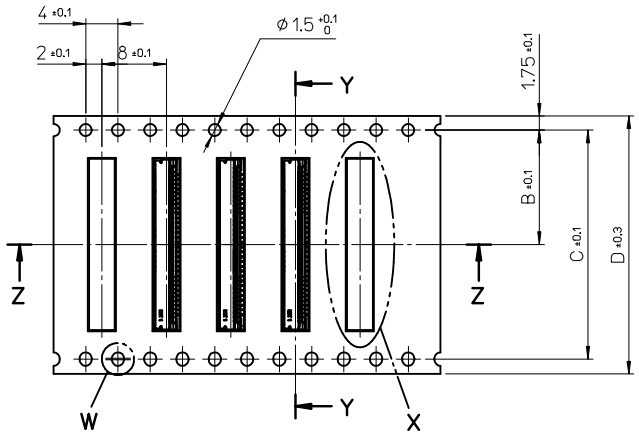

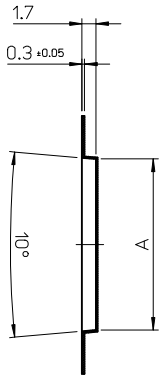

SECTION Y-Y

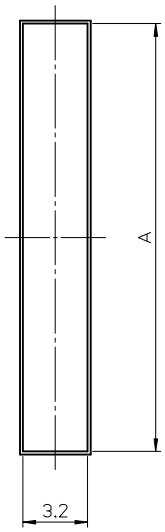

DETAIL X

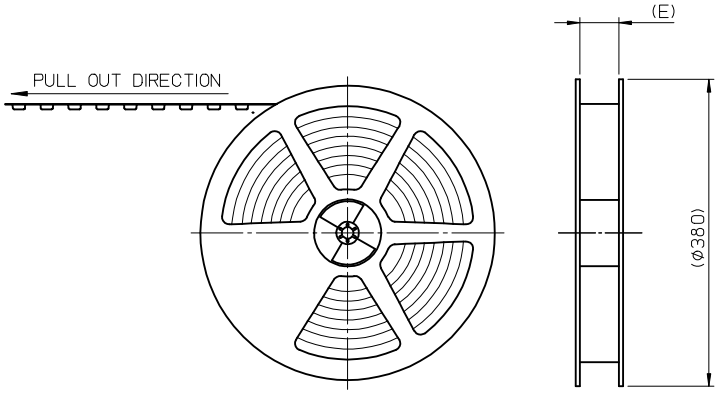

PLASTIC BOBBIN

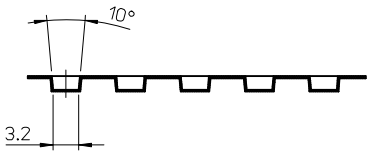

SECTION Z-Z

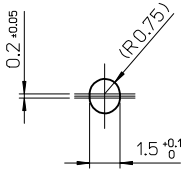

DETAIL W

NOTES

1. QUANTITY OF CONNECTORS : 5000PCS/REEL
2. LEAD LENGTH

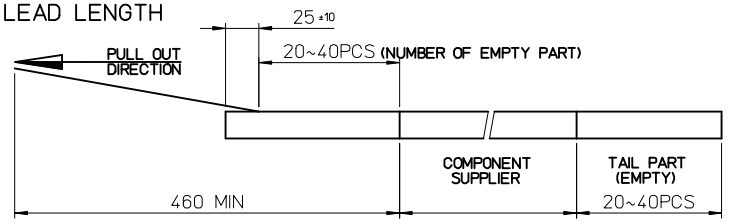

3. PEELING OFF FORCE OF COVER TAPE : 0.1N~0.59N(10.2GF~60GF)
   (PEELING DIRECTION AS SHOW IN FOLLOW FIG.)
   PEELING OFF SPEED : 300mm/Min.(Ref.)



4. FLASH IN ANY PORTION SHOULD BE LESS THAN 0.20mm MAX.

CIRCUIT	A	B	C	D	E	ORDER NO.
71	24.22	20.2	40.4	44	45.5	1041967127
65	22.42	20.2	40.4	44	45.5	1041966527
61	21.22	14.2	28.4	32	33.5	1041966127
51	18.22	14.2	28.4	32	33.5	1041965127
45	16.42	14.2	28.4	32	33.5	1041964527
41	15.22	14.2	28.4	32	33.5	1041964127
33	12.82	11.5		24	25.5	1041963327

NEW RELEASE
EC NO: KOR2016-0027 2015/09/23
DRWN:KYHWANG 2015/12/01
CH'KD:KSKIM 2015/12/07
APPR:YSKIM02
DESCRIPTION
REV
A

QUALITY SYMBOLS
▼=0
▽=0

GENERAL TOLERANCES (UNLESS SPECIFIED)

	mm	INCH
4 PLACES	± ---	± ---
3 PLACES	± ---	± ---
2 PLACES	± 0.05	± ---
1 PLACE	± 0.1	± ---
ANGULAR ± 1 °		

DRAFT WHERE APPLICABLE MUST REMAIN WITHIN DIMENSIONS

DIMENSION STYLE: MM ONLY
SCALE: 1:1
DESIGN UNITS: METRIC
THIRD ANGLE PROJECTION

DRAWN BY: KYHWANG DATE: 2015/09/23
CHECKED BY: KSKIM DATE: 2015/12/01
APPROVED BY: YSKIM02 DATE: 2015/12/07
MATERIAL NO.: SHH TABLE

TITLE: 0.3MM PITCH FPC CONN. BACKFLIP H=0.8 SHIELD, DUAL CONTACT

molex

DOCUMENT NO.: SD-104196-002
SHEET NO.: 3 OF 3
SIZE: A3

THIS DRAWING CONTAINS INFORMATION THAT IS PROPRIETARY TO MOLEX INCORPORATED AND SHOULD NOT BE USED WITHOUT WRITTEN PERMISSION