Electronic circuit breaker - CAPAROC E4 12-24DC/1-10A

1115658

https://www.phoenixcontact.com/us/products/1115658

Please be informed that the data shown in this PDF document is generated from our Online Catalog. Please find the complete data in the user documentation. Our General Terms of Use for Downloads are valid.



Four-channel electronic circuit breaker module for protecting 12 and 24 V DC loads against overload and short circuit. Nominal current adjustable from 1 A to 10 A via LED button. For DIN rail installation via the CAPAROC current rails.

Your advantages

- The benchmark that you can tailor with the individual combination of multi-channel protective modules
- Easy operation for everyone through tool-free assembly, uninterrupted installation, and transparent operating state
- Exceptionally easy design-in with four separately fused channels with the narrowest of space requirements of just 3 mm per channel

Commercial Data

Item number	1115658
Packing unit	1 pc
Minimum order quantity	1 pc
Note	Made to Order (non-returnable)
Sales Key	C34
Product Key	CLA234
GTIN	4063151040192
Weight per Piece (including packing)	112.3 g
Weight per Piece (excluding packing)	86.4 g
Customs tariff number	85363010
Country of origin	DE

Technical Data

Notes

General

Note	LABS release – in accordance with test specification VW PV 3. 10.7:2005-0
	When using CAPAROC E1... modules, for continuous shock in accordance with IEC 60068-2-27 the 6 ms / 15g degree of severity applies

Product properties

Product type	Device circuit breakers
Number of positions	1
No. of channels	4
Number of slots	2

Insulation characteristics

Protection class	III
Pollution degree	2

Electrical properties

No. of channels	4

General

Operating voltage	10 V DC ... 30 V DC
Rated voltage	12 V DC
	24 V DC
Rated current I_N	10 A DC (per channel)
Rated current I_N	1 / 2 / 3 / 4 / 5 / 6 / 7 / 8 / 9 / 10 A DC (adjustable per output channel)
Rated current (pre-adjusted)	4 A
Rated surge voltage	0.5 kV
Tripping method	E (electronic)
Feedback resistance	max. 35 V DC
Switch-on delay	50 ms (each channel preset by default)
	can be adapted with CAPAROC PM IOL and CAPAROC PM PN power modules
Required backup fuse	Only required if I_{max} of the power supply > the short-circuit switching capacity. Integrated failsafe element.
Short-circuit switching capacity	300 A
Dielectric strength	35 V DC (Load circuit)
Fuse	electronic
Efficiency	> 99 %
Closed circuit current I_0	typ. 20 mA (no load at 24 V)
Power dissipation	typ. 0.48 W (no load at 24 V)
	< 6 W (in nominal operation at 24 V and 10 A)

Waiting time after switch off of a channel	5 s (at overload / short circuit)
Measuring tolerance I	± 10 % (typ.)
Temperature derating	16 A (Total current at 65 °C)
	40 A (Total current at 25°C)
MTBF (IEC 61709, SN 29500)	6325945.91 h (at 25 °C with 21 % load)
	1812525.02 h (at 40°C with 34.25% load)
	365459.81 h (at 25°C with 100% load)
Voltage drop	0.14 V (at 10 A)
Fail-safe element	15 A DC (per output channel)

Load circuit

Shutdown time	4 s (with overload 1.1…1.5 x I_N)
	1 s (with overload 1.5…2.0 x I_N)
	0.1 s (with overload 2.0…3.0 x I_N)
	≤ 10 ms (For short circuit > 3.0 x I_N)
Undervoltage switch-off	≤ 8.5 V DC (active)
	≥ 9.2 V DC (inactive)
Overvoltage switch-off	≥ 32.5 V DC (active)
	≤ 30.5 V DC (inactive)
Max. capacitive load	≤ 25000 µF (Depending on the current setting and the short-circuit current available)

Connection data

Fuse-protected output

Connection method	Push-in connection
Stripping length	10 mm
Conductor cross section flexible	0.2 mm² ... 4 mm²
Conductor cross section solid	0.2 mm² ... 4 mm²
Conductor cross section AWG	24 ... 12
Conductor cross section, flexible, with ferrule, with plastic sleeve	0.25 mm² ... 4 mm²
Conductor cross section flexible, with ferrule without plastic sleeve	0.25 mm² ... 4 mm²

LED signaling

Channel LED off	off (Channel switched off)
Channel LED yellow	lit (Channel switched on, channel load > 80%)
	flashing (Programming mode active)
	two flashes (Check the installation, no communication to power module)
Channel LED green	lit (Channel switched on)
Channel LED red	lit (Channel switched off, over- or undervoltage active)
	ON temporarily (Channel switched off, 5 s cool-down phase, overload or short-circuit release)
	flashing (Channel switched off, ready to be switched back on, overload or short-circuit release)
	two flashes (Channel switched off, system total current limit

	exceeded)
Channel LED red-yellow	flashing (Channel switched on, overload mode, capacity approximately 110 ... 150%, shutdown after 5 s)
Channel LED red-green	flashing (Channel switched off, programming mode active, current adjustment after overload or short-circuit release)

Dimensions

Dimensional drawing	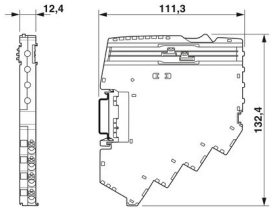
Width	12.4 mm
Height	132.4 mm
Depth	111.3 mm (incl. DIN rail 7.5 mm)

Material specifications

Color	light grey RAL 7035
Material	PA 6 (Housing)
	PA 6 (Pusher)
	PA 6 (Release lever)
	PC (Fiber optics)
Flammability rating according to UL 94	V-0

Environmental and real-life conditions

Ambient conditions

Degree of protection	IP20
Ambient temperature (operation)	-30 °C ... 65 °C (The temperature range of the power module must be taken into consideration)
Ambient temperature (storage/transport)	-40 °C ... 70 °C
Altitude	≤ 4000 m (amsl (above mean sea level))
Humidity test	96 h, 95 % RH, 40 °C
Shock (operation)	30g (11 ms period, half-sine shock pulse, according to IEC 60068-2-27)
	25g (6 ms duration, half-sine shock pulse in accordance with IEC 60068-2-27, continuous shock)
Vibration (operation)	5g (10 ... 150 Hz / 10 cycles / axis / X, Y, Z)

Approval data

UL approval

Identification	UL/C-UL Listed UL 508
	UL Recognized UL 2367

Standards and regulations

Standards/specifications	EN 61000-6-2
Standards/specifications	EN 61000-6-3
Standards/specifications	EN 60068-2-78
Standards/specifications	EN 50178
Standards/specifications	EN 60068-2-6
Standards/specifications	EN 60068-2-27

Mounting

Mounting type	pluggable onto CAPAROC CR… current rail

Drawings

Diagram

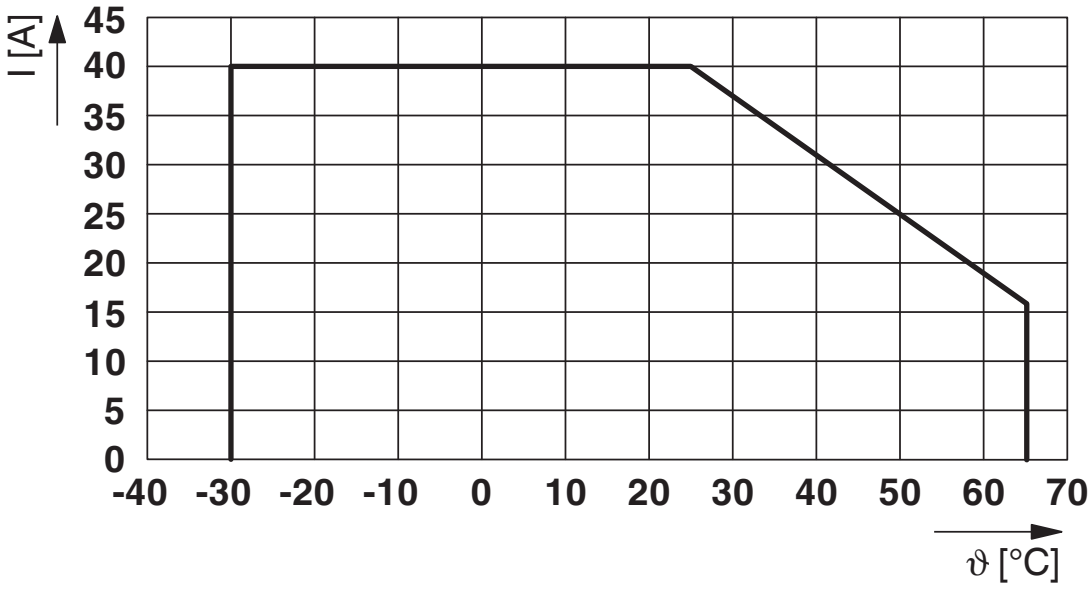

Max. permissible current in relation to the ambient temperature

Dimensional drawing

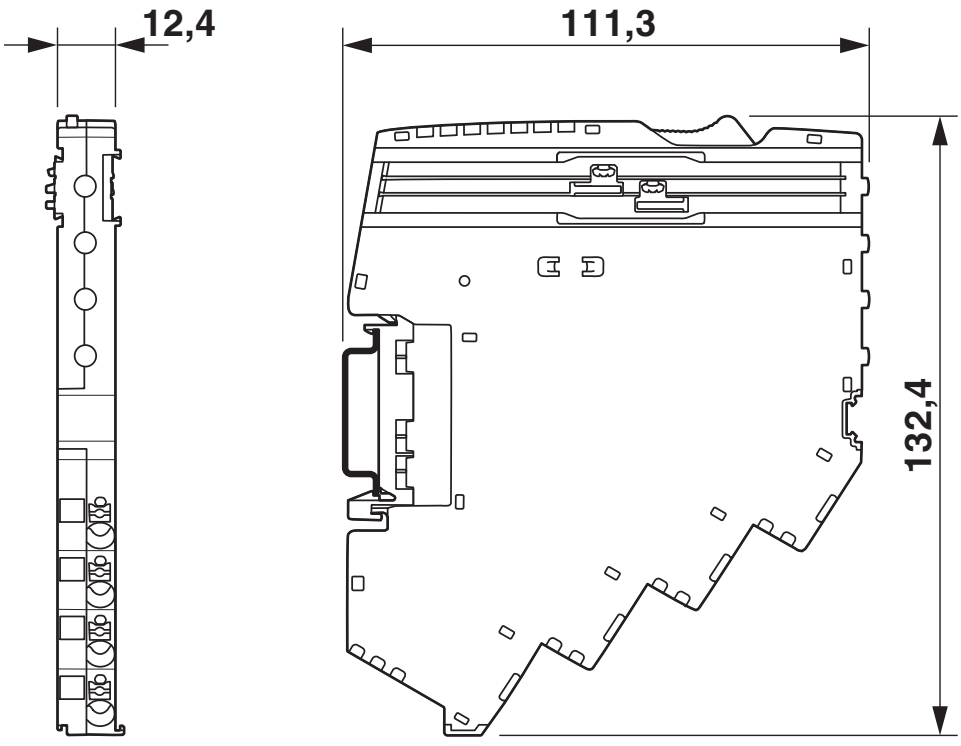

Application drawing

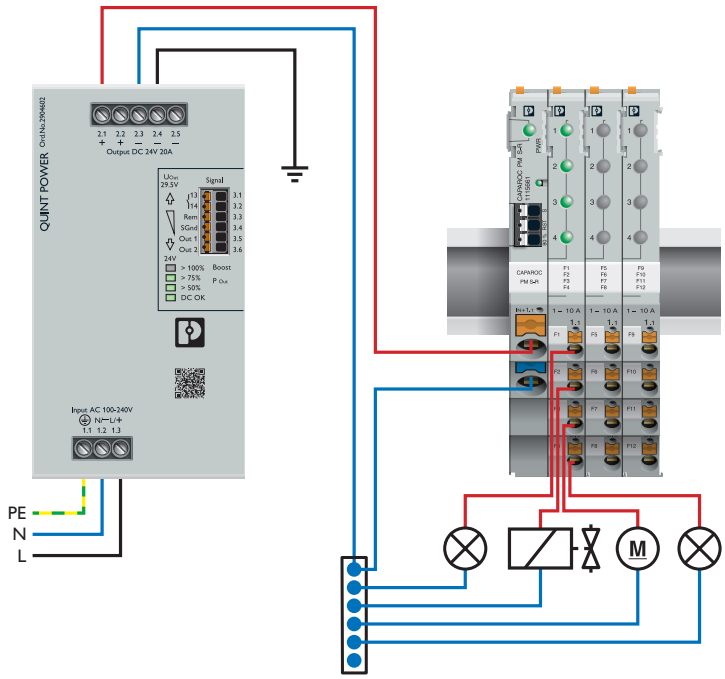

Diagram

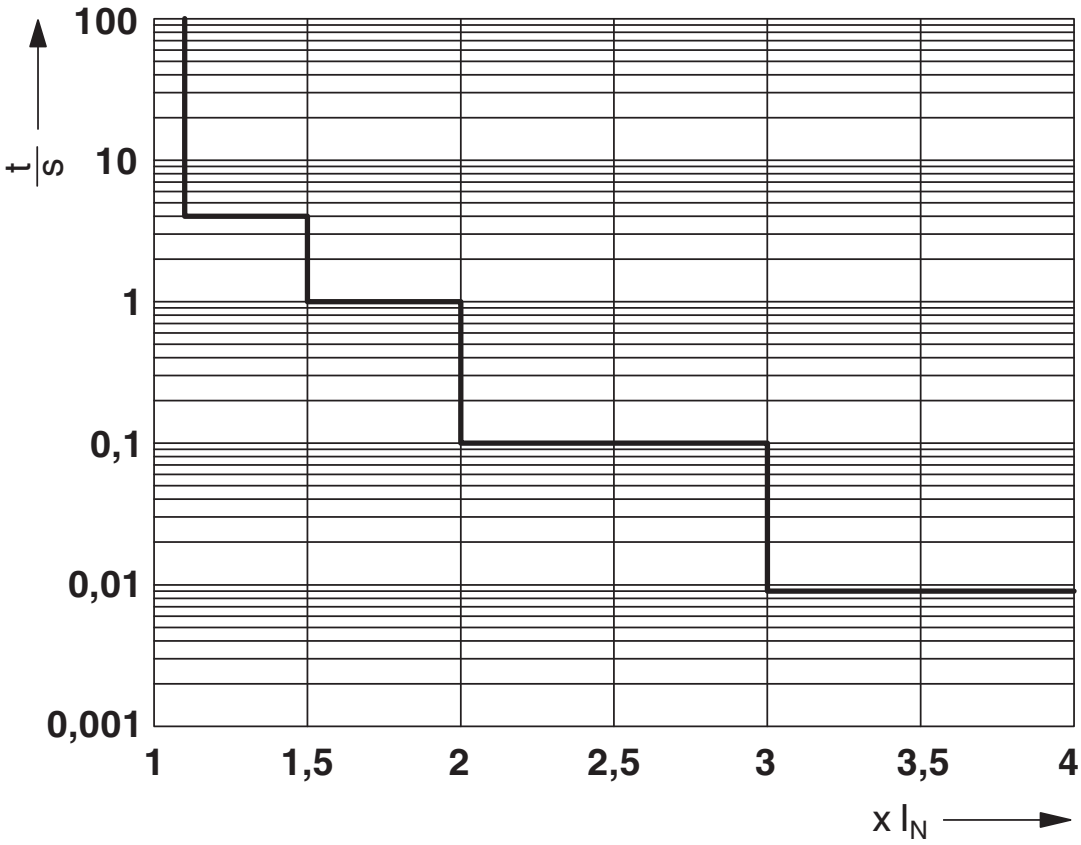

Trigger characteristic

Approvals

UL Recognized
Approval ID: FILE E 317172

UL Listed
Approval ID: FILE E 123528

cUL Listed
Approval ID: FILE E 123528

cULus Listed

Classifications

ECLASS

ECLASS-9.0	27141116
ECLASS-10.0.1	27140401
ECLASS-11.0	27140401

ETIM

ETIM 8.0	EC003538

UNSPSC

UNSPSC 21.0	39121400

Environmental Product Compliance

REACh SVHC	Lead 7439-92-1

Mandatory Accessories

Busbar

Busbar - CAPAROC CR 20 - 1110989

https://www.phoenixcontact.com/us/products/1110989

Busbar for CAPAROC system with 20 slots. For installation on a DIN rail.

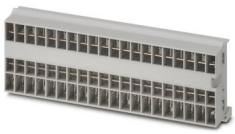

Busbar

Busbar - CAPAROC CR 8 - 1115672

https://www.phoenixcontact.com/us/products/1115672

Busbar for the CAPAROC system with 8 slots. For installation on a DIN rail.



Power module

Power module - CAPAROC PM S-R - 1115661

https://www.phoenixcontact.com/us/products/1115661



Power module with status output and reset input for supplying the CAPAROC circuit breaker system with 12 or 24 V DC. For DIN rail installation via the CAPAROC current rails.

Power module

Power module - CAPAROC PM PN - 1110986

https://www.phoenixcontact.com/us/products/1110986



Power module with PROFINET interface for supplying the CAPAROC circuit breaker system with 12 or 24 V DC. Additional system interface for communication with the power supply. For DIN rail installation via the CAPAROC current rails.

Accessories

Potential distributors

Potential distributors - CAPAROC PD 0V - 1110987

https://www.phoenixcontact.com/us/products/1110987



Potential distributor with Push-in connections for directly connecting the 0 V return conductor in the CAPAROC system. For DIN rail installation via the CAPAROC current rails.

Marker for terminal blocks

Marker for terminal blocks - UC-TMF 6 - 0818140

https://www.phoenixcontact.com/us/products/0818140



Marker for terminal blocks, Sheet, white, unlabeled, can be labeled with: BLUEMARK ID COLOR, BLUEMARK ID, BLUEMARK CLED, PLOTMARK, CMS-P1-PLOTTER, mounting type: snapped, for terminal block width: 6.2 mm, lettering field size: 5.6 x 5.1 mm, Number of individual labels: 80

Marker for terminal blocks

Marker for terminal blocks - UCT-TMF 6 - 0828746

https://www.phoenixcontact.com/us/products/0828746



Marker for terminal blocks, Sheet, white, unlabeled, can be labeled with: TOPMARK NEO, TOPMARK LASER, BLUEMARK ID COLOR, BLUEMARK ID, BLUEMARK CLED, THERMOMARK PRIME, THERMOMARK CARD 2.0, THERMOMARK CARD, mounting type: snapped, for terminal block width: 6.2 mm, lettering field size: 5.4 x 4.7 mm, Number of individual labels: 60

Marker for terminal blocks

Marker for terminal blocks - UC-TM 12 - 0819194

https://www.phoenixcontact.com/us/products/0819194



Marker for terminal blocks, Sheet, white, unlabeled, can be labeled with: BLUEMARK ID COLOR, BLUEMARK ID, BLUEMARK CLED, PLOTMARK, CMS-P1-PLOTTER, mounting type: snapped, for terminal block width: 12 mm, lettering field size: 11.45 x 10.5 mm, Number of individual labels: 40

Marker for terminal blocks

Marker for terminal blocks - UCT-TM 12 - 0829144

https://www.phoenixcontact.com/us/products/0829144



Marker for terminal blocks, Sheet, white, unlabeled, can be labeled with: TOPMARK NEO, TOPMARK LASER, BLUEMARK ID COLOR, BLUEMARK ID, BLUEMARK CLED, THERMOMARK PRIME, THERMOMARK CARD 2.0, THERMOMARK CARD, mounting type: snapped, for terminal block width: 12 mm, lettering field size: 10.8 x 9.6 mm, Number of individual labels: 30

Busbar

Busbar - CAPAROC CR EXT20 - 1115674

https://www.phoenixcontact.com/us/products/1115674

Extension busbar with 20 slots for the CAPAROC system. For installation on a DIN rail.



Busbar

Busbar - CAPAROC CR EXT8 - 1110990

https://www.phoenixcontact.com/us/products/1110990



Extension busbar with 8 slots for CAPAROC system. For installation on a DIN rail.

Busbar

Busbar - CAPAROC CR EXT4 - 1110991

https://www.phoenixcontact.com/us/products/1110991



Extension busbar with 4 slots for the CAPAROC system. For installation on a DIN rail.

Electronic circuit breaker - CAPAROC E4 12-24DC/1-10A

1115658

https://www.phoenixcontact.com/us/products/1115658

Metal part

Metal part - CAPAROC CR CON - 1270955

https://www.phoenixcontact.com/us/products/1270955



Metal extension rails from connecting CAPAROC initial busbars.

Phoenix Contact 2022 © - all rights reserved
https://www.phoenixcontact.com

Phoenix Contact USA
586 Fulling Mill Road
Middletown, PA 17057, United States
(+717) 944-1300
info@phoenixcon.com