# FEMALE PLUG M12 90° ANGLED TO MALE PLUG M12 STRAIGHT

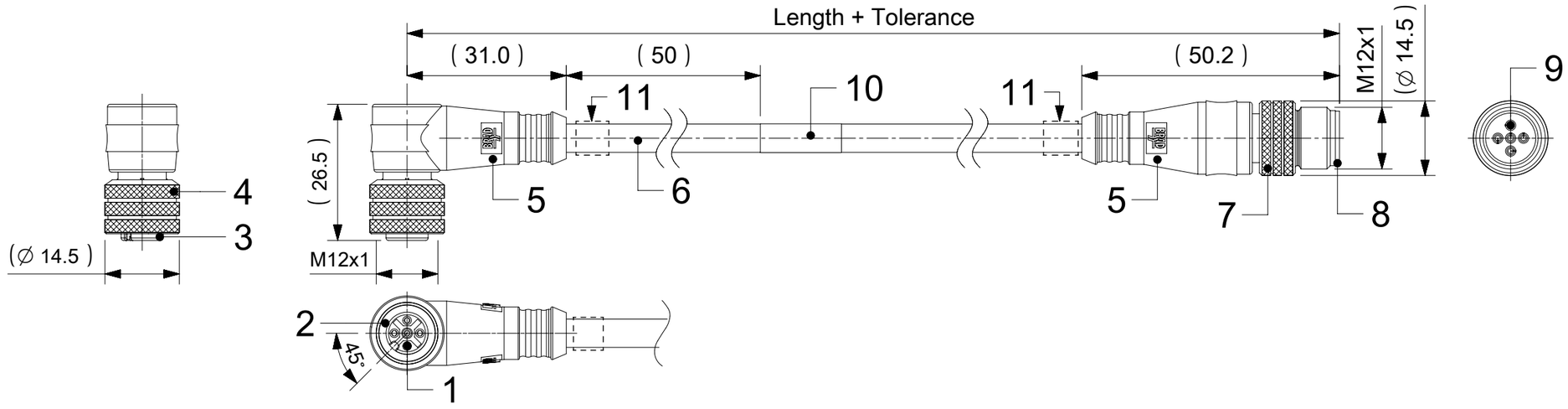


NOTES:

RATED VOLTAGE: 3, 4 contacts 250V per IEC 60664
5 contacts 60V per IEC 60664
5 contacts 250V per UL 2238
8 contacts 30V per IEC 60664

RATED CURRENT: 3, 4, 5 contacts 4A
8 contacts 2A

PROTECTION CLASS: IP 67

TEMPERATURE: -25°C / +85°C

* FOR CABLES Ixx USE PRINTING ON THE CABLE IN THE SAME MEASUREMENT LIKE FOR LABEL – ENGINEERING No

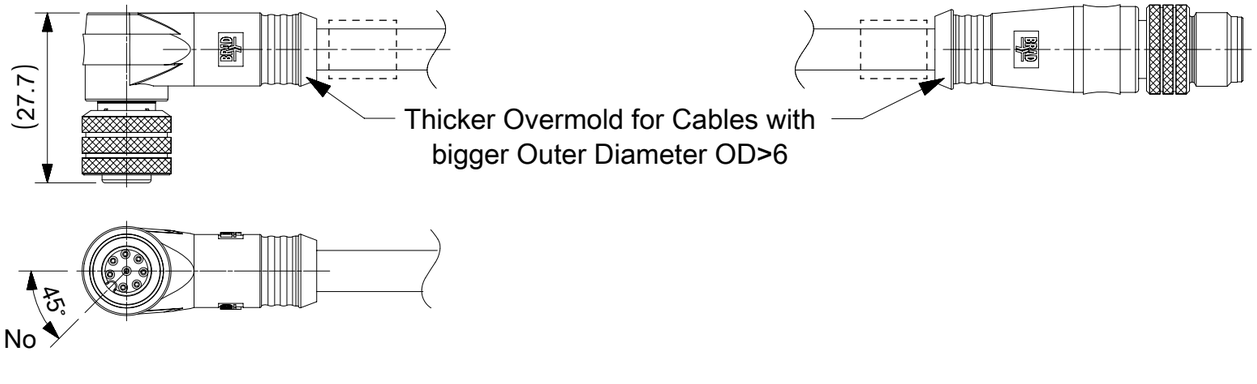


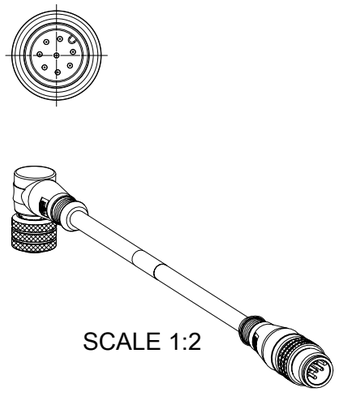

SCALE 1:2

CONTACTS POSITION FRONT VIEW:

| | 3 CONTACTS | 4 CONTACTS | 5 CONTACTS | 8 CONTACTS |
|---|---|---|---|---|
| FEMALE | 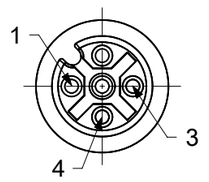 | 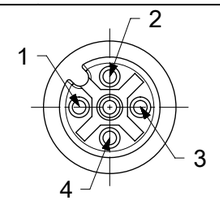 | 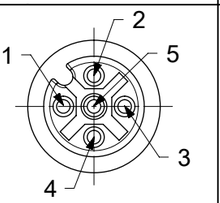 | 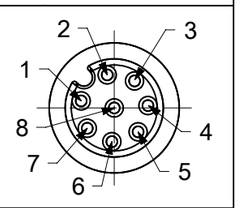 |
| MALE | 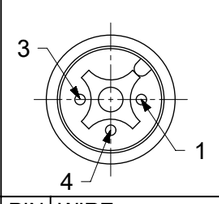 | 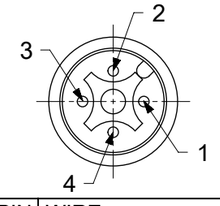 | 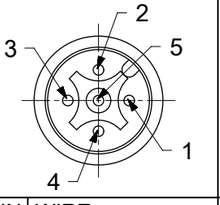 | 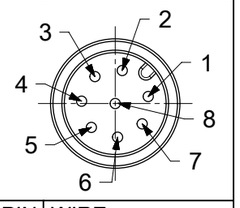 |

| CONNECTIONS | PIN | WIRE | PIN | WIRE | PIN | WIRE | PIN | WIRE |
|---|---|---|---|---|---|---|---|---|
| | 1 | BROWN | 1 | BROWN | 1 | BROWN | 1 | WHITE |
| | 2 | --- | 2 | WHITE | 2 | WHITE | 2 | BROWN |
| | 3 | BLUE | 3 | BLUE | 3 | BLUE | 3 | GREEN |
| | 4 | BLACK | 4 | BLACK | 4 | BLACK | 4 | YELLOW |
| | 5 | --- | 5 | --- | 5 | GREY OR GREEN/YELLOW | 5 | GREY |
| | | | | | | | 6 | PINK |
| | | | | | | | 7 | BLUE |
| | | | | | | | 8 | RED |

CODING REQUIRED TO IEC 61076-2-101

FOR OPTIONS SEE - NUMERICAL CODE - ON SHEET 2

| ITEM | QTY. | DESCRIPTION | MATERIAL | FINISH |
|---|---|---|---|---|
| 11 | SEE PART LIST | ID CARRIER | PVC | TRANSPARENT |
| 10 | 1 | LABEL YELLOW | VINYL | --- |
| | - | PRINTING FOR CABLES Ixx | --- | --- |
| 9 | 3 / 4 / 5 / 8 | CONTACT MALE | SEE PART LIST | SELECTIVE Au OVER Ni |
| 8 | 1 | INSERT MALE BLACK | SEE PART LIST | --- |
| 7 | 1 | COUPLING NUT MALE | SEE PART LIST | --- |
| 6 | - | CABLE | SEE SHEET 2 | --- |
| 5 | - | OVERMOULDING BLACK | SEE PART LIST | --- |
| 4 | 1 | COUPLING NUT FEMALE | SEE PART LIST | --- |
| 3 | 1 | INSERT FEMALE BLACK | SEE PART LIST | --- |
| 2 | 1 | O-RING RED | FPM | --- |
| 1 | 3 / 4 / 5 / 8 | CONTACT FEMALE | SEE PART LIST | SELECTIVE Au OVER Ni |

THIS DRAWING CONTAINS INFORMATION THAT IS PROPRIETARY TO MOLEX ELECTRONIC TECHNOLOGIES, LLC AND SHOULD NOT BE USED WITHOUT WRITTEN PERMISSION

FUNCTIONAL SYMBOLS: FA = 0, FC = 0, FP = 0

DIVISIONAL SYMBOLS

DIMENSION UNITS: mm — SCALE: 1:1

GENERAL TOLERANCES (UNLESS SPECIFIED)

| | |
|---|---|
| ANGULAR TOL | ± 1.0 ° |
| 4 PLACES | ± |
| 3 PLACES | ± |
| 2 PLACES | ± 0.05 |
| 1 PLACE | ± 0.3 |
| 0 PLACES | ± 0.5 |

DRAFT WHERE APPLICABLE MUST REMAIN WITHIN DIMENSIONS

CURRENT REV DESC:

EC NO: 684766
DRWN: SSM 2021/11/03
CHK'D: RSILLER 2021/11/10
APPR: RSILLER 2021/11/10

INITIAL REVISION:
DRWN: JMARSZALEK 2016/10/06
APPR: RSILLER 2016/12/08

THIRD ANGLE PROJECTION | DRAWING: A3-SIZE | SERIES: 120066

molex

CSE M12 XP AC FE RA MA STR XM DE

PRODUCT CUSTOMER DRAWING

| DOCUMENT NUMBER | DOC TYPE | DOC PART | REVISION |
|---|---|---|---|
| 1200660973 | PSD | 000 | A9 |

| MATERIAL NUMBER | CUSTOMER | SHEET NUMBER |
|---|---|---|
| SEE SHEET 3, 4 | GENERAL MARKET | 1 OF 4 |

| DOCUMENT STATUS | P1 | RELEASE DATE | 2021/11/10 13:49:49 |
|---|---|---|---|

# ENGINEERING NO. - NUMERICAL CODE (Available parts see PART LIST table. Other parts available upon request).

| 8 | 8 | X | 0 | X | 1 | X | X | X | X | X | X | X | X |
|---|---|---|---|---|---|---|---|---|---|---|---|---|---|
| | | | | | | | | | | | | OPTIONS | |

88=Micro-Change M12x1 Double ended

Contacts:
3=3 Contacts
4=4 Contacts
5=5 Contacts
8=8 Contacts

Heads style:
031=Plug Female 90° to Plug Male Straight
021=Plug Female 90° to Plug Male Straight with Female Coupling Nut

Cable type: See Table

Units:
M=Meter
C=Centimeter

Length
Examples:
005=0.5 unit
010=1 unit
100=10 units

Coupling Nut:
Blank (Standard)=Knurled Brass Ni Plated
1=Hexagonal Stainless steel
5=Knurled Derlin
7=Knurled Brass Ni Plated, Teflon Coated
Blank=7 for cables I20, I26, K03, K05, P82, S26
9=Knurled / Hexagonal Brass Ni Plated SW13

H= 2 pcs. of I/D Carrier PVC Transparent (Cables Ixx & P82 always with 2 pcs. of I/D Carrier even if no H in Engineering No.)

Overmold color:
Blank (Standard)=Black TPU
Blank=Yellow TPU for cables A09, S19, S20, S26
Blank=Yellow TPE-E for cables K03, K05
A=Grey / G=Black / Y=Yellow

COUPLING NUT
FEMALE MALE

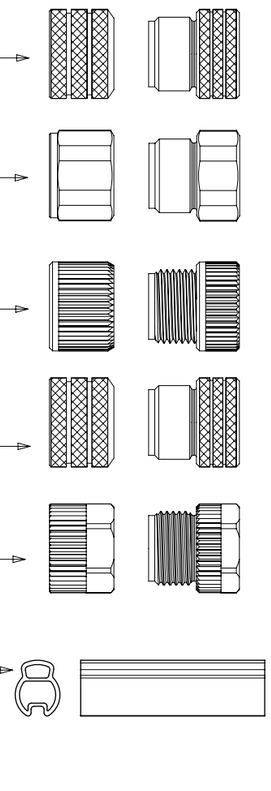

# CABLE INFORMATION (for more information see Cable Data Sheet).

| CABLE TYPE | NO. OF WIRES | CROSS SECTION | CABLE JACKET | UL | CSA | STATIC: TEMP. / BENDING RADIUS | DYNAMIC: TEMP. / BENDING RADIUS | DRAG CHAIN | SHIELD |
|---|---|---|---|---|---|---|---|---|---|
| I03 | 3 / 4 / 5 | 0.34mm² | PVC CEI GREY | - | - | -30°C to +70°C | -5°C to +70°C | - | - |
| I20 | 3 / 4 | 0.34mm² | PVC CEI GREY | - | - | -30°C to +70°C | -5°C to +70°C | - | YES |
| I26 | 5 | 0.34mm² | PVC CEI GREY | - | - | -30°C to +70°C | -5°C to +70°C | - | YES |
| K03 | 4 | 18AWG | TPE YELLOW | UL ITC or PLC | I/II A/B 90°C/300V | max 105°C | - | - | - |
| K05 | 3 / 4 / 5 | 22AWG | TPE YELLOW | UL ITC or PLC | I/II A/B 90°C/300V | max 105°C | - | - | - |
| P82 | 3 / 4 / 5 | 0.34mm² | PUR IRR ORANGE | - | - | -50°C to +105°C, >5xO.D. | -40°C to +105°C, >7.5xO.D. | - | - |
| S20 | 3 / 4 / 5 | 0.34mm² | PVC YELLOW | UL 2661/1731 | C22.2 II A 105°C/300V | -30°C to +105°C | - | - | YES |
| E02 | 3 / 4 / 5 / 8 | 0.25mm² | PVC BLACK | UL 2464/1729 | C22.2 I/II A/B 80°C/300V | -30°C to +80°C, 10xO.D. | -10°C to +80°C, 15xO.D. | - | - |
| E03 | 3 / 4 / 5 | 0.34mm² | PVC BLACK | UL 2464/1729 | C22.2 I/II A/B 80°C/300V | -30°C to +80°C, 10xO.D. | -10°C to +80°C, 15xO.D. | - | - |
| H09 | 3 / 4 / 5 | 0.34mm² | PUR BLACK LS0H | UL 21198/10493 | C22.2 I/II A/B 80°C/300V | -40°C to +80°C, 5xO.D. | -25°C to +80°C, 10xO.D. | 2 000 000 cycles at 20°C, Temp. range +5°C to +60°C | - |
| P03 | 3 / 4 / 5 | 0.34mm² | PUR / PVC BLACK | - | - | -30°C to +80°C, >7xO.D. | -5°C to +80°C, >15xO.D. | - | - |
| H08 | 8 | 0.25mm² | PUR BLACK LS0H | UL 21198/10493 | UL 21198/10493 | -40°C to +80°C, >5xO.D. | -25°C to +80°C, >10xO.D. | 2 000 000 cycles, Temp max 60°C | - |
| P02 | 8 | 0.25mm² | PUR / PVC BLACK | - | - | -30°C to +80°C, >7xO.D. | -5°C to +80°C, >15xO.D. | - | - |

# CABLE LENGTH TOLERANCES

| OVER | UP TO AND INCLUDING | TOLERANCES |
|---|---|---|
| 0 | 305mm | +19mm |
| 305mm | 915mm | +45mm |
| 915mm | 1830mm | +56mm |
| 1830mm | 3660mm | +89mm |
| 3660mm | 7320mm | +165mm |
| 7320mm | 14640mm | +317mm |
| 14640mm | 30500mm | +610mm |
| 30500mm | > | +2% of finished length |

THIS DRAWING CONTAINS INFORMATION THAT IS PROPRIETARY TO MOLEX ELECTRONIC TECHNOLOGIES, LLC AND SHOULD NOT BE USED WITHOUT WRITTEN PERMISSION

FUNCTIONAL SYMBOLS: FA = 0, FC = 0, FD = 0
DIVISIONAL SYMBOLS

| DIMENSION UNITS | SCALE |
|---|---|
| mm | 1:1 |

GENERAL TOLERANCES (UNLESS SPECIFIED)

| | |
|---|---|
| ANGULAR TOL | ± 1.0 ° |
| 4 PLACES | ± |
| 3 PLACES | ± |
| 2 PLACES | ± 0.05 |
| 1 PLACE | ± 0.3 |
| 0 PLACES | ± 0.5 |

DRAFT WHERE APPLICABLE MUST REMAIN WITHIN DIMENSIONS

CURRENT REV DESC:

EC NO: 684766
DRWN: SSM 2021/11/03
CHK'D: RSILLER 2021/11/10
APPR: RSILLER 2021/11/10

INITIAL REVISION:
DRWN: JMARSZALEK 2016/10/06
APPR: RSILLER 2016/12/08

molex

CSE M12 XP AC FE RA MA STR XM DE

PRODUCT CUSTOMER DRAWING

| DOCUMENT NUMBER | DOC TYPE | DOC PART | REVISION |
|---|---|---|---|
| 1200660973 | PSD | 000 | A9 |

| THIRD ANGLE PROJECTION | DRAWING | SERIES | MATERIAL NUMBER | CUSTOMER | SHEET NUMBER |
|---|---|---|---|---|---|
| | A3-SIZE | 120066 | SEE SHEET 3, 4 | GENERAL MARKET | 2 OF 4 |

| DOCUMENT STATUS | P1 | RELEASE DATE | 2021/11/10 13:49:49 |
|---|---|---|---|

FORMAT: master-tb-prod-A3
REVISION: J
DATE: 2020/01/14

# PART LIST

| No. | Part No. | Engineering No. | Cable Length |
|---|---|---|---|
| 1 | 1200060052 | 884031I20M005 | 0.5m |
| 2 | 1200060053 | 884031I20M010 | 1m |
| 3 | 1200060054 | 884031I20M015 | 1.5m |
| 4 | 1200060055 | 884031I20M020 | 2m |
| 5 | 1200070132 | 883031I03M003 | 0.3m |
| 6 | 1200070133 | 883031I03M006 | 0.6m |
| 7 | 1200070134 | 883031I03M010 | 1m |
| 8 | 1200070136 | 883031I03M020 | 2m |
| 9 | 1200070137 | 883031I03M030 | 3m |
| 10 | 1200070138 | 883031I03M050 | 5m |
| 11 | 1200070152 | 883031S20M010 | 1m |
| 12 | 1200070153 | 883031S20M020 | 2m |
| 13 | 1200070156 | 883031S20M050 | 5m |
| 14 | 1200070522 | 884031I03M020 | 2m |
| 15 | 1200070523 | 884031I03M030 | 3m |
| 16 | 1200070534 | 884031S20M030 | 3m |
| 17 | 1200070651 | 884031I03M006 | 0.6m |
| 18 | 1200070768 | 884031S20M050 | 5m |
| 19 | 1200070783 | 884031S20M100H | 10m |
| 20 | 1200071010 | 884031P82M100 | 10m |
| 21 | 1200071096 | 884031P82M0037 | 0.3m |
| 22 | 1200071138 | 884031S20M010H | 1m |
| 23 | 1200071139 | 884031S20M020H | 2m |
| 24 | 1200071143 | 884031P82M0107 | 1m |
| 25 | 1200071144 | 884031P82M0207 | 2m |
| 26 | 1200071164 | 884031S20M003H | 0.3m |
| 27 | 1200071179 | 884031S20M006H | 0.6m |
| 28 | 1200071183 | 884031S20M030H | 3m |
| 29 | 1200071189 | 884031S20M050H | 5m |
| 30 | 1200071200 | 884031S20M015H | 1.5m |
| 31 | 1200071236 | 884031S20M005H | 0.5m |
| 32 | 1200071280 | 884031S20M040H | 4m |
| 33 | 1200071318 | 884031P82M0067 | 0.6m |
| 34 | 1200071341 | 884031I20M030 | 3m |
| 35 | 1200071493 | 883031P82M0507 | 5m |

| No. | Part No. | Engineering No. | Cable Length |
|---|---|---|---|
| 36 | 1200071575 | 884031P82M006 | 0.6m |
| 37 | 1200071576 | 884031P82M010 | 1m |
| 38 | 1200071577 | 884031P82M015 | 1.5m |
| 39 | 1200071578 | 884031P82M0307 | 3m |
| 40 | 1200071579 | 884031P82M050 | 5m |
| 41 | 1200071581 | 884031P82M020 | 2m |
| 42 | 1200071832 | 884031I20M050 | 5m |
| 43 | 1200071833 | 884031I20M100 | 10m |
| 44 | 1200071893 | 884031S20M100 | 10m |
| 45 | 1200071994 | 885031P82M0307 | 3m |
| 46 | 1200072696 | 883031S20M010H | 1m |
| 47 | 1200072725 | 885031I26M005 | 0.5m |
| 48 | 1200072726 | 885031I26M010 | 1m |
| 49 | 1200659070 | 884031I20M010Y | 1m |
| 50 | 1200659071 | 884031I20M015Y | 1.5m |
| 51 | 1200659115 | 884031I20M005Y | 0.5m |
| 52 | 1200660374 | 884031K05M005 | 0.5m |
| 53 | 1200660375 | 884031K05M006 | 0.6m |
| 54 | 1200660376 | 884031K05M010 | 1m |
| 55 | 1200660377 | 884031K05M015 | 1.5m |
| 56 | 1200660378 | 884031K05M020 | 2m |
| 57 | 1200660379 | 884031K05M030 | 3m |
| 58 | 1200660380 | 884031K05M040 | 4m |
| 59 | 1200660381 | 884031K05M050 | 5m |
| 60 | 1200660382 | 884031K05M060 | 6m |
| 61 | 1200660383 | 884031S20M010 | 1m |
| 62 | 1200660546 | 884031K05M100 | 10m |
| 63 | 1200661046 | 885031K03M010 | 1m |
| 64 | 1200661047 | 885031K03M020 | 2m |
| 65 | 1200661049 | 885031K03M040 | 4m |
| 66 | 1200661050 | 885031K03M050 | 5m |
| 67 | 1200661769 | 884031K05M150 | 15m |
| 68 | 1200669556 | 885031P03M015 | 1.5m |
| 69 | 1200660969 | 884031K03M003 | 0.3m |
| 70 | 1200661481 | 884031K03M120 | 12m |

| No. | Part No. | Engineering No. | Cable Length |
|---|---|---|---|
| 71 | 1200660971 | 884031K03M006 | 0.6m |
| 72 | 1200660973 | 884031K03M010 | 1m |
| 73 | 1200660975 | 884031K03M015 | 1.5m |
| 74 | 1200660976 | 884031K03M020 | 2m |
| 75 | 1200660977 | 884031K03M030 | 3m |
| 76 | 1200660978 | 884031K03M040 | 4m |
| 77 | 1200660980 | 884031K03M050 | 5m |
| 78 | 1200660982 | 884031K03M060 | 6m |
| 79 | 1200660983 | 884031K03M070 | 7m |
| 80 | 1200660984 | 884031K03M090 | 9m |
| 81 | 1200660985 | 884031K03M100 | 10m |
| 82 | 1200665007 | 884031P82M0157 | 1.5m |
| 83 | 1200665039 | 884031S20M003 | 0.3m |
| 84 | 1200665053 | 884031S20M060H | 6m |
| 85 | 1200665074 | 884031K05M080 | 8m |
| 86 | 1200668052 | 883031S20M006 | 0.6m |
| 87 | 1200668071 | 884031S20M020 | 2m |
| 88 | 1200668191 | 883031S20M030 | 3m |
| 89 | 1200668221 | 884031P82M0407 | 4m |
| 90 | 1200668237 | 883031S20M100 | 10m |
| 91 | 1200668247 | 884031P82M0057 | 0.5m |
| 92 | 1200668258 | 883031I03M080 | 8m |
| 93 | 1200668287 | 884031I20M025 | 2.5m |
| 94 | 1200668392 | 884031P82M0607 | 6m |
| 95 | 1200668531 | 884031P82M0507 | 5m |
| 96 | 1200668532 | 884031P82M1007 | 10m |
| 97 | 1200668647 | 884031P82M0067Y | 0.6m |
| 98 | 1200668666 | 884031P82M0107Y | 1m |
| 99 | 1200668667 | 884031I20M030Y | 3m |
| 100 | 1200070443 | 884021S20M003 | 0.3m |
| 101 | 1200070444 | 884021S20M006 | 0.6m |
| 102 | 1200070445 | 884021S20M010 | 1m |
| 103 | 1200070446 | 884021S20M020 | 2m |
| 104 | 1200070447 | 884021S20M030 | 3m |
| 105 | 1200070449 | 884021S20M050 | 5m |

| Pos. | Part No. | Engineering No. | Cable Length |
|---|---|---|---|
| 106 | 1200668160 | 883021S20M010 | 1m |
| 107 | 1200668608 | 883031E02M020 | 2m |
| 108 | 1200668613 | 883031E02M030 | 3m |
| 109 | 1200659035 | 883031E02M050 | 5m |
| 110 | 1200668612 | 883031E02M100 | 10m |
| 111 | 1200668908 | 883031E03M003H | 0.3m |
| 112 | 1200070118 | 883031E03M006 | 0.6m |
| 113 | 1200668909 | 883031E03M006H | 0.6m |
| 114 | 1200070119 | 883031E03M010 | 1m |
| 115 | 1200668910 | 883031E03M010H | 1m |
| 116 | 1200070945 | 883031E03M015 | 1.5m |
| 117 | 1200668967 | 883031E03M015H | 1.5m |
| 118 | 1200070121 | 883031E03M020 | 2m |
| 119 | 1200072445 | 883031E03M020H | 2m |
| 120 | 1200070123 | 883031E03M030 | 3m |
| 121 | 1200668911 | 883031E03M030H | 3m |
| 122 | 1200072164 | 883031E03M040 | 4m |
| 123 | 1200668968 | 883031E03M040H | 4m |
| 124 | 1200070125 | 883031E03M050 | 5m |
| 125 | 1200668912 | 883031E03M050H | 5m |
| 126 | 1200668175 | 883031E03M060 | 6m |
| 127 | 1200070127 | 883031E03M100 | 10m |
| 128 | 1200658762 | 883031H09M006 | 0.6m |
| 129 | 1200658763 | 883031H09M010 | 1m |
| 130 | 1200658764 | 883031H09M020 | 2m |
| 131 | 1200658765 | 883031H09M030 | 3m |
| 132 | 1200669349 | 883031H09M030H | 3m |
| 133 | 1200658766 | 883031H09M040 | 4m |
| 134 | 1200658767 | 883031H09M050 | 5m |
| 135 | 1200658768 | 883031H09M100 | 10m |
| 136 | 1200070140 | 883031P03M003 | 0.3m |
| 137 | 1200070141 | 883031P03M006 | 0.6m |
| 138 | 1200070142 | 883031P03M010 | 1m |
| 139 | 1200668324 | 883031P03M010G | 1m |
| 140 | 1200071121 | 883031P03M010H | 1m |
| 141 | 1200070143 | 883031P03M020 | 2m |
| 142 | 1200668325 | 883031P03M020G | 2m |

THIS DRAWING CONTAINS INFORMATION THAT IS PROPRIETARY TO MOLEX ELECTRONIC TECHNOLOGIES, LLC AND SHOULD NOT BE USED WITHOUT WRITTEN PERMISSION

FUNCTIONAL SYMBOLS
FA = 0
FC = 0
FP = 0
DIVISIONAL SYMBOLS

| DIMENSION UNITS | SCALE |
|---|---|
| mm | 1:1 |

GENERAL TOLERANCES (UNLESS SPECIFIED)

| | | |
|---|---|---|
| ANGULAR TOL | ± | 1.0 ° |
| 4 PLACES | ± | |
| 3 PLACES | ± | |
| 2 PLACES | ± | 0.05 |
| 1 PLACE | ± | 0.3 |
| 0 PLACES | ± | 0.5 |

DRAFT WHERE APPLICABLE MUST REMAIN WITHIN DIMENSIONS

CURRENT REV DESC:

EC NO: 684766
DRWN: SSM 2021/11/03
CHK'D: RSILLER 2021/11/10
APPR: RSILLER 2021/11/10

INITIAL REVISION:
DRWN: JMARSZALEK 2016/10/06
APPR: RSILLER 2016/12/08

THIRD ANGLE PROJECTION | DRAWING: A3-SIZE | SERIES: 120066

molex

CSE M12 XP AC FE RA MA STR XM DE

PRODUCT CUSTOMER DRAWING

| DOCUMENT NUMBER | DOC TYPE | DOC PART | REVISION |
|---|---|---|---|
| 1200660973 | PSD | 000 | A9 |

| MATERIAL NUMBER | CUSTOMER | SHEET NUMBER |
|---|---|---|
| SEE PART LIST | GENERAL MARKET | 3 OF 4 |

| DOCUMENT STATUS | P1 | RELEASE DATE | 2021/11/10 13:49:49 |
|---|---|---|---|

FORMAT: master_Portrait-A3
REVISION: J
DATE: 2020/01/16

| Pos. | Part No. | Engineering No. | Cable Length |
|---|---|---|---|
| 143 | 1200668753 | 883031P03M020H | 2m |
| 144 | 1200070144 | 883031P03M030 | 3m |
| 145 | 1200668326 | 883031P03M030G | 3m |
| 146 | 1200070145 | 883031P03M050 | 5m |
| 147 | 1200668520 | 883031P03M070 | 7m |
| 148 | 1200070146 | 883031P03M100 | 10m |
| 149 | 1200070507 | 884031E03M003 | 0.3m |
| 150 | 1200070508 | 884031E03M006 | 0.6m |
| 151 | 1200070509 | 884031E03M010 | 1m |
| 152 | 1200668361 | 884031E03M015 | 1.5m |
| 153 | 1200070511 | 884031E03M020 | 2m |
| 154 | 1200070512 | 884031E03M030 | 3m |
| 155 | 1200669260 | 884031E03M030H | 3m |
| 156 | 1200070904 | 884031E03M050 | 5m |
| 157 | 1200071157 | 884031E03M060 | 6m |
| 158 | 1200071278 | 884031E03M100 | 10m |
| 159 | 1200072011 | 884031E03M200 | 20m |
| 160 | 1200668669 | 884031H09M006 | 0.6m |
| 161 | 1200668846 | 884031H09M008 | 0.8m |
| 162 | 1200668210 | 884031H09M009 | 0.9m |
| 163 | 1200668484 | 884031H09M010 | 1m |
| 164 | 1200668848 | 884031H09M013 | 1.3m |
| 165 | 1200668488 | 884031H09M015 | 1.5m |
| 166 | 1200668845 | 884031H09M018 | 1.8m |
| 167 | 1200668212 | 884031H09M020 | 2m |
| 168 | 1200668847 | 884031H09M021 | 2.1m |
| 169 | 1200668215 | 884031H09M030 | 3m |
| 170 | 1200668670 | 884031H09M050 | 5m |
| 171 | 1200668671 | 884031H09M100 | 10m |
| 172 | 1200070526 | 884031P03M003 | 0.3m |
| 173 | 1200070527 | 884031P03M006 | 0.6m |
| 174 | 1200060056 | 884031P03M010 | 1m |
| 175 | 1200060057 | 884031P03M020 | 2m |
| 176 | 1200070529 | 884031P03M030 | 3m |
| 177 | 1200071187 | 884031P03M050 | 5m |
| 178 | 1200072012 | 884031P03M100 | 10m |
| 179 | 1300288001 | 885031D12M020 | 2m |
| 180 | 1200668658 | 885031E02M020 | 2m |
| 181 | 1200668610 | 885031E02M050 | 5m |
| 182 | 1200668660 | 885031E02M100 | 10m |
| 183 | 1200668339 | 885031E03M006 | 0.6m |
| 184 | 1200668189 | 885031E03M010 | 1m |
| 185 | 1200668278 | 885031E03M020 | 2m |
| 186 | 1200668340 | 885031E03M030 | 3m |
| 187 | 1200668279 | 885031E03M050 | 5m |
| 188 | 1200668653 | 885031E03M070 | 7m |
| 189 | 1200668348 | 885031E03M100 | 10m |
| 190 | 1200668761 | 885031E03M150 | 15m |

| Pos. | Part No. | Engineering No. | Cable Length |
|---|---|---|---|
| 191 | 1200669229 | 885031H09C250 | 25m |
| 192 | 1200668512 | 885031H09M006 | 0.6m |
| 193 | 1200668496 | 885031H09M010 | 1m |
| 194 | 1200668513 | 885031H09M020 | 2m |
| 195 | 1200668514 | 885031H09M030 | 3m |
| 196 | 1200668515 | 885031H09M050 | 5m |
| 197 | 1200668516 | 885031H09M100 | 10m |
| 198 | 1200073085 | 885031P03M006 | 0.6m |
| 199 | 1200668188 | 885031P03M010 | 1m |
| 200 | 1200072376 | 885031P03M0105 | 1m |
| 201 | 1200070917 | 885031P03M020 | 2m |
| 202 | 1200668091 | 885031P03M025 | 2.5m |
| 203 | 1200070919 | 885031P03M030 | 3m |
| 204 | 1200668273 | 885031P03M050 | 5m |
| 205 | 1200073086 | 885031P03M100 | 10m |
| 206 | 1200070434 | 884021E03M020 | 2m |
| 207 | 1200072575 | 888031P02M030 | 3m |
| 208 | 1200072708 | 888031P02M060 | 6m |
| 209 | 1200658319 | 888031H08M050 | 5m |
| 210 | 1200661620 | 888031P02M020 | 2m |
| 211 | 1200661626 | 888031P02M010 | 1m |
| 212 | 1200668673 | 888031E02M0041 | 0.4m |
| 213 | 1200668849 | 888031P02M150 | 15m |
| 214 | 1200656208 | 888031H08C250 | 2.5m |
| 215 | 1200656209 | 888031H08M005 | 0.5m |
| 216 | 1200656210 | 888031H08M008 | 0.8m |
| 217 | 1200656211 | 888031H08M012 | 1.2m |
| 218 | 1200656212 | 888031H08M015 | 1.5m |
| 219 | 1200070057 | 883021E03M006 | 0.6m |
| 220 | 1200070058 | 883021E03M020 | 2m |
| 221 | 1200070439 | 884021P03M006 | 0.6m |
| 222 | 1200070440 | 884021P03M010 | 1m |
| 223 | 1200070441 | 884021P03M020 | 2m |
| 224 | 1200070442 | 884021P03M030 | 3m |
| 225 | 1200070870 | 883021P03M050 | 5m |
| 226 | 1200072191 | 883021E03M030 | 3m |
| 227 | 1200072198 | 883021E03M050 | 5m |
| 228 | 1200665038 | 884021E03M050 | 5m |
| 229 | 1200668061 | 884021E03M006 | 0.6m |
| 230 | 1200668219 | 884021E03M030 | 3m |
| 231 | 1200668673 | 888031E02M0041 | 0.4m |
| 232 | 1200669541 | 884031P03M015 | 1.5m |
| 233 | 1200669885 | 884031E03M004 | 0.4m |
| 234 | 1200669886 | 884031E03M005 | 0.5m |
| 235 | 1200669887 | 884031E03M013 | 1.3m |
| 236 | 1200669888 | 884031E03M080 | 8m |
| 237 | | | |
| 238 | | | |

| DOCUMENT STATUS | P1 | RELEASE DATE | 2021/11/10 13:49:49 |
|---|---|---|---|

FORMAT: master_tpl_mod-A3
REVISION: J
DATE: 2020/01/16

THIS DRAWING CONTAINS INFORMATION THAT IS PROPRIETARY TO MOLEX ELECTRONIC TECHNOLOGIES, LLC AND SHOULD NOT BE USED WITHOUT WRITTEN PERMISSION

FUNCTIONAL SYMBOLS
FA = 0
FC = 0
FD = 0

DIVISIONAL SYMBOLS

| DIMENSION UNITS | SCALE |
|---|---|
| mm | 1:1 |

GENERAL TOLERANCES (UNLESS SPECIFIED)

| | |
|---|---|
| ANGULAR TOL | ± 1.0 ° |
| 4 PLACES | ± |
| 3 PLACES | ± |
| 2 PLACES | ± 0.05 |
| 1 PLACE | ± 0.3 |
| 0 PLACES | ± 0.5 |

DRAFT WHERE APPLICABLE MUST REMAIN WITHIN DIMENSIONS

CURRENT REV DESC:

EC NO: 684766
DRWN: SSM 2021/11/03
CHK'D: RSILLER 2021/11/10
APPR: RSILLER 2021/11/10

INITIAL REVISION:
DRWN: JMARSZALEK 2016/10/06
APPR: RSILLER 2016/12/08

molex

CSE M12 XP AC FE RA MA STR XM DE

PRODUCT CUSTOMER DRAWING

| DOCUMENT NUMBER | DOC TYPE | DOC PART | REVISION |
|---|---|---|---|
| 1200660973 | PSD | 000 | A9 |

| THIRD ANGLE PROJECTION | DRAWING | SERIES | MATERIAL NUMBER | CUSTOMER | SHEET NUMBER |
|---|---|---|---|---|---|
| | A3-SIZE | 120066 | SEE PART LIST | GENERAL MARKET | 4 OF 4 |