MALE PLUG M12 STRAIGHT

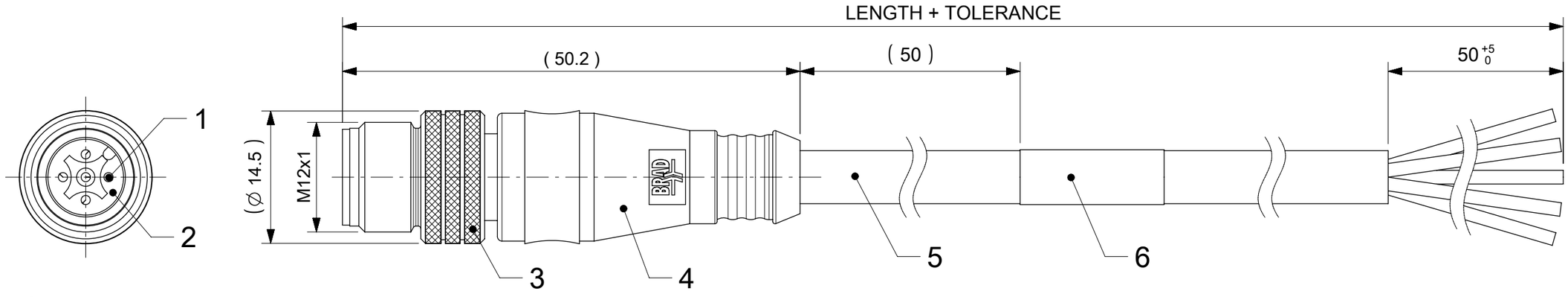

NOTES:

RATED VOLTAGE: 3, 4 contacts 250V
5 contacts 60V
8 contacts 30V

RATED CURRENT: 3, 4, 5 contacts 4A
8 contacts 2A

PROTECTION CLASS: IP 67

TEMPERATURE: -25°C / +85°C

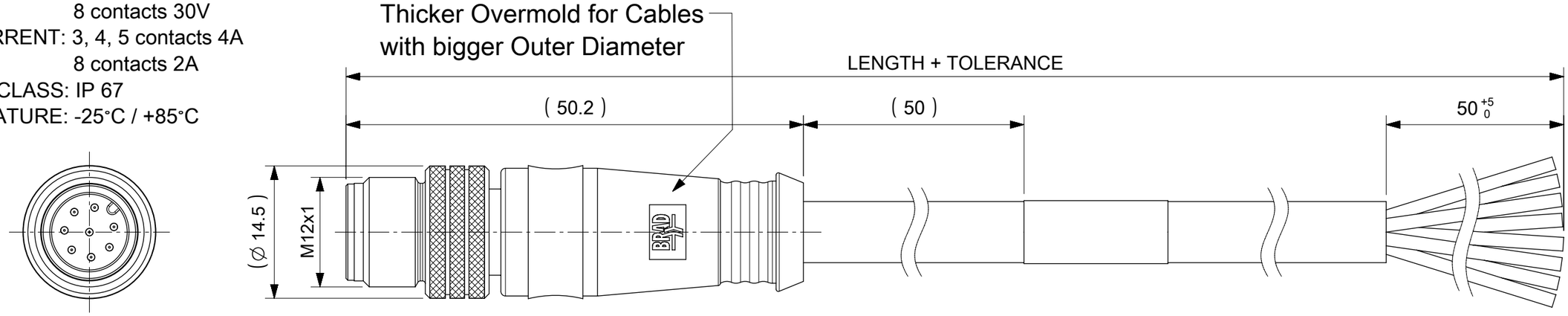

CONTACTS POSITION FRONT VIEW:

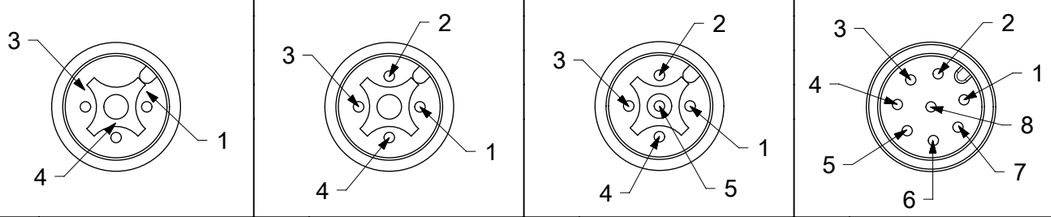

3 CONTACTS		4 CONTACTS		5 CONTACTS		8 CONTACTS	
PIN	WIRE	PIN	WIRE	PIN	WIRE	PIN	WIRE
1	BROWN	1	BROWN	1	BROWN	1	WHITE
2	---	2	WHITE	2	WHITE	2	BROWN
3	BLUE	3	BLUE	3	BLUE	3	GREEN
4	BLACK	4	BLACK	4	BLACK	4	YELLOW
5	---	5	---	5	GREY OR GREEN/YELLOW	5	GREY
						6	PINK
						7	BLUE
						8	RED

CODING REQUIRED TO IEC 61076-2-101

FOR OPTIONS SEE - NUMERICAL CODE - ON SHEET 2

ITEM	QTY.	DESCRIPTION	MATERIAL	FINISH
7	SEE MATRIX	D CARRIER	PVC	TRANSPARENT
6	1	LABEL YELLOW	VINYL	---
5	-	CABLE	SEE SHEET 2	---
4	-	OVERMOLDING BLACK	TPU	---
3	1	COUPLING NUT MALE	BRASS	NICKEL
2	1	INSERT MALE BLACK	PUR	---
1	3 / 4 / 5 / 8	CONTACT M12 MALE	BRASS	SELECTIVE Au OVER Ni

THIS DRAWING CONTAINS INFORMATION THAT IS PROPRIETARY TO MOLEX ELECTRONIC TECHNOLOGIES, LLC AND SHOULD NOT BE USED WITHOUT WRITTEN PERMISSION

FUNCTIONAL SYMBOLS: FA = 0, FC = 0, FF = 0

DIVISIONAL SYMBOLS

DIMENSION UNITS: mm | SCALE: 2:1

GENERAL TOLERANCES (UNLESS SPECIFIED)

ANGULAR TOL	± 1.0 °
4 PLACES	±
3 PLACES	±
2 PLACES	± 0.05
1 PLACE	± 0.3
0 PLACES	± 0.5

DRAFT WHERE APPLICABLE MUST REMAIN WITHIN DIMENSIONS

CURRENT REV DESC:

EC NO: 703046
DRWN: APAWLAK01 2022/04/12
CHK'D: RSILLER 2022/04/14
APPR: RSILLER 2022/04/14

INITIAL REVISION:
DRWN: JMARSZALEK 2016/01/12
APPR: RSILLER 2016/04/08

THIRD ANGLE PROJECTION | DRAWING: A3-SIZE | SERIES: 120065

molex

CSE M12 XP AC MA STR XM SE UNSH

PRODUCT CUSTOMER DRAWING

DOCUMENT NUMBER	DOC TYPE	DOC PART	REVISION
1200659185	PSD	000	A10

MATERIAL NUMBER	CUSTOMER	SHEET NUMBER
SEE TABLE	GENERAL MARKET	1 OF 4

DOCUMENT STATUS	P1	RELEASE DATE	2022/04/14 06:15:31

FORMAT: master-tb-prod-A3
REVISION: J1
DATE: 2021/05/01

ENGINEERING NO. - NUMERICAL CODE (Available parts see PART LIST table. Others on request).

8	0	X	0	0	6	X	X	X	X	X	X	X	X

OPTIONS

- 80=M12x1 Single ended
- Contacts: 3=3 Contacts, 4=4 Contacts, 5=5 Contacts, 8=8 Contacts
- Heads style: 006=Plug Male Straight
- Cable type: See Table
- Units: M=Meter
- Length Examples: 005=0.5 unit, 010=1 unit, 100=10 units
- Overmold color: Blank (Standard)=Black; A=Grey / G=Black / Y=Yellow; For Cable A09=Yellow
- Coupling Nut: Blank (Standard) & 3=Knurled Brass Ni Plated; 1 or 8=Hexagonal Stainless steel; 5=Knurled Derlin; 7=Knurled Brass Ni Plated, Teflon Coated; Blank=7 for cables I20, I26, K03, K05, P82, S26; 9=Knurled / Hexagonal Brass Ni Plated
- H= 2 pcs. of I/D Carrier PVC Transparent

COUPLING NUTS

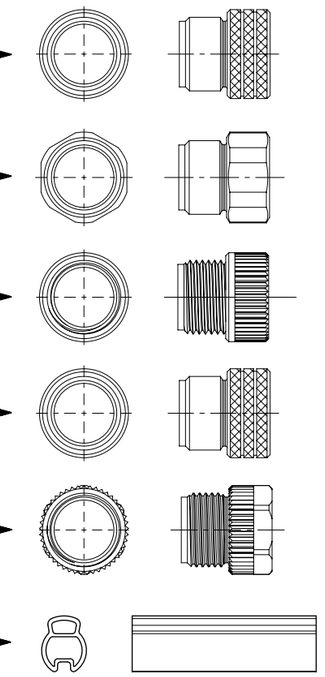

CABLE INFORMATION (for more information see Cable Data Sheet).

CABLE TYPE	NO. OF WIRES	CROSS SECTION	CABLE JACKET	UL	CSA	STATIC: TEMP. / BENDING RADIUS	DYNAMIC: TEMP. / BENDING RADIUS	DRAG CHAIN	SHIELD
E02	3 / 4 / 5 / 8	0.25mm²	PVC BLACK	UL 2464/1729	C22.2 I/II A/B 80°C/300V	-30°C to +80°C, 10xO.D.	-10°C to +80°C, 15xO.D.	-	-
E03	3 / 4 / 5	0.34mm²	PVC BLACK	UL 2464/1729	C22.2 I/II A/B 80°C/300V	-30°C to +80°C, 10xO.D.	-10°C to +80°C, 15xO.D.	-	-
H08	3 / 4 / 5 / 8	0.25mm²	PUR BLACK LS0H	UL 21198/10493	C22.2 I/II A/B 80°C/300V	-40°C to +80°C, 5xO.D.	-25°C to +80°C, 10xO.D.	2 000 000 cycles at 20°C, Temp. range +5°C to +60°C	-
H09	3 / 4 / 5	0.34mm²	PUR BLACK LS0H	UL 21198/10493	C22.2 I/II A/B 80°C/300V	-40°C to +80°C, 5xO.D.	-25°C to +80°C, 10xO.D.	2 000 000 cycles at 20°C, Temp. range +5°C to +60°C	-
P02	3 / 4 / 5 / 8	0.25mm²	PUR / PVC BLACK	-	-	-30°C to +80°C, 7xO.D.	-5°C to +80°C, 15xO.D.	-	-
P03	3 / 4 / 5	0.34mm²	PUR / PVC BLACK	-	-	-30°C to +80°C, 7xO.D.	-5°C to +80°C, 15xO.D.	-	-
A09	3	0.34mm²	PVC YELLOW	-	-	-	-	-	-
K03	5	0.82mm²	TPE YELLOW	-	-	-	-	-	-
K05	4	0.38mm²	TPE YELLOW	-	-	-	-	-	-

CABLE LENGTH TOLERANCES

OVER	UP TO AND INCLUDING	TOLERANCES
0	305mm	+19mm
305mm	915mm	+45mm
915mm	1830mm	+56mm
1830mm	3660mm	+89mm
3660mm	7320mm	+165mm
7320mm	14640mm	+317mm
14640mm	30500mm	+610mm
30500mm	>	+2% of finished length

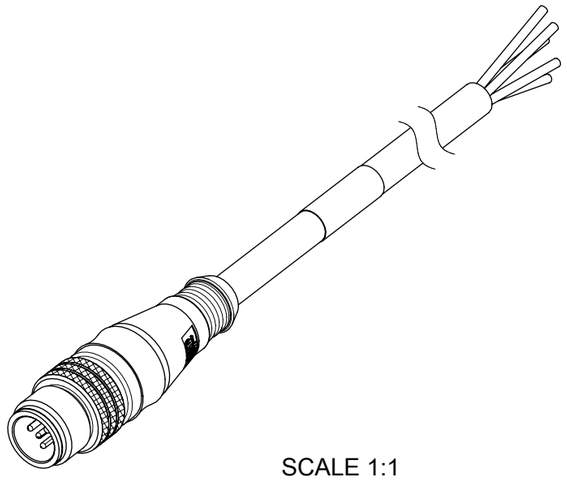

SCALE 1:1

THIS DRAWING CONTAINS INFORMATION THAT IS PROPRIETARY TO MOLEX ELECTRONIC TECHNOLOGIES, LLC AND SHOULD NOT BE USED WITHOUT WRITTEN PERMISSION

FUNCTIONAL SYMBOLS: FA= 0; FC= 0; FP= 0

DIVISIONAL SYMBOLS

DIMENSION UNITS: mm — SCALE: 1:1

GENERAL TOLERANCES (UNLESS SPECIFIED)

ANGULAR TOL	± 1.0 °
4 PLACES	±
3 PLACES	±
2 PLACES	± 0.05
1 PLACE	± 0.3
0 PLACES	± 0.5

DRAFT WHERE APPLICABLE MUST REMAIN WITHIN DIMENSIONS

CURRENT REV DESC:

EC NO: 703046
DRWN: APAWLAK01 2022/04/12
CHK'D: RSILLER 2022/04/14
APPR: RSILLER 2022/04/14

INITIAL REVISION:
DRWN: JMARSZALEK 2016/01/12
APPR: RSILLER 2016/04/08

THIRD ANGLE PROJECTION | DRAWING: A3-SIZE | SERIES: 120065

molex

CSE M12 XP AC MA STR XM SE UNSH

PRODUCT CUSTOMER DRAWING

DOCUMENT NUMBER	DOC TYPE	DOC PART	REVISION
1200659185	PSD	000	A10

MATERIAL NUMBER	CUSTOMER	SHEET NUMBER
SEE TABLE	GENERAL MARKET	2 OF 4

DOCUMENT STATUS	P1	RELEASE DATE	2022/04/14 06:15:31

FORMAT: master-tb-prod-A3
REVISION: J1
DATE: 2021/05/01

PART LIST

No.	Part No.	Engineering No.	Cable Length
1	1200060046	804006E03M120	12m
2	1200060047	804006P03M050	5m
3	1200060240	803006E03M020	2m
4	1200060241	803006E03M050	5m
5	1200060242	803006E03M100	10m
6	1200060256	803006P03M002	0.2m
7	1200060257	803006P03M020	2m
8	1200060260	803006P03M030	3m
9	1200060261	803006P03M050	5m
10	1200060558	804006E03M006	0.6m
11	1200060559	804006E03M010	1m
12	1200060560	804006E03M020	2m
13	1200060561	804006E03M030	3m
14	1200060562	804006E03M050	5m
15	1200060563	804006E03M100	10m
16	1200060570	804006P03M020	2m
17	1200060571	804006P03M030	3m
18	1200060572	804006P03M100	10m
19	1200060667	805006E03M020	2m
20	1200060668	805006E03M030	3m
21	1200060680	805006P03M020	2m
22	1200060682	805006P03M050	5m
23	1200061345	805006E03M050	5m
24	1200061611	803006E03M150	15m
25	1200061633	804006P03M010	1m
26	1200061853	803006P03M010	1m
27	1200061855	804006P03M006	0.6m
28	1200062017	803006E03M030	3m
29	1200062082	805006P03M060	6m
30	1200062122	804006E03M0201	* 2m
31	1200062209	805006E03M100	10m
32	1200062351	803006E03M0505	5m
33	1200062352	803006E03M1005	10m
34	1200062426	804006E03M200	20m
35	1200062560	808006P02M005	0.5m
36	1200062596	805006E03M003	0.3m
37	1200062631	805006P03M120	12m
38	1200062799	805006E03M010	1m
39	1200062830	804006E03M0205	2m
40	1200062877	804006E03M0505	5m
41	1200062920	804006E03M1005	10m
42	1200063018	803006P03M0303	3m
43	1200063077	804006E02M005	0.5m
44	1200063470	804006E03M010H	1m
45	1200063472	804006P03M200	20m
46	1200063731	805006P03M0065	0.6m
47	1200063732	804006E03M0501	5m
48	1200063733	804006E03M1001	* 10m
49	1200063856	804006E03M1501	* 15m
50	1200063941	804006P03M0401	4m
51	1200063953	805006E03M035	3.5m
52	1200063969	804006E03M2001	** 20m
53	1200064160	803006P03M005	0.5m
54	1200064231	804006E03M2501	* 25m
55	1200064240	804006P03M070	7m
56	1200064251	804006E03M003	0.3m
57	1200064252	804006E03M005	0.5m
58	1200064261	804006P03M011	1.1m
59	1200064347	804006P03M007	0.7m
60	1200064353	803006E03M003	0.3m
61	1200064393	804006P03M020G	2m
62	1200064464	803006P03M005G	0.5m
63	1200065002	805006P03M0201	2m
64	1200650964	808006P02M020	2m
65	1200650967	808006P02M040	4m
66	1200650968	808006P02M050	5m
67	1200650969	808006P02M100	10m
68	1200650970	808006P02M200	20m
69	1200651763	808006P02M030	3m
70	1200652141	804006P03M040	4m
71	1200652157	805006P03M040	4m
72	1200652158	805006P03M100	10m
73	1200655011	805006P03M005	0.5m
74	1200655051	805006E03M006	0.6m
75	1200658016	808006P02M060	6m
76	1200658055	803006P03M003	0.3m
77	1200658057	803006P03M035	3.5m
78	1200658076	804006P03M0505	5m
79	1200658092	805006P03M010	1m
80	1200658109	808006P02M003	0.3m
81	1200658110	808006P02M150	15m
82	1200658181	808006P02M010	1m
83	1200658209	805006E03M0061	* 0.6m
84	1200658217	805006P03M090	9m
85	1200658223	808006E02M003	0.3m
86	1200658226	808006E02M0038	0.3m
87	1200658247	803006H09M100	10m
88	1200658248	803006H09M050	5m
89	1200658263	808006H08M100	10m
90	1200658463	804006P03M150	15m
91	1200658478	808006E02M040	4m
92	1200658500	805006E03M1001	10m
93	1200658518	804006E03M0201H	2m
94	1200658519	804006E03M0501H	5m
95	1200658526	803006E03M005	0.5m
96	1200658542	804006E03M070	7m
97	1200658546	808006E02M050	5m
98	1200658552	808006E02M0031	0.3m
99	1200658565	803006E03M010	1m
100	1200658566	803006E03M040	4m
101	1200658571	804006E03M040	4m
102	1200658576	808006E02M010	1m
103	1200658577	808006E02M020	2m
104	1200658578	808006E02M030	3m
105	1200658579	808006E02M100	10m
106	1200658612	803006P03M040	4m
107	1200658613	803006P03M100	10m
108	1200658653	803006H09M010	1m
109	1200658654	803006H09M015	1.5m
110	1200658655	803006H09M020	2m
111	1200658656	803006H09M030	3m
112	1200658657	803006H09M040	4m
113	1200658658	808006H08M010	1m
114	1200658659	808006H08M015	1.5m
115	1200658660	808006H08M020	2m
116	1200658661	808006H08M030	3m
117	1200658662	808006H08M040	4m
118	1200658663	808006H08M050	5m
119	1200658727	804006H09M010	1m
120	1200658728	804006H09M015	1.5m
121	1200658729	804006H09M020	2m
122	1200658730	804006H09M030	3m
123	1200658731	804006H09M040	4m
124	1200658732	804006H09M050	5m
125	1200658733	804006H09M100	10m
126	1200658741	805006H09M010	1m
127	1200658742	805006H09M015	1.5m
128	1200658743	805006H09M020	2m
129	1200658744	805006H09M030	3m
130	1200658745	805006H09M040	4m
131	1200658746	805006H09M050	5m
132	1200658747	805006H09M100	10m
133	1200658784	804006E03M0101H	1m
134	1200658785	804006E03M1001H	10m
135	1200658814	808006H08M025	2.5m
136	1200658815	808006E02M003G	0.3m
137	1200658859	808006E02M0061G	0.6m
138	1200658876	804006E03M150	15m
139	1200658881	803006E03M050G	5m
140	1200658888	804006E03M020H	2m

NOTES:
* - Part No. with Yellow PVC overmolding
** - Part No. with Black PVC overmolding

THIS DRAWING CONTAINS INFORMATION THAT IS PROPRIETARY TO MOLEX ELECTRONIC TECHNOLOGIES, LLC AND SHOULD NOT BE USED WITHOUT WRITTEN PERMISSION

FUNCTIONAL SYMBOLS: FA = 0; FC = 0; FD = 0
DIVISIONAL SYMBOLS

DIMENSION UNITS	SCALE
mm	1:1

GENERAL TOLERANCES (UNLESS SPECIFIED)

ANGULAR TOL	± 1.0 °
4 PLACES	±
3 PLACES	±
2 PLACES	± 0.05
1 PLACE	± 0.3
0 PLACES	± 0.5

DRAFT WHERE APPLICABLE MUST REMAIN WITHIN DIMENSIONS

CURRENT REV DESC:

EC NO: 703046
DRWN: APAWLAK01 2022/04/12
CHK'D: RSILLER 2022/04/14
APPR: RSILLER 2022/04/14

INITIAL REVISION:
DRWN: JMARSZALEK 2016/01/12
APPR: RSILLER 2016/04/08

molex

CSE M12 XP AC MA STR XM SE UNSH

PRODUCT CUSTOMER DRAWING

DOCUMENT NUMBER	DOC TYPE	DOC PART	REVISION
1200659185	PSD	000	A10

THIRD ANGLE PROJECTION	DRAWING	SERIES	MATERIAL NUMBER	CUSTOMER	SHEET NUMBER
	A3-SIZE	120065	SEE PART LIST	GENERAL MARKET	3 OF 4

DOCUMENT STATUS	P1	RELEASE DATE	2022/04/14 06:15:31

FORMAT: master-lb-prod-A3
REVISION: J1
DATE: 2021/05/01

PART LIST

No.	Part No.	Engineering No.	Cable Length
141	1200658890	804006H09M003	0.3m
142	1200658892	803006H09M003	0.3m
143	1200658893	804006E03M050H	5m
144	1200658895	804006H09M200	20m
145	1200658897	805006E03M200	20m
146	1200658913	805006P03M030	3m
147	1200658918	808006E02M005H	0.5m
148	1200658919	808006E02M010H	1m
149	1200659034	804006E02M050	5m
150	1200659036	804006E02M070	7m
151	1200659037	804006E02M100	10m
152	1200659041	808006E02M005	0.5m
153	1200659080	804006E03M020Y	2m
154	1200659104	803006E03M010Y	1m
155	1200659109	804006E02M020	2m
156	1200659110	808006E02M0501	* 5m
157	1200659111	803006E02M050	5m
158	1200659141	805006H09M200	20m
159	1200659142	805006H09M300	30m
160	1200659145	805006E03M300	30m
161	1200659149	805006H09M005	0.5m
162	1200659154	804006P03M100Y	10m
163	1200659178	804006P03M075	7.5m
164	1200659179	804006P03M015	1.5m
165	1200659185	805006E03M080	8m
166	1200659186	804006E03M060	6m
167	1200659190	804006P03M250	25m
168	1200659191	804006P03M300	30m
169	1200659192	804006P03M350	35m
170	1200659193	804006P03M400	40m
171	1200659194	804006E03M250	25m
172	1200659195	804006E03M300	30m
173	1200659196	804006E03M350	35m
174	1200659197	804006E03M400	40m
175	1200659198	804006E03M450	45m

No.	Part No.	Engineering No.	Cable Length
176	1200659224	805006P03M200	20m
177	1200659225	805006P03M300	30m
178	1200659254	804006E03M500	50m
179	1200659281	805006P03M150	15m
180	1200659284	808006E02M150	15m
181	1200659285	805006E03M150	15m
182	1200659316	805006P03M005H	0.5m
183	1200659317	805006P03M007H	0.7m
184	1200659318	805006P03M010H	1m
185	1200659319	805006P03M020H	2m
186	1200659320	805006P03M050H	5m
187	1200659321	805006P03M100H	10m
188	1200659322	805006P03M150H	15m
189	1200659323	805006P03M200H	20m
190	1200659324	805006P03M300H	30m
191	1200659325	805006P03M350H	35m
192	1200659367	805006E03M015	1.5m
193	1200659454	805006E03M045	4.5m
194	1200659455	805006E03M075	7.5m
195	1200659513	805006E03M030H	3m
196	1200659514	805006E03M045H	4.5m
197	1200659515	805006E03M075H	7.5m
198	1200659550	804006E03M120H	12m
199	1200659551	805006E03M010H	1m
200	1200659557	804006P03M003	0.3m
201	1200659612	804006P03M080	8m
202	1200659692	803006E02M020	2m
203	1200659983	804006E02M075	7.5m
204	1200659991	804006E02M0705	7m
205	1200656021	804006H09M050H	5m
206	1200659539	808006E02M100	** 10m
207	1200656293	803006E03M080	8m
208	1200656294	803006E03M120	12m
209	1200656295	804006E03M080	8m
210	1200656297	808006H08M005	0.5m

No.	Part No.	Engineering No.	Cable Length
211	1200650843	803006A09M0208	* 2m
212	1200651374	805006K03M020	2m
213	1200652151	805006K03M050	5m
214	1200651129	804006K05M020	2m
215	1200651131	804006K05M050	5m
216	1200651133	804006K05M100	10m
217	1200657191	805006E03M005	0.5m
218	1200656974	805006H09M003	0.3m
219	1200657157	804006P03M002	0.2m
220	1200657158	804006P03M005	0.5m
221	1200657159	804006E03M015	1.5m
222	1200657263	805006H09M250	25m
223			
224			
225			
226			
227			
228			
229			
230			
231			
232			
233			
234			
235			
236			
237			
238			
239			
240			
241			
242			
243			
244			
245			

No.	Part No.	Engineering No.	Cable Length
246			
247			
248			
249			
250			
251			
252			
253			
254			
255			
256			
257			
258			
259			
260			
261			
262			
263			
264			
265			
266			
267			
268			
269			
270			
271			
272			
273			
274			
275			
276			
277			
278			
279			
280			

NOTES:
* - Part No. with Yellow PVC overmolding
** - Part No. with Black PVC overmolding

FUNCTIONAL SYMBOLS
FA = 0
FC = 0
FD = 0
DIVISIONAL SYMBOLS

DIMENSION UNITS: mm | SCALE: 1:1

GENERAL TOLERANCES (UNLESS SPECIFIED)

ANGULAR TOL	±	1.0 °
4 PLACES	±	
3 PLACES	±	
2 PLACES	±	0.05
1 PLACE	±	0.3
0 PLACES	±	0.5

DRAFT WHERE APPLICABLE MUST REMAIN WITHIN DIMENSIONS

THIS DRAWING CONTAINS INFORMATION THAT IS PROPRIETARY TO MOLEX ELECTRONIC TECHNOLOGIES, LLC AND SHOULD NOT BE USED WITHOUT WRITTEN PERMISSION

CURRENT REV DESC:

EC NO: 703046
DRWN: APAWLAK01 2022/04/12
CHK'D: RSILLER 2022/04/14
APPR: RSILLER 2022/04/14

INITIAL REVISION:
DRWN: JMARSZALEK 2016/01/12
APPR: RSILLER 2016/04/08

molex

CSE M12 XP AC MA STR XM SE UNSH

PRODUCT CUSTOMER DRAWING

DOCUMENT NUMBER	DOC TYPE	DOC PART	REVISION
1200659185	PSD	000	A10

THIRD ANGLE PROJECTION	DRAWING	SERIES	MATERIAL NUMBER	CUSTOMER	SHEET NUMBER
	A3-SIZE	120065	SEE PART LIST	GENERAL MARKET	4 OF 4

DOCUMENT STATUS	P1	RELEASE DATE	2022/04/14 06:15:31

FORMAT: master-lb-prod-A3
REVISION: J1
DATE: 2021/05/01