MALE PLUG M12 90° ANGLED

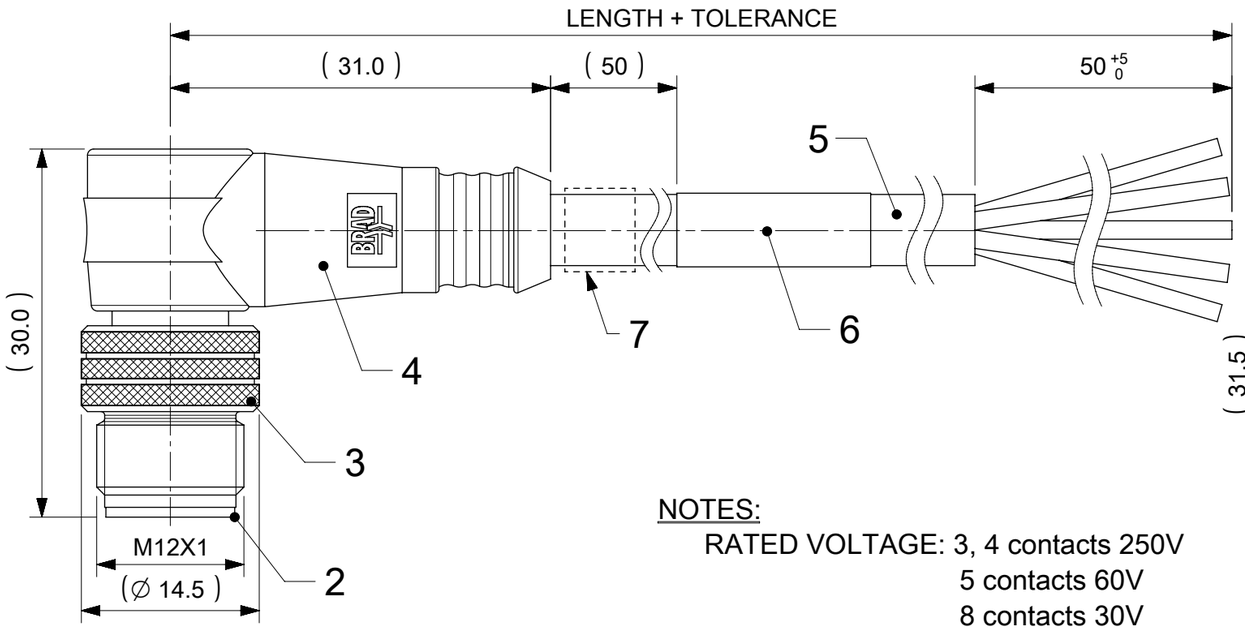

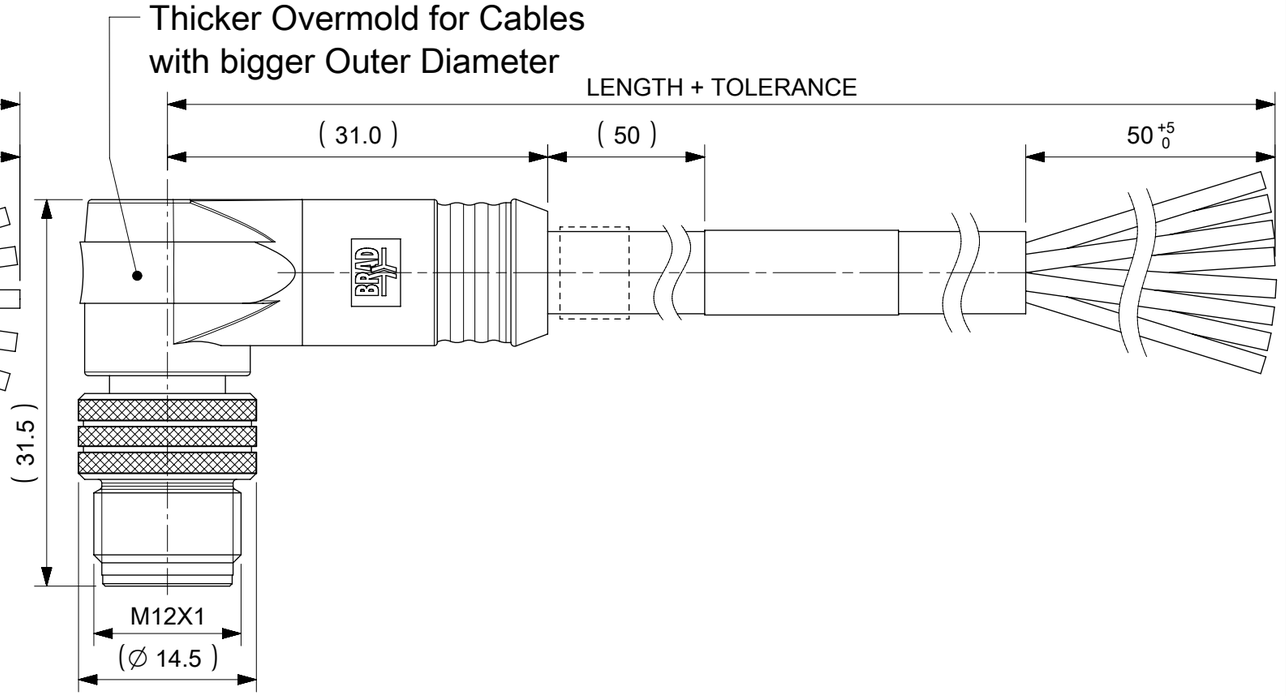

NOTES:

RATED VOLTAGE: 3, 4 contacts 250V
5 contacts 60V
8 contacts 30V

RATED CURRENT: 3, 4, 5 contacts 4A
8 contacts 2A

PROTECTION CLASS: IP 67

TEMPERATURE : SEE CABLE INFORMATION ON SHEET2

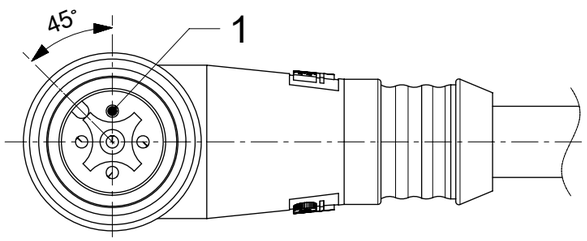

VIEW FROM THE FRONT SIDE

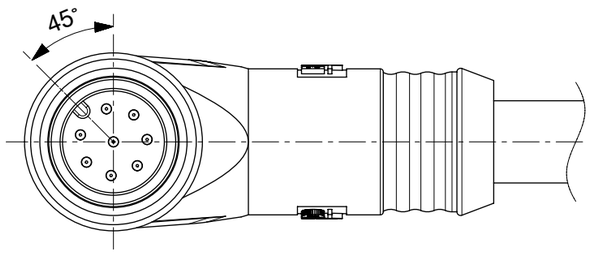

VIEW FROM THE FRONT SIDE

CONTACTS POSITION FRONT VIEW:

3 CONTACTS		4 CONTACTS		5 CONTACTS		8 CONTACTS	
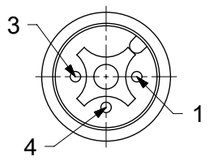		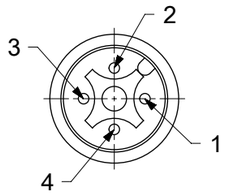		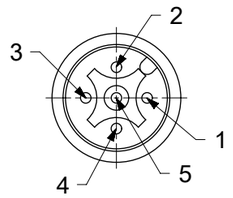		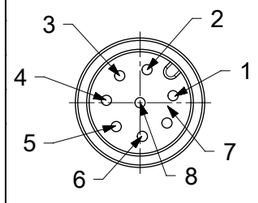	
PIN	WIRE	PIN	WIRE	PIN	WIRE	PIN	WIRE
1	BROWN	1	BROWN	1	BROWN	1	WHITE
2	---	2	WHITE	2	WHITE	2	BROWN
3	BLUE	3	BLUE	3	BLUE	3	GREEN
4	BLACK	4	BLACK	4	BLACK	4	YELLOW
5	---	5	---	5	GREY	5	GREY
						6	PINK
						7	BLUE
						8	RED
CODING REQUIRED TO IEC 61076-2-101							

FOR OPTIONS SEE - NUMERICAL CODE - ON SHEET 2

ITEM	QTY.	DESCRIPTION	MATERIAL	FINISH
7	0 OR 2	I/D CARRIER (SEE MATRIX)	PVC	TRANSPARENT
6	1	LABEL YELLOW	VINYL	---
5	-	CABLE	SEE SHEET 2	---
4	-	OVERMOULDING BLACK	TPU	---
3	1	COUPLING NUT MALE	BRASS	NICKEL
2	1	INSERT MALE BLACK	PUR	---
1	3 / 4 / 5 / 8	CONTACT M12 MALE	BRASS	SELECTIVE Au OVER Ni

THIS DRAWING CONTAINS INFORMATION THAT IS PROPRIETARY TO MOLEX ELECTRONIC TECHNOLOGIES, LLC AND SHOULD NOT BE USED WITHOUT WRITTEN PERMISSION

FUNCTIONAL SYMBOLS
FA = 0
FC = 0
FD = 0
DIVISIONAL SYMBOLS

DIMENSION UNITS: mm
SCALE: 2:1

GENERAL TOLERANCES (UNLESS SPECIFIED)

ANGULAR TOL	± 1.0 °
4 PLACES	±
3 PLACES	±
2 PLACES	± 0.05
1 PLACE	± 0.3
0 PLACES	± 0.5

DRAFT WHERE APPLICABLE MUST REMAIN WITHIN DIMENSIONS

CURRENT REV DESC: ADDED NEW PNS

EC NO: 695290
DRWN: MDHARMANTI 2021/12/01
CHK'D: RSILLER 2022/02/11
APPR: RSILLER 2022/02/11

INITIAL REVISION:
DRWN: JMARSZALEK 2016/01/14
APPR: RSILLER 2016/04/08

THIRD ANGLE PROJECTION | DRAWING: A3-SIZE | SERIES: 120065

molex

CSE M12 XP AC MA RA XM SE UNSH

PRODUCT CUSTOMER DRAWING

DOCUMENT NUMBER	DOC TYPE	DOC PART	REVISION
1200659138	PSD	000	A5

MATERIAL NUMBER	CUSTOMER	SHEET NUMBER
SEE SHEET 3	GENERAL MARKET	1 OF 3

DOCUMENT STATUS	P1	RELEASE DATE	2022/02/11 06:52:32

FORMAT: master-lb-prod-A3
REVISION: J1
DATE: 2021/05/01

ENGINEERING NO. - NUMERICAL CODE (Available parts see PART LIST table. Others on request).

OPTIONS

8	0	X	0	0	7	X	X	X	X	X	X	X	X

- 80=M12x1 Single ended
- Contacts: 3=3 Contacts, 4=4 Contacts, 5=5 Contacts, 8=8 Contacts
- Heads style: 007=Plug Male 90° Angled
- Cable type: See Table
- Units: M=Meter
- Length Examples: 005=0.5 unit, 010=1 unit, 100=10 units
- Overmold color: Blank (Standard)=Black; A=Grey / G=Black / Y=Yellow
- Coupling Nut: Blank (Standard) & 3=Knurled Brass Ni Plated; 1=Hexagonal Stainless steel; 5=Knurled Derlin; 7=Knurled Brass Ni Plated, Teflon Coated; 9=Knurled / Hexagonal Brass Ni Plated
- H= 2 pcs. of I/D Carrier PVC Transparent

COUPLING NUTS

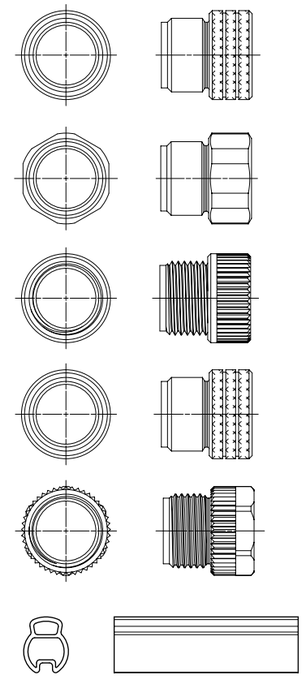

CABLE INFORMATION (for more information see Cable Data Sheet).

CABLE TYPE	NO. OF WIRES	CROSS SECTION	CABLE JACKET	UL	CSA	STATIC: TEMP. / BENDING RADIUS	DYNAMIC: TEMP. / BENDING RADIUS	DRAG CHAIN	SHIELD
E02	3 / 4 / 5 / 8	0.25mm²	PVC BLACK	UL 2464/1729	C22.2 I/II A/B 80°C/300V	-30°C to +80°C, 10xO.D.	-10°C to +80°C, 15xO.D.	-	-
E03	3 / 4 / 5	0.34mm²	PVC BLACK	UL 2464/1729	C22.2 I/II A/B 80°C/300V	-30°C to +80°C, 10xO.D.	-10°C to +80°C, 15xO.D.	-	-
H08	3 / 4 / 5 / 8	0.25mm²	PUR BLACK LS0H	UL 21198/10493	C22.2 I/II A/B 80°C/300V	-40°C to +80°C, 5xO.D.	-25°C to +80°C, 10xO.D.	2 000 000 cycles at 20°C, Temp. range +5°C to +60°C	-
H09	3 / 4 / 5	0.34mm²	PUR BLACK LS0H	UL 21198/10493	C22.2 I/II A/B 80°C/300V	-40°C to +80°C, 5xO.D.	-25°C to +80°C, 10xO.D.	2 000 000 cycles at 20°C, Temp. range +5°C to +60°C	-
P02	3 / 4 / 5 / 8	0.25mm²	PUR / PVC BLACK	-	-	-30°C to +80°C, 7xO.D.	-5°C to +80°C, 15xO.D.	-	-
P03	3 / 4 / 5	0.34mm²	PUR / PVC BLACK	-	-	-30°C to +80°C, 7xO.D.	-5°C to +80°C, 15xO.D.	-	-
E13	3	18AWG	PVC YELLOW	UL 2661/1731	I/II A/B 80°C/300V	-	-	-	-
E52	3 / 4 / 8	0.34mm²	PVC GREY	-	-	-30°C to +70°C	-5°C to +70°C	-	-
H69	4	0.20mm²	PUR GREY LS0H	-	-	-	-	-	-
I03	3 / 4 / 5	0.34mm²	PVC CEI GREY	-	-	-30°C to +70°C	-5°C to +70°C	-	-
K03	4 / 5	0.34mm²	TPE YELLOW	-	I/II A/B 90°C/300V	-40°C to +105°C	-	-	-
K05	3 / 4 / 5	0.34mm²	TPE YELLOW	UL ITC E195601 or PLC	I/II A/B 90°C/300V	-	-	-	-
P12	3 / 5	0.50mm²	PUR BLACK	-	-	-30°C to +90°C	-5°C to +90°C	-	-
P82	3 / 4 / 5	0.34mm²	PUR IRR ORANGE	-	-	-50°C to +105°C, 5xO.D.	-40°C to +105°C, 7.5xO.D.	-	-

CABLE LENGTH TOLERANCES

OVER	UP TO AND INCLUDING	TOLERANCES
0	305mm	+19mm
305mm	915mm	+45mm
915mm	1830mm	+56mm
1830mm	3660mm	+89mm
3660mm	7320mm	+165mm
7320mm	14640mm	+317mm
14640mm	30500mm	+610mm
30500mm	>	+2% of finished length

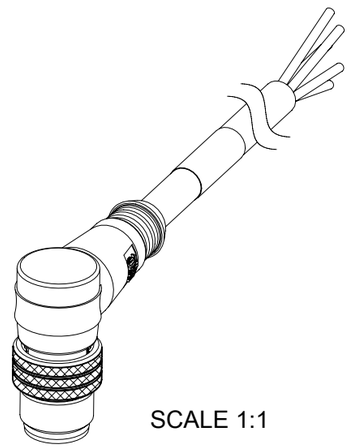

SCALE 1:1

THIS DRAWING CONTAINS INFORMATION THAT IS PROPRIETARY TO MOLEX ELECTRONIC TECHNOLOGIES, LLC AND SHOULD NOT BE USED WITHOUT WRITTEN PERMISSION

FUNCTIONAL SYMBOLS: FA = 0; FC = 0; FP = 0

DIVISIONAL SYMBOLS

DIMENSION UNITS: mm | SCALE: 1:1

GENERAL TOLERANCES (UNLESS SPECIFIED)

ANGULAR TOL	± 1.0 °
4 PLACES	±
3 PLACES	±
2 PLACES	± 0.05
1 PLACE	± 0.3
0 PLACES	± 0.5

DRAFT WHERE APPLICABLE MUST REMAIN WITHIN DIMENSIONS

CURRENT REV DESC: ADDED NEW PNS

EC NO: 695290
DRWN: MDHARMANTI 2021/12/01
CHK'D: RSILLER 2022/02/11
APPR: RSILLER 2022/02/11

INITIAL REVISION:
DRWN: JMARSZALEK 2016/01/14
APPR: RSILLER 2016/04/08

molex

CSE M12 XP AC MA RA XM SE UNSH

PRODUCT CUSTOMER DRAWING

DOCUMENT NUMBER	DOC TYPE	DOC PART	REVISION
1200659138	PSD	000	A5

THIRD ANGLE PROJECTION | DRAWING: A3-SIZE | SERIES: 120065

MATERIAL NUMBER	CUSTOMER	SHEET NUMBER
SEE SHEET 3	GENERAL MARKET	2 OF 3

DOCUMENT STATUS	P1	RELEASE DATE	2022/02/11 06:52:32

FORMAT: master-tb-prod-A3
REVISION: J1
DATE: 2021/05/01

PART LIST

No.	Part No.	Engineering No.	Cable Length
1	1200060273	803007E03M020	2m
2	1200060275	803007E03M050	5m
3	1200060288	803007P03M020	2m
4	1200060289	803007P03M030	3m
5	1200060582	804007E03M010	1m
6	1200060583	804007E03M030	3m
7	1200060584	804007E03M050	5m
8	1200060587	804007H69M020	2m
9	1200060589	804007I03M020	2m
10	1200060592	804007P03M020	2m
11	1200060593	804007P03M030	3m
12	1200060594	804007P03M050	5m
13	1200060595	804007P03M100	10m
14	1200060696	805007P03M015	1.5m
15	1200060697	805007P03M020	2m
16	1200060699	805007P03M040	4m
17	1200061764	804007P03M010	1m
18	1200061975	804007E03M020	2m
19	1200062055	803007P03M050	5m
20	1200062238	804007E03M100	10m
21	1200062498	805007E03M100	10m
22	1200062638	804007E03M006	0.6m
23	1200062680	804007E03M0101	1m
24	1200062681	804007E03M0201	2m
25	1200062682	804007E03M0501	5m
26	1200062929	805007E03M050	5m
27	1200063575	804007E03M1001	10m
28	1200063576	804007E03M1501	15m
29	1200063656	804007E03M2001	20m
30	1200063831	804007E52M100	10m
31	1200064175	804007E03M4001	40m
32	1200064178	804007P03M005	0.5m
33	1200064280	804007E03M200	20m
34	1200064294	804007P03M200	20m
35	1200064394	804007P03M020G	2m

No.	Part No.	Engineering No.	Cable Length
36	1200651688	804007K03M050	5m
37	1200651691	804007K05M020	2m
38	1200651693	804007K05M050	5m
39	1200651800	808007P02M020	2m
40	1200652026	804007K03M100	10m
41	1200652145	804007P03M040	4m
42	1200652149	805007P03M060	6m
43	1200652159	805007K03M020	2m
44	1200652161	805007K03M050	5m
45	1200655006	805007P03M100	10m
46	1200655015	804007P82M0507	5m
47	1200655016	804007P82M1007	10m
48	1200655017	804007P82M2007	20m
49	1200658005	804007P82M0107	1m
50	1200658096	805007E03M020	2m
51	1200658186	805007P03M050	5m
52	1200658229	803007E13M050	5m
53	1200658235	804007E03M2501	25m
54	1200658258	808007P02M050	5m
55	1200658259	808007P02M100	10m
56	1200658327	805007I03M015	1.5m
57	1200658506	803007E03M100	10m
58	1200658515	804007E03M0501H	5m
59	1200658516	804007E03M1001H	10m
60	1200658522	805007P12M020	2m
61	1200658567	803007E03M010	1m
62	1200658568	803007E03M030	3m
63	1200658569	803007E03M040	4m
64	1200658572	804007E03M040	4m
65	1200658596	803007I03M010	1m
66	1200658597	803007I03M040	4m
67	1200658598	803007I03M100	10m
68	1200658602	804007I03M010	1m
69	1200658603	804007I03M030	3m
70	1200658604	804007I03M040	4m

No.	Part No.	Engineering No.	Cable Length
71	1200658614	803007P03M040	4m
72	1200658615	803007P03M010	1m
73	1200658618	803007P03M100	10m
74	1200658720	803007H09M010	1m
75	1200658721	803007H09M015	1.5m
76	1200658722	803007H09M020	2m
77	1200658723	803007H09M030	3m
78	1200658724	803007H09M040	4m
79	1200658725	803007H09M050	5m
80	1200658726	803007H09M100	10m
81	1200658734	804007H09M010	1m
82	1200658735	804007H09M015	1.5m
83	1200658736	804007H09M020	2m
84	1200658737	804007H09M030	3m
85	1200658738	804007H09M040	4m
86	1200658739	804007H09M050	5m
87	1200658740	804007H09M100	10m
88	1200658748	805007H09M010	1m
89	1200658749	805007H09M015	1.5m
90	1200658750	805007H09M020	2m
91	1200658751	805007H09M030	3m
92	1200658752	805007H09M040	4m
93	1200658753	805007H09M050	5m
94	1200658754	805007H09M100	10m
95	1200658757	808007H08M020	2m
96	1200659138	805007E03M010	1m
97	1200659143	805007H09M200	20m
98	1200659146	805007E03M200	20m
99	1200659151	805007P03M150	15m
100	1200659204	805007P12M050	5m
101	1200659230	805007P03M010	1m
102	1200659231	805007P03M200	20m
103	1200659247	805007E03M020Y	2m
104	1200659249	805007P03M050Y	5m
105	1200659540	805007E03M030	3m

No.	Part No.	Engineering No.	Cable Length
106	1200657164	804007P03M003	0.3m
107	1200657165	804007P03M006	0.6m
108	1200657166	804007P03M015	1.5m
109	1200657167	804007P03M150	15m
110	1200657168	804007P03M500	50m
111	1200657169	804007E03M003	0.3m
112	1200657170	804007E03M015	1.5m
113	1200657171	804007E03M060	6m
114	1200657172	804007E03M080	8m
115	1200657173	804007E03M120	12m
116	1200657174	804007E03M150	15m
117	1200657175	804007E03M300	30m
118			
119			
120			
121			
122			
123			
124			
125			
126			
127			
128			
129			
130			
131			
132			
133			
134			
135			
136			
137			
138			
139			
140			

THIS DRAWING CONTAINS INFORMATION THAT IS PROPRIETARY TO MOLEX ELECTRONIC TECHNOLOGIES, LLC AND SHOULD NOT BE USED WITHOUT WRITTEN PERMISSION

FUNCTIONAL SYMBOLS
FA = 0
FC = 0
FD = 0
DIVISIONAL SYMBOLS

DIMENSION UNITS	SCALE
mm	1:1

GENERAL TOLERANCES (UNLESS SPECIFIED)

ANGULAR TOL	± 1.0 °
4 PLACES	±
3 PLACES	±
2 PLACES	± 0.05
1 PLACE	± 0.3
0 PLACES	± 0.5

DRAFT WHERE APPLICABLE MUST REMAIN WITHIN DIMENSIONS

CURRENT REV DESC: ADDED NEW PNS

EC NO: 695290
DRWN: MDHARMANTI 2021/12/01
CHK'D: RSILLER 2022/02/11
APPR: RSILLER 2022/02/11

INITIAL REVISION:
DRWN: JMARSZALEK 2016/01/14
APPR: RSILLER 2016/04/08

molex

CSE M12 XP AC MA RA XM SE UNSH

PRODUCT CUSTOMER DRAWING

DOCUMENT NUMBER	DOC TYPE	DOC PART	REVISION
1200659138	PSD	000	A5

THIRD ANGLE PROJECTION	DRAWING	SERIES	MATERIAL NUMBER	CUSTOMER	SHEET NUMBER
	A3-SIZE	120065	SEE PART LIST	GENERAL MARKET	3 OF 3

DOCUMENT STATUS	P1	RELEASE DATE	2022/02/11 06:52:32

FORMAT: master-lb-prod-A3
REVISION: J1
DATE: 2021/05/01