FEMALE PLUG M12 90° ANGLED

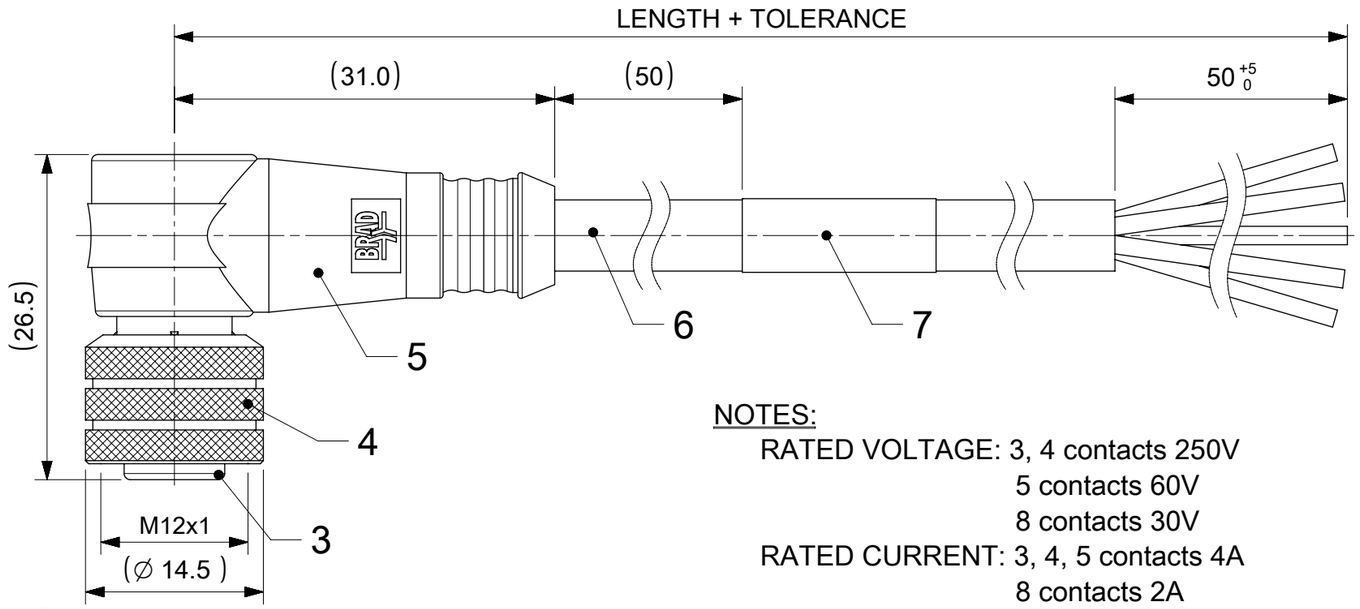

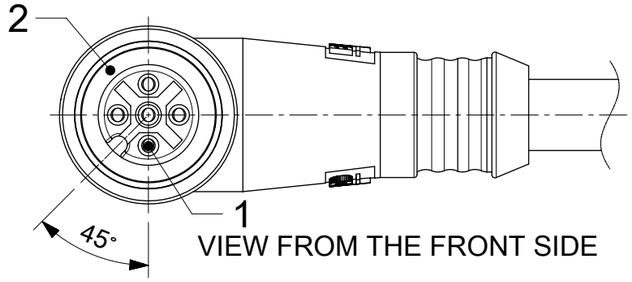

VIEW FROM THE FRONT SIDE

NOTES:

RATED VOLTAGE: 3, 4 contacts 250V
5 contacts 60V
8 contacts 30V

RATED CURRENT: 3, 4, 5 contacts 4A
8 contacts 2A

PROTECTION CLASS: IP 67

TEMPERATURE: CABLE INFORMATION ON SHEET 2

Thicker Overmold for Cables with bigger Outer Diameter

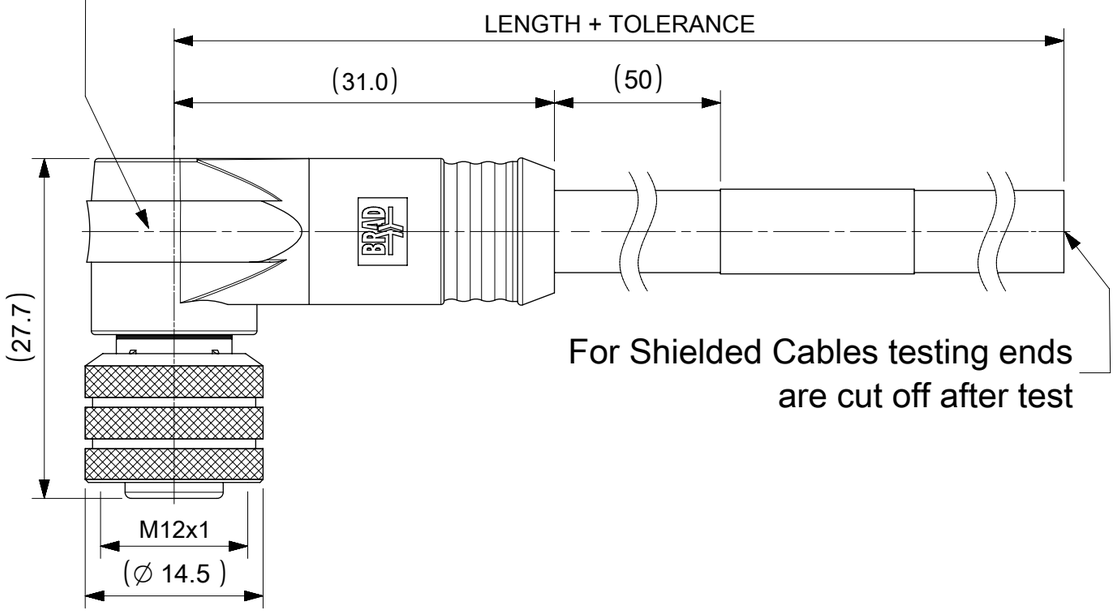

For Shielded Cables testing ends are cut off after test

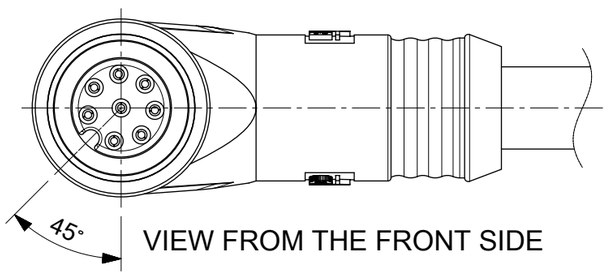

VIEW FROM THE FRONT SIDE

CONTACTS POSITION FRONT VIEW:

3 CONTACTS		4 CONTACTS		5 CONTACTS		8 CONTACTS	
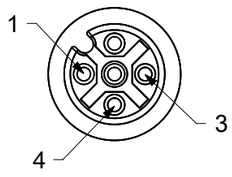		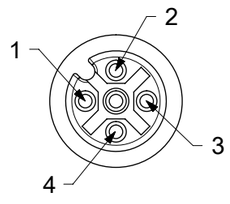		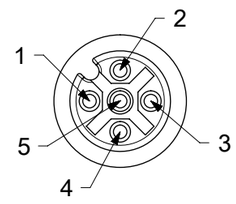		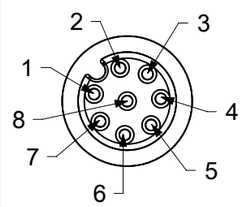	
PIN	WIRE	PIN	WIRE	PIN	WIRE	PIN	WIRE
1	BROWN	1	BROWN	1	BROWN	1	WHITE
2	---	2	WHITE	2	WHITE	2	BROWN
3	BLUE	3	BLUE	3	BLUE	3	GREEN
4	BLACK or YELLOW/GREEN	4	BLACK	4	BLACK	4	YELLOW
5	---	5	---	5	GREY or YELLOW/GREEN	5	GREY
						6	PINK
						7	BLUE
						8	RED

CODING REQUIRED TO IEC 61076-2-101

DOCUMENT STATUS	P1	RELEASE DATE	2022/04/14 06:15:30

FOR OPTIONS SEE - NUMERICAL CODE - ON SHEET 2

ITEM	QTY.	DESCRIPTION	MATERIAL	FINISH
7	1	LABEL YELLOW	VINYL	---
	-	PRINTING FOR CABLES Ixx	---	---
6	-	CABLE	SEE SHEET 2	---
5	-	OVERMOLDING BLACK	TPU	---
4	1	COUPLING NUT FEMALE	BRASS	NICKEL
3	1	INSERT FEMALE BLACK	PUR	---
2	1	ORING RED	FPM	---
1	3 / 4 / 5 / 8	CONTACT M12 FEMALE	BRASS	SELECTIVE Au OVER Ni

THIS DRAWING CONTAINS INFORMATION THAT IS PROPRIETARY TO MOLEX ELECTRONIC TECHNOLOGIES, LLC AND SHOULD NOT BE USED WITHOUT WRITTEN PERMISSION

FUNCTIONAL SYMBOLS: FA = 0, FC = 0, FP = 0

DIVISIONAL SYMBOLS

DIMENSION UNITS: mm | SCALE: 2:1

GENERAL TOLERANCES (UNLESS SPECIFIED)

ANGULAR TOL	± 1.0 °
4 PLACES	±
3 PLACES	±
2 PLACES	± 0.05
1 PLACE	± 0.1
0 PLACES	± 0.2

DRAFT WHERE APPLICABLE MUST REMAIN WITHIN DIMENSIONS

CURRENT REV DESC:

EC NO: 703046
DRWN: APAWLAK01 2022/04/12
CHK'D: RSILLER 2022/04/14
APPR: RSILLER 2022/04/14

INITIAL REVISION:
DRWN: JMARSZALEK 2016/01/11
APPR: RSILLER 2016/04/08

THIRD ANGLE PROJECTION | DRAWING: A3-SIZE | SERIES: 120065

molex

CSE M12 XP AC FE RA XM SE UNSH

PRODUCT CUSTOMER DRAWING

DOCUMENT NUMBER	DOC TYPE	DOC PART	REVISION
1200658471	PSD	000	A11

MATERIAL NUMBER	CUSTOMER	SHEET NUMBER
SEE PART LIST	GENERAL MARKET	1 OF 5

FORMAT: master_prod-A3
REVISION: J
DATE: 2020/01/14

ENGINEERING NO. - NUMERICAL CODE (Available parts see PART LIST table. Others on request).

8	0	X	0	0	1	X	X	X	X	X	X	X	X

- 80=M12x1 Single ended
- Contacts: 3=3 Contacts, 4=4 Contacts, 5=5 Contacts, 8=8 Contacts
- Heads style: 001=Plug Female 90° Angled
- Cable type: See Table
- Units: M=Meter, C=Centimeter
- Length Examples: 005=0.5 unit, 010=1 unit, 100=10 units
- OPTIONS
  - H= 2 pcs. of I/D Carrier PVC Transparent (Cables Ixx & P82 always with 2 pcs. of I/D Carrier even if no H in Engineering No.)
  - Overmold color:
    Blank (Standard)=Black TPU
    Blank=Yellow TPU for cables A09,S19,S20,S26
    Blank=Yellow TPE-E for cables K03,K05
    A=Grey / G=Black / Y=Yellow
    Blank=Yellow PVC for cable E13
  - Coupling Nut:
    Blank (Standard) & 3=Knurled Brass Ni Plated
    1=Hexagonal Stainless steel
    5=Knurled Derlin
    7=Knurled Brass Ni Plated, Teflon Coated
    Blank=7 for cables I20, I26, K03, K05, P82, S26
    9=Knurled / Hexagonal Brass Ni Plated SW13

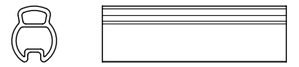

COUPLING NUTS

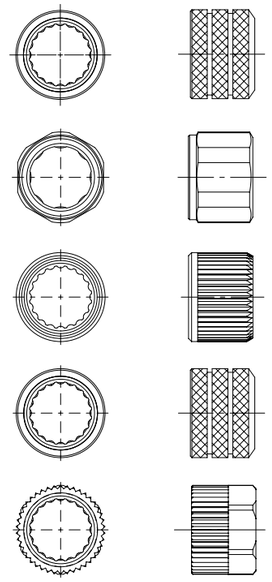

CABLE INFORMATION (for more information see Cable Data Sheet).

CABLE TYPE	NO. OF WIRES	CROSS SECTION	CABLE JACKET	UL	CSA	STATIC: TEMP. / BENDING RADIUS	DYNAMIC: TEMP. / BENDING RADIUS	DRAG CHAIN	SHIELD
A09	3 / 4 / 5	0.34mm²	PVC YELLOW	UL 2661	I/II A/B 90°C/300V	-	-	-	-
E13	3	18AWG	PVC YELLOW	UL 2661/1731	I/II A/B 80°C/300V	-	-	-	-
E02	3 / 4 / 5 / 8	0.25mm²	PVC BLACK	UL 2464/1729	C22.2 I/II A/B 80°C/300V	-30°C to +80°C, 10xO.D.	-10°C to +80°C, 15xO.D.	-	-
E03	3 / 4 / 5	0.34mm²	PVC BLACK	UL 2464/1729	C22.2 I/II A/B 80°C/300V	-30°C to +80°C, 10xO.D.	-10°C to +80°C, 15xO.D.	-	-
E52	3 / 4 / 8	0.34mm²	PVC GREY	-	-	-30°C to +70°C	-5°C to +70°C	-	-
H08	3 / 4 / 5 / 8	0.25mm²	PUR BLACK LS0H	UL 21198/10493	C22.2 I/II A/B 80°C/300V	-40°C to +80°C, 5xO.D.	-25°C to +80°C, 10xO.D.	2 000 000 cycles at 20°C, Temp. range +5°C to +60°C	-
H09	3 / 4 / 5	0.34mm²	PUR BLACK LS0H	UL 21198/10493	C22.2 I/II A/B 80°C/300V	-40°C to +80°C, 5xO.D.	-25°C to +80°C, 10xO.D.	2 000 000 cycles at 20°C, Temp. range +5°C to +60°C	-
H12	4	0.50mm²	PUR BLACK LS0H	UL 21198/10493	C22.2 I/II A/B 80°C/300V	-50°C to +80°C, 5xO.D.	-25°C to +80°C, 10xO.D.	2 000 000, Temp max 60°C	-
H69	4	0.20mm²	PUR GREY LS0H	-	-	-	-	-	-
I02	3 / 4 / 8	0.25mm²	PVC CEI GREY	-	-	-30°C to +70°C	-5°C to +70°C	-	-
I03	3 / 4 / 5	0.34mm²	PVC CEI GREY	-	-	-30°C to +70°C	-5°C to +70°C	-	-
I04	4	0.50mm²	PVC CEI GREY	-	-	-25°C to +70°C	-5°C to +70°C	-	-
I20	3 / 4	0.34mm²	PVC CEI GREY	-	-	-30°C to +70°C	-5°C to +70°C	-	YES
I26	5	0.34mm²	PVC CEI GREY	-	-	-30°C to +70°C	-5°C to +70°C	-	-
K03	5	18 AMG	TPE YELLOW	PLTC 105C E470965	I/II A/B 90°C/300V	-	-	-	-
K05	3 / 4 / 5	0.34mm²	TPE YELLOW	UL ITC E195601 or PLC	I/II A/B 90°C/300V	-	-	-	-
P02	3 / 4 / 5 / 8	0.25mm²	PUR / PVC BLACK	-	-	-30°C to +80°C, 7xO.D.	-5°C to +80°C, 15xO.D.	-	-
P03	3 / 4 / 5	0.34mm²	PUR / PVC BLACK	-	-	-30°C to +80°C, 7xO.D.	-5°C to +80°C, 15xO.D.	-	-
P12	3 / 5	0.50mm²	PUR BLACK	-	-	-30°C to +90°C	-5°C to +90°C	-	-
P19	8	0.25mm²	PUR BLACK	-	-	-40°C to +90°C, 7.5xO.D.	-15°C to +90°C, 12.5xO.D.	2 000 000 cycles, 15xO.D.	YES
P20	3 / 4 / 5	0.34mm²	PUR BLACK LS0H	-	-	-30°C to +80°C	-	-	YES
P82	3 / 4 / 5	0.34mm²	PUR IRR ORANGE	-	-	-50°C to +105°C, 5xO.D.	-40°C to +105°C, 7.5xO.D.	-	-
S19	8	0.25mm²	PVC YELLOW	UL 2661/1569	C22.2 II A 105°C/300V	-30°C to +105°C, 10xO.D.	-15°C to +105°C, 15xO.D.	-	YES
S20	3 / 4 / 5	0.34mm²	PVC YELLOW	UL 2661/1731	C22.2 II A 105°C/300V	-30°C to +105°C	-	-	YES
S26	5	0.34mm²	PVC YELLOW	UL 2661/1731	C22.2 II A 105°C/300V	-30°C to +105°C	-	-	YES

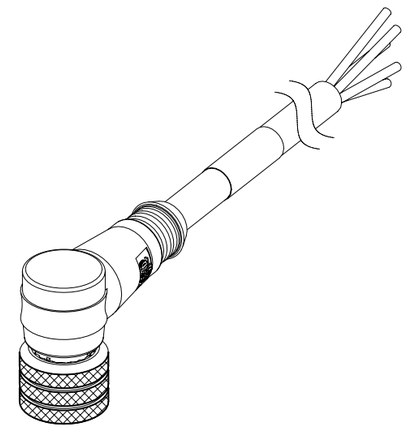

SCALE 1:1

CABLE LENGTH TOLERANCES

OVER	UP TO AND INCLUDING	TOLERANCES
0	305mm	+19mm
305mm	915mm	+45mm
915mm	1830mm	+56mm
1830mm	3660mm	+89mm
3660mm	7320mm	+165mm
7320mm	14640mm	+317mm
14640mm	30500mm	+610mm
30500mm	>	+2% of finished length

FUNCTIONAL SYMBOLS: FA = 0, FC = 0, FP = 0
DIVISIONAL SYMBOLS

THIS DRAWING CONTAINS INFORMATION THAT IS PROPRIETARY TO MOLEX ELECTRONIC TECHNOLOGIES, LLC AND SHOULD NOT BE USED WITHOUT WRITTEN PERMISSION

DIMENSION UNITS: mm | SCALE: 1:1
GENERAL TOLERANCES (UNLESS SPECIFIED)
ANGULAR TOL ± 1.0 °
4 PLACES ±
3 PLACES ±
2 PLACES ± 0.05
1 PLACE ± 0.1
0 PLACES ± 0.2
DRAFT WHERE APPLICABLE MUST REMAIN WITHIN DIMENSIONS

CURRENT REV DESC:
EC NO: 703046
DRWN: APAWLAK01 2022/04/12
CHK'D: RSILLER 2022/04/14
APPR: RSILLER 2022/04/14
INITIAL REVISION:
DRWN: JMARSZALEK 2016/01/11
APPR: RSILLER 2016/04/08

THIRD ANGLE PROJECTION | DRAWING: A3-SIZE | SERIES: 120065

molex

CSE M12 XP AC FE RA XM SE UNSH

PRODUCT CUSTOMER DRAWING

DOCUMENT NUMBER	DOC TYPE	DOC PART	REVISION
1200658471	PSD	000	A11

MATERIAL NUMBER	CUSTOMER	SHEET NUMBER
SEE PART LIST	GENERAL MARKET	2 OF 5

DOCUMENT STATUS	P1	RELEASE DATE	2022/04/14 06:15:30

FORMAT: master_Series-A3
REVISION: J
DATE: 2020/01/14

PART LIST

No.	Part No.	Engineering No.	Cable Length
1	1200060007	803001E03M020	2m
2	1200060008	803001E03M050	5m
3	1200060009	803001E03M100	10m
4	1200060010	803001I03M050	5m
5	1200060011	803001P03M020	2m
6	1200060012	803001P03M050	5m
7	1200060013	803001P03M100	10m
8	1200060021	804001E03M020	2m
9	1200060022	804001E03M050	5m
10	1200060023	804001E03M100	10m
11	1200060024	804001P03M020	2m
12	1200060025	804001P03M050	5m
13	1200060042	804001I03M050	5m
14	1200060043	804001P82M0507	5m
15	1200060175	803001E03M010	1m
16	1200060178	803001E03M030	3m
17	1200060184	803001E03M150	15m
18	1200060187	803001E03M200	20m
19	1200060202	803001I03M020	2m
20	1200060204	803001I03M030	3m
21	1200060205	803001I03M100	10m
22	1200060212	803001P03M030	3m
23	1200060216	803001P03M150	15m
24	1200060479	804001E03M010	1m
25	1200060480	804001E03M0201	2m
26	1200060481	804001E03M030	3m
27	1200060483	804001E03M0501	* 5m
28	1200060485	804001E03M1001	* 10m
29	1200060486	804001E03M150	15m
30	1200060487	804001E03M200	20m
31	1200060488	804001E03M250	25m
32	1200060489	804001E03M300	30m
33	1200060492	804001E52M100A	10m
34	1200060503	804001I03M020	2m
35	1200060505	804001I03M030	3m
36	1200060507	804001I03M100	10m
37	1200060508	804001I03M150	15m
38	1200060510	804001P03M030	3m
39	1200060516	804001P03M150	15m
40	1200060517	804001P03M200	20m
41	1200060652	805001E03M020	2m
42	1200060654	805001E03M050	5m
43	1200060655	805001E03M0501	* 5m
44	1200060657	805001E03M100	10m
45	1200060663	805001P03M020	2m
46	1200060664	805001P03M100	10m
47	1200061336	804001E03M0205	2m
48	1200061538	803001E03M051	5.1m
49	1200061552	803001E03M066	6.6m
50	1200061553	803001E03M058	5.8m
51	1200061563	805001I03M050	5m
52	1200061760	805001P03M150	15m
53	1200061850	805001I26M050	5m
54	1200061986	804001P03M010	1m
55	1200062027	803001P03M022	2.2m
56	1200062093	804001H69M100	10m
57	1200062155	804001P82M0307	3m
58	1200062161	804001P82M1007	10m
59	1200062292	803001E03M003	0.3m
60	1200062313	804001P03M100H	10m
61	1200062334	805001I03M100	10m
62	1200062520	804001P82M050	5m
63	1200062575	804001I03M0501	5m
64	1200062615	804001P82M100	10m
65	1200062764	805001P82M1007	10m
66	1200062837	803001P03M006	0.6m
67	1200062838	808001E52M100	10m
68	1200062851	803001I03M025	2.5m
69	1200063286	803001E13M030	3m
70	1200063320	803001E13M060	6m
71	1200063340	803001P03M025	2.5m
72	1200063386	805001P82M0507	5m
73	1200063532	804001I03M0505	5m
74	1200063563	804001I04M030G	3m
75	1200063564	805001I26M100	10m
76	1200063645	803001E13M100	10m
77	1200063682	803001P82M0207	2m
78	1200063754	808001P02M0501A	5m
79	1200063825	805001I03M050G	5m
80	1200064134	804001E52M050	5m
81	1200064174	804001E03M5005	50m
82	1200064210	803001I03M051	5.1m
83	1200064244	804001I03M040	4m
84	1200064289	804001P03M400	40m
85	1200064350	804001P03M120	12m
86	1200064391	804001P03M1001	10m
87	1200064433	804001H09M050G	5m
88	1200064436	804001H09M100G	10m
89	1200065013	803001P03M030G	3m
90	1200071330	804001P82M0207	2m
91	1200650814	804001E52M050A	5m
92	1200650960	808001P02M020	2m
93	1200650961	808001P02M040	4m
94	1200650962	808001P02M050	5m
95	1200650963	808001P02M100	10m
96	1200651567	804001A09M100	10m
97	1200651571	804001A09M150	15m
98	1200651575	804001A09M200	20m
99	1200651642	804001K05M050	5m
100	1200651644	804001K05M100	10m
101	1200651771	803001E52M050A	5m
102	1200651783	804001P03M020G	2m
103	1200651785	804001P03M050G	5m
104	1200651787	804001P03M100	10m
105	1200651793	805001P03M050	5m
106	1200651797	808001E52M020	2m
107	1200652147	804001P03M040	4m
108	1200655050	803001E52M050	5m
109	1200655071	805001P82M0207	2m
110	1200656064	805001E03M0271	2.7m
111	1200656065	808001E02M0601	6m
112	1200656216	808001E02M200	20m
113	1200656382	808001P02M400	40m
114	1200656595	804001E02M0501	5m
115	1200658010	804001H09M050H	5m
116	1200658011	804001H09M100H	10m
117	1200658071	804001E03M050H	5m
118	1200658089	805001P12M020	2m
119	1200658185	804001H09M150G	15m
120	1200658193	804001H09M050	5m
121	1200658194	804001H09M100	10m
122	1200658234	803001E03M0501	* 5m
123	1200658245	808001H08M050	5m
124	1200658261	808001E02M050	5m
125	1200658271	804001E03M0505	5m
126	1200658296	805001H09M020	2m
127	1200658297	805001H09M050	5m
128	1200658298	805001H09M100	10m
129	1200658310	808001E02M0501	5m
130	1200658314	805001P03M200	20m
131	1200658326	805001I03M015	1.5m
132	1200658338	804001E03M050G	5m
133	1200658339	804001E03M100G	10m
134	1200658359	805001E03M150	15m
135	1200658403	803001P03M003	0.3m
136	1200658471	805001I03M010	1m
137	1200658482	804001E03M015	1.5m
138	1200658483	808001P02M150	15m
139	1200658485	804001H69M010	1m
140	1200658513	804001H09M020	2m

NOTES:

* - Part No. with Yellow PVC overmolding

DOCUMENT STATUS	P1	RELEASE DATE	2022/04/14 06:15:30

FORMAT: master_Rev0-A3
REVISION: J
DATE: 2020/01/16

FUNCTIONAL SYMBOLS
FA = 0
FC = 0
FP = 0

DIVISIONAL SYMBOLS

THIS DRAWING CONTAINS INFORMATION THAT IS PROPRIETARY TO MOLEX ELECTRONIC TECHNOLOGIES, LLC AND SHOULD NOT BE USED WITHOUT WRITTEN PERMISSION

DIMENSION UNITS	SCALE
mm	1:1

GENERAL TOLERANCES (UNLESS SPECIFIED)

ANGULAR TOL	±	1.0 °
4 PLACES	±	
3 PLACES	±	
2 PLACES	±	0.05
1 PLACE	±	0.1
0 PLACES	±	0.2

DRAFT WHERE APPLICABLE MUST REMAIN WITHIN DIMENSIONS

CURRENT REV DESC:

EC NO: 703046
DRWN: APAWLAK01 2022/04/12
CHK'D: RSILLER 2022/04/14
APPR: RSILLER 2022/04/14

INITIAL REVISION:
DRWN: JMARSZALEK 2016/01/11
APPR: RSILLER 2016/04/08

THIRD ANGLE PROJECTION | DRAWING: A3-SIZE | SERIES: 120065

molex

CSE M12 XP AC FE RA XM SE UNSH

PRODUCT CUSTOMER DRAWING

DOCUMENT NUMBER	DOC TYPE	DOC PART	REVISION
1200658471	PSD	000	A11

MATERIAL NUMBER	CUSTOMER	SHEET NUMBER
SEE PART LIST	GENERAL MARKET	3 OF 5

PART LIST

No.	Part No.	Engineering No.	Cable Length
141	1200658541	804001E03M070	7m
142	1200658564	803001E03M040	4m
143	1200658573	805001E03M010	1m
144	1200658574	805001E03M030	3m
145	1200658575	805001E03M040	4m
146	1200658585	808001E02M010	1m
147	1200658586	808001E02M020	2m
148	1200658587	808001E02M030	3m
149	1200658589	808001E02M100	10m
150	1200658594	803001I03M040	4m
151	1200658607	805001I03M030	3m
152	1200658608	805001I03M040	4m
153	1200658619	808001P02M010	1m
154	1200658649	808001H08M020	2m
155	1200658652	808001H08M100	10m
156	1200658664	805001H09M010	1m
157	1200658666	805001H09M030	3m
158	1200658668	804001H09M010	1m
159	1200658670	804001H09M030	3m
160	1200658683	808001I02M010	1m
161	1200658684	808001I02M020	2m
162	1200658685	808001I02M030	3m
163	1200658686	808001I02M040	4m
164	1200658687	808001I02M050	5m
165	1200658688	808001I02M100	10m
166	1200658707	804001I03M010G	1m
167	1200658708	804001I03M020G	2m
168	1200658709	804001I03M030G	3m
169	1200658710	804001I03M040G	4m
170	1200658711	804001I03M050G	5m
171	1200658712	804001I03M100G	10m
172	1200658713	803001H09M010	1m
173	1200658715	803001H09M020	2m
174	1200658718	803001H09M050	5m
175	1200658719	803001H09M100	10m
176	1200658931	808001E02M150	15m
177	1200658932	808001E02M250	25m
178	1200658933	805001P12M050	5m
179	1200658934	805001P12M100	10m
180	1200658992	804001P03M050H	5m
181	1200659032	804001E02M050	5m
182	1200659033	804001E02M100	10m
183	1200659039	804001E02M070	7m
184	1200659048	804001E02M1001	10m
185	1200659068	804001I03M050Y	5m
186	1200659069	804001P82M0507Y	5m
187	1200659078	804001I03M100Y	10m
188	1200659084	805001I26M050Y	5m
189	1200659086	804001P82M1007Y	10m
190	1200659095	804001H09M050HY	5m
191	1200659112	804001H12M050	5m
192	1200659117	805001I26M100Y	10m
193	1200659118	803001I03M050Y	5m
194	1200659120	803001I03M030Y	3m
195	1200659121	803001I03M100Y	10m
196	1200659124	804001H09M100HY	10m
197	1200659140	805001H09M200	20m
198	1200659147	805001E03M200	20m
199	1200659160	804001I03M020Y	2m
200	1200659164	804001E03M025	2.5m
201	1200659168	803001I03M025Y	2.5m
202	1200659173	803001E03M050H	5m
203	1200659181	803001E03M100H	10m
204	1200659182	804001E03M020H	2m
205	1200659235	803001E03M300	30m
206	1200659251	804001H12M010	1m
207	1200659252	804001H12M030	3m
208	1200659266	804001P03M020Y	2m
209	1200659270	804001H12M100	10m
210	1200659342	804001P03M1501	* 15m
211	1200659343	804001P03M2501	* 25m
212	1200659361	804001I03M030Y	3m
213	1200659373	803001E02M030	3m
214	1200659398	808001P02M100Y	10m
215	1200659592	805001E03M080	8m
216	1200659637	808001E02M1001	10m
217	1200659771	804001H12M1009	10m
218	1200659772	804001H12M0309	3m
219	1200659773	804001H12M0509	5m
220	1200659775	803001P03M050HY	5m
221	1200668648	804001P82M0207Y	2m
222	1200658588	808001E02M040	4m
223	1200060482	804001E03M040	4m
224	1200061540	803001E03M033	3.3m
225	1200061541	803001E03M022	2.2m
226	1200061542	803001E03M011	1.1m
227	1200063648	804001E03M2001	* 20m
228	1200064145	804001E03M3001	* 30m
229	1200064402	804001E03M005	0.5m
230	1200658884	804001E03M100H	10m
231	1200658898	804001E03M150H	15m
232	1200659352	805001E03M1001	* 10m
233	1200659353	805001E03M2501	* 25m
234	1200659502	805001E03M005	0.5m
235	1200658647	808001H08M010	1m
236	1200658648	808001H08M015	1.5m
237	1200658650	808001H08M030	3m
238	1200658651	808001H08M040	4m
239	1200658196	804001H09M200	20m
240	1200658665	805001H09M015	1.5m
241	1200658667	805001H09M040	4m
242	1200658669	804001H09M015	1.5m
243	1200658671	804001H09M040	4m
244	1200658714	803001H09M015	1.5m
245	1200658716	803001H09M030	3m
246	1200658717	803001H09M040	4m
247	1200659675	804001H09M220	22m
248	1200658620	808001P02M030	3m
249	1200061318	803001P03M010	1m
250	1200063405	804001P03M003	0.3m
251	1200063793	804001P03M140	14m
252	1200652156	805001P03M060	6m
253	1200656575	805001P03M300	30m
254	1200658184	805001P03M040	4m
255	1200658206	804001P03M060	6m
256	1200658311	803001P03M200	20m
257	1200658312	803001P03M300	30m
258	1200658611	803001P03M040	4m
259	1200658617	805001P03M010	1m
260	1200658627	805001P03M030	3m
261	1200651639	804001K05M020	2m
262	1200651640	804001K05M030	3m
263	1200651628	804001K03M050	5m
264	1200651634	804001K03M100	10m
265	1200651720	805001K03M020	2m
266	1200651722	805001K03M050	5m
267	1200652155	805001K03M100	10m
268	1200658783	804001E03M060	6m
269	1200651556	804001A09M0408	4m
270	1200651557	804001A09M0402	4m
271	1200651558	804001A09M050	5m
272	1200651559	804001A09M0508	5m
273	1200651560	804001A09M0502	5m
274	1200651562	804001A09M060	6m
275	1200651563	804001A09M0608	6m
276	1200651564	804001A09M070	7m
277	1200651565	804001A09M080	8m
278	1200651566	804001A09M090	9m
279	1200651568	804001A09M1008	10m
280	1200651569	804001A09M120	12m

NOTES:

- Part No. with Yellow PVC overmolding

THIS DRAWING CONTAINS INFORMATION THAT IS PROPRIETARY TO MOLEX ELECTRONIC TECHNOLOGIES, LLC AND SHOULD NOT BE USED WITHOUT WRITTEN PERMISSION

FUNCTIONAL SYMBOLS: FA = 0, FC = 0, FP = 0

DIVISIONAL SYMBOLS

DIMENSION UNITS: mm | SCALE: 1:1

GENERAL TOLERANCES (UNLESS SPECIFIED)

ANGULAR TOL	± 1.0 °
4 PLACES	±
3 PLACES	±
2 PLACES	± 0.05
1 PLACE	± 0.1
0 PLACES	± 0.2

DRAFT WHERE APPLICABLE MUST REMAIN WITHIN DIMENSIONS

CURRENT REV DESC:

EC NO: 703046
DRWN: APAWLAK01 2022/04/12
CHK'D: RSILLER 2022/04/14
APPR: RSILLER 2022/04/14

INITIAL REVISION:
DRWN: JMARSZALEK 2016/01/11
APPR: RSILLER 2016/04/08

THIRD ANGLE PROJECTION | DRAWING: A3-SIZE | SERIES: 120065

molex

CSE M12 XP AC FE RA XM SE UNSH

PRODUCT CUSTOMER DRAWING

DOCUMENT NUMBER	DOC TYPE	DOC PART	REVISION
1200658471	PSD	000	A11

MATERIAL NUMBER	CUSTOMER	SHEET NUMBER
SEE PART LIST	GENERAL MARKET	4 OF 5

DOCUMENT STATUS	P1	RELEASE DATE	2022/04/14 06:15:30

FORMAT: molex_tpl_A3
REVISION: J
DATE: 2020/01/16

PART LIST

No.	Part No.	Engineering No.	Cable Length
281	1200651570	804001A09M1208	12m
282	1200651573	804001A09M170	17m
283	1200651574	804001A09M180	18m
284	1200651696	805001A09M005	0.5m
285	1200651697	805001A09M020	2m
286	1200651698	805001A09M0208	2m
287	1200651699	805001A09M0202	2m
288	1200651700	805001A09M040	4m
289	1200651701	805001A09M050	5m
290	1200651702	805001A09M0508	5m
291	1200651703	805001A09M060	6m
292	1200651704	805001A09M070	7m
293	1200651705	805001A09M080	8m
294	1200651706	805001A09M100	10m
295	1200651707	805001A09M1008	10m
296	1200651708	805001A09M1002	10m
297	1200651868	805001A09M0708	7m
298	1200651949	804001A09M0602	6m
299	1200651983	805001A09M030	3m
300	1200651985	803001A09M0202	2m
301	1200652078	804001A09M0302	3m
302	1200652079	805001A09M300	30m
303	1200652111	805001A09M150	15m
304	1200652122	805001A09M0502	5m
305	1200652170	804001A09C2508	0.25m
306	1200652197	805001A09M1508	15m
307	1200652216	804001A09M0708	7m
308	1200652419	804001A09M2008	20m
309	1200652439	804001A09M0108	1m
310	1200659215	805001A09M010	1m
311	1200659216	805001A09M200	20m
312	1202010010	804001A09M250	25m
313	1200060221	803001S20M020	2m
314	1200060222	803001S20M030	3m
315	1200060224	803001S20M050	5m

No.	Part No.	Engineering No.	Cable Length
316	1200659374	804001S20M350	35m
317	1200659774	808001S19M150	15m
318	1200659810	805001S26M200	20m
319	1200060225	803001S20M100	10m
320	1200060527	804001S20M010	1m
321	1200060528	804001S20M020	2m
322	1200060529	804001S20M030	3m
323	1200060531	804001S20M050	5m
324	1200061612	804001S20M030H	3m
325	1200062121	804001S20M060	6m
326	1200062148	804001I20M160	16m
327	1200062160	804001S20M100H	10m
328	1200062374	804001S20M020H	2m
329	1200062502	804001S20M050H	5m
330	1200062589	804001S20M010H	1m
331	1200062919	804001P20M100	10m
332	1200062922	804001P20M050	5m
333	1200063109	804001S20M1001	10m
334	1200063165	805001P20M050	5m
335	1200064184	804001P20M250	25m
336	1200064268	808001S19M100	10m
337	1200064380	804001S20M0201	2m
338	1200064381	804001S20M0501	5m
339	1200064452	804001S20M3001	30m
340	1200064457	803001S20M0501	5m
341	1200650910	804001S20M100	10m
342	1200655008	808001P19M050	5m
343	1200658090	805001S26M100	10m
344	1200658187	804001S20M200	20m
345	1200658203	805001S26M1001	10m
346	1200658276	804001I20M100	10m
347	1200658287	803001I20M100	10m
348	1200658324	804001P20M030	3m
349	1200658328	808001P19M100	10m
350	1200658510	804001S20M2001	20m

No.	Part No.	Engineering No.	Cable Length
351	1200658544	808001P19M250	25m
352	1200658547	803001P20M150	15m
353	1200658875	803001S20M0201G	2m
354	1200659029	804001S20M150	15m
355	1200659114	805001S26M050	5m
356	1200659156	805001S26M2001	20m
357	1200659240	803001P20M100HY	10m
358	1200657238	805001E03M250	25m
359	1200657145	804001P03M006	0.6m
360	1200657146	804001P03M070	7m
361	1200657147	804001P03M080	8m
362	1200657148	804001E03M003	0.3m
363	1200657149	804001E03M006	0.6m
364	1200657150	804001E03M080	8m
365	1200657185	805001E03M015	1.5m
366	1200658573	805001E03M010	1m
367	1200659738	804001P03M015	1.5m
368	1200657265	805001H09M500	50m
369			
370			
371			
372			
373			
374			
375			
376			
377			
378			
379			
380			
381			
382			
383			
384			
385			

THIS DRAWING CONTAINS INFORMATION THAT IS PROPRIETARY TO MOLEX ELECTRONIC TECHNOLOGIES, LLC AND SHOULD NOT BE USED WITHOUT WRITTEN PERMISSION

FUNCTIONAL SYMBOLS
FA = 0
FC = 0
FP = 0
DIVISIONAL SYMBOLS

DIMENSION UNITS	SCALE
mm	1:1

GENERAL TOLERANCES (UNLESS SPECIFIED)

ANGULAR TOL	± 1.0 °
4 PLACES	±
3 PLACES	±
2 PLACES	± 0.05
1 PLACE	± 0.1
0 PLACES	± 0.2

DRAFT WHERE APPLICABLE MUST REMAIN WITHIN DIMENSIONS

CURRENT REV DESC:

EC NO: 703046
DRWN: APAWLAK01 2022/04/12
CHK'D: RSILLER 2022/04/14
APPR: RSILLER 2022/04/14

INITIAL REVISION:
DRWN: JMARSZALEK 2016/01/11
APPR: RSILLER 2016/04/08

molex

CSE M12 XP AC FE RA XM SE UNSH

PRODUCT CUSTOMER DRAWING

DOCUMENT NUMBER	DOC TYPE	DOC PART	REVISION
1200658471	PSD	000	A11

THIRD ANGLE PROJECTION	DRAWING	SERIES
	A3-SIZE	120065

MATERIAL NUMBER	CUSTOMER	SHEET NUMBER
SEE PART LIST	GENERAL MARKET	5 OF 5

DOCUMENT STATUS	P1	RELEASE DATE	2022/04/14 06:15:30

FORMAT: master_Sheet-A3
REVISION: J
DATE: 2020/01/1