# FEMALE PLUG M12 90° ANGLED

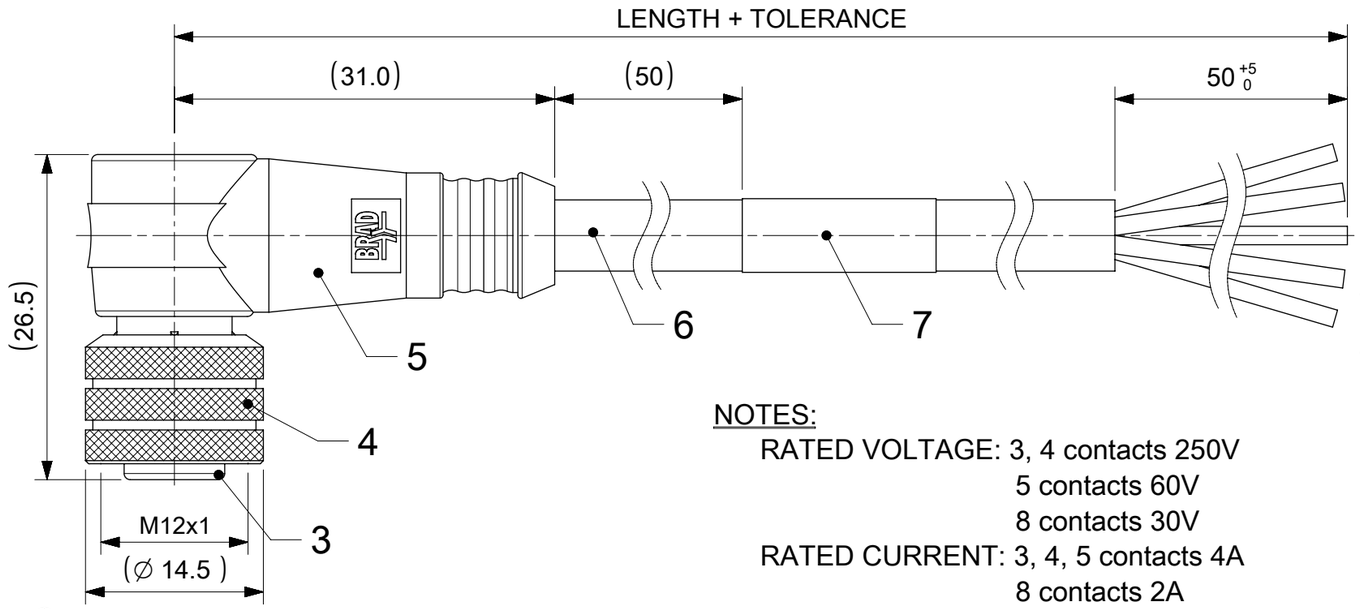


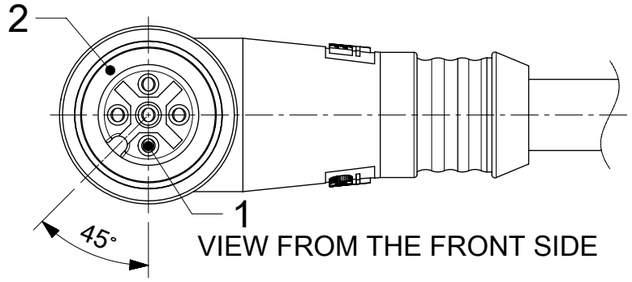


VIEW FROM THE FRONT SIDE

NOTES:

RATED VOLTAGE: 3, 4 contacts 250V
5 contacts 60V
8 contacts 30V

RATED CURRENT: 3, 4, 5 contacts 4A
8 contacts 2A

PROTECTION CLASS: IP 67

TEMPERATURE: CABLE INFORMATION ON SHEET 2

Thicker Overmold for Cables with bigger Outer Diameter

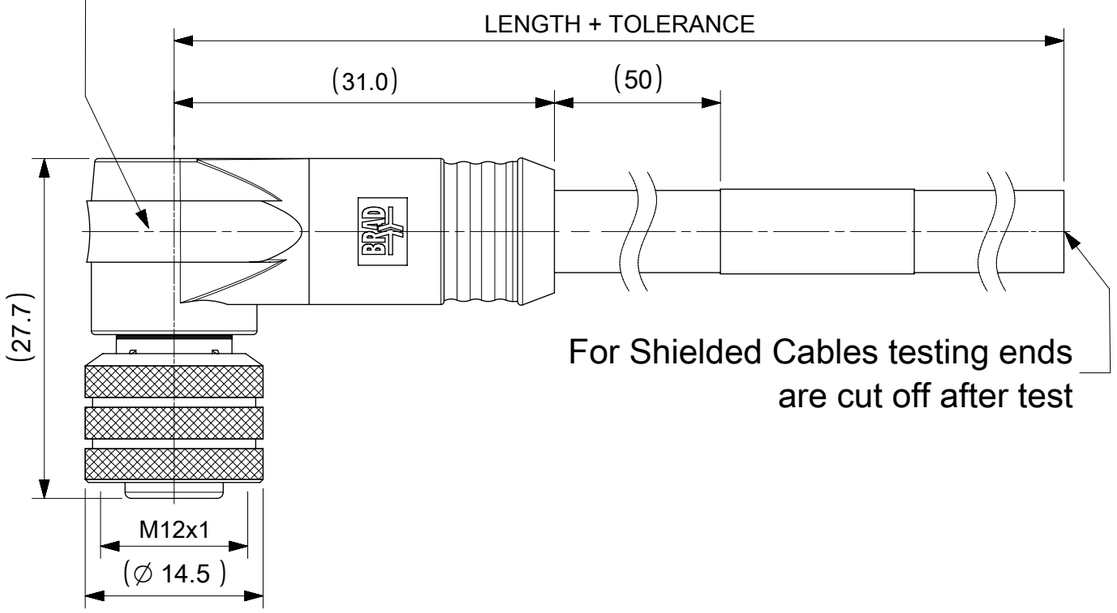


For Shielded Cables testing ends are cut off after test

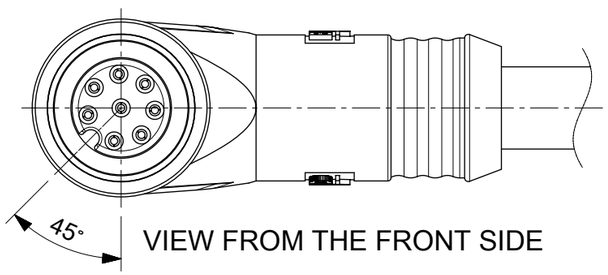


VIEW FROM THE FRONT SIDE

## CONTACTS POSITION FRONT VIEW:

| 3 CONTACTS | | 4 CONTACTS | | 5 CONTACTS | | 8 CONTACTS | |
|---|---|---|---|---|---|---|---|
| 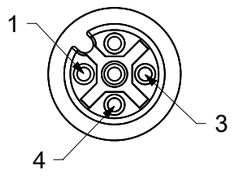 | | 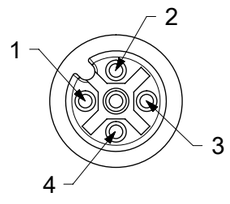 | | 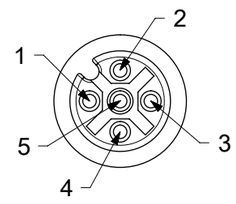 | | 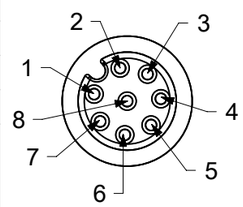 | |
| PIN | WIRE | PIN | WIRE | PIN | WIRE | PIN | WIRE |
| 1 | BROWN | 1 | BROWN | 1 | BROWN | 1 | WHITE |
| 2 | --- | 2 | WHITE | 2 | WHITE | 2 | BROWN |
| 3 | BLUE | 3 | BLUE | 3 | BLUE | 3 | GREEN |
| 4 | BLACK or YELLOW/GREEN | 4 | BLACK | 4 | BLACK | 4 | YELLOW |
| 5 | --- | 5 | --- | 5 | GREY or YELLOW/GREEN | 5 | GREY |
| | | | | | | 6 | PINK |
| | | | | | | 7 | BLUE |
| | | | | | | 8 | RED |

CODING REQUIRED TO IEC 61076-2-101

| DOCUMENT STATUS | P1 | RELEASE DATE | 2022/04/14 06:15:30 |
|---|---|---|---|

FOR OPTIONS SEE - NUMERICAL CODE - ON SHEET 2

| ITEM | QTY. | DESCRIPTION | MATERIAL | FINISH |
|---|---|---|---|---|
| 7 | 1 | LABEL YELLOW | VINYL | --- |
| | - | PRINTING FOR CABLES Ixx | --- | --- |
| 6 | - | CABLE | SEE SHEET 2 | --- |
| 5 | - | OVERMOLDING BLACK | TPU | --- |
| 4 | 1 | COUPLING NUT FEMALE | BRASS | NICKEL |
| 3 | 1 | INSERT FEMALE BLACK | PUR | --- |
| 2 | 1 | ORING RED | FPM | --- |
| 1 | 3 / 4 / 5 / 8 | CONTACT M12 FEMALE | BRASS | SELECTIVE Au OVER Ni |

THIS DRAWING CONTAINS INFORMATION THAT IS PROPRIETARY TO MOLEX ELECTRONIC TECHNOLOGIES, LLC AND SHOULD NOT BE USED WITHOUT WRITTEN PERMISSION

FUNCTIONAL SYMBOLS: FA = 0, FC = 0, FP = 0

DIVISIONAL SYMBOLS

DIMENSION UNITS: mm | SCALE: 2:1

GENERAL TOLERANCES (UNLESS SPECIFIED)

| | |
|---|---|
| ANGULAR TOL | ± 1.0 ° |
| 4 PLACES | ± |
| 3 PLACES | ± |
| 2 PLACES | ± 0.05 |
| 1 PLACE | ± 0.1 |
| 0 PLACES | ± 0.2 |

DRAFT WHERE APPLICABLE MUST REMAIN WITHIN DIMENSIONS

CURRENT REV DESC:

EC NO: 703046
DRWN: APAWLAK01 2022/04/12
CHK'D: RSILLER 2022/04/14
APPR: RSILLER 2022/04/14

INITIAL REVISION:
DRWN: JMARSZALEK 2016/01/11
APPR: RSILLER 2016/04/08

THIRD ANGLE PROJECTION | DRAWING: A3-SIZE | SERIES: 120065

molex

CSE M12 XP AC FE RA XM SE UNSH

PRODUCT CUSTOMER DRAWING

| DOCUMENT NUMBER | DOC TYPE | DOC PART | REVISION |
|---|---|---|---|
| 1200658471 | PSD | 000 | A11 |

| MATERIAL NUMBER | CUSTOMER | SHEET NUMBER |
|---|---|---|
| SEE PART LIST | GENERAL MARKET | 1 OF 5 |

FORMAT: master_prod-A3
REVISION: J
DATE: 2020/01/14

# ENGINEERING NO. - NUMERICAL CODE (Available parts see PART LIST table. Others on request).

| 8 | 0 | X | 0 | 0 | 1 | X | X | X | X | X | X | X | X |
|---|---|---|---|---|---|---|---|---|---|---|---|---|---|

- 80=M12x1 Single ended
- Contacts: 3=3 Contacts, 4=4 Contacts, 5=5 Contacts, 8=8 Contacts
- Heads style: 001=Plug Female 90° Angled
- Cable type: See Table
- Units: M=Meter, C=Centimeter
- Length Examples: 005=0.5 unit, 010=1 unit, 100=10 units
- OPTIONS
  - H= 2 pcs. of I/D Carrier PVC Transparent (Cables Ixx & P82 always with 2 pcs. of I/D Carrier even if no H in Engineering No.)
  - Overmold color:
    Blank (Standard)=Black TPU
    Blank=Yellow TPU for cables A09,S19,S20,S26
    Blank=Yellow TPE-E for cables K03,K05
    A=Grey / G=Black / Y=Yellow
    Blank=Yellow PVC for cable E13
  - Coupling Nut:
    Blank (Standard) & 3=Knurled Brass Ni Plated
    1=Hexagonal Stainless steel
    5=Knurled Derlin
    7=Knurled Brass Ni Plated, Teflon Coated
    Blank=7 for cables I20, I26, K03, K05, P82, S26
    9=Knurled / Hexagonal Brass Ni Plated SW13

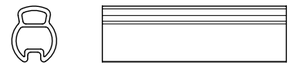

COUPLING NUTS

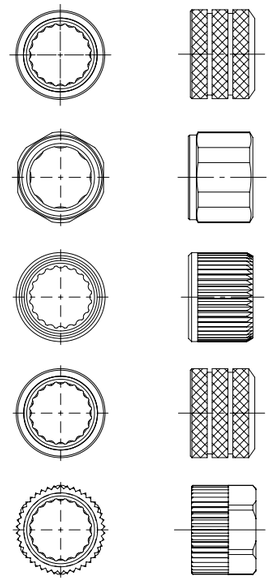

# CABLE INFORMATION (for more information see Cable Data Sheet).

| CABLE TYPE | NO. OF WIRES | CROSS SECTION | CABLE JACKET | UL | CSA | STATIC: TEMP. / BENDING RADIUS | DYNAMIC: TEMP. / BENDING RADIUS | DRAG CHAIN | SHIELD |
|---|---|---|---|---|---|---|---|---|---|
| A09 | 3 / 4 / 5 | 0.34mm² | PVC YELLOW | UL 2661 | I/II A/B 90°C/300V | - | - | - | - |
| E13 | 3 | 18AWG | PVC YELLOW | UL 2661/1731 | I/II A/B 80°C/300V | - | - | - | - |
| E02 | 3 / 4 / 5 / 8 | 0.25mm² | PVC BLACK | UL 2464/1729 | C22.2 I/II A/B 80°C/300V | -30°C to +80°C, 10xO.D. | -10°C to +80°C, 15xO.D. | - | - |
| E03 | 3 / 4 / 5 | 0.34mm² | PVC BLACK | UL 2464/1729 | C22.2 I/II A/B 80°C/300V | -30°C to +80°C, 10xO.D. | -10°C to +80°C, 15xO.D. | - | - |
| E52 | 3 / 4 / 8 | 0.34mm² | PVC GREY | - | - | -30°C to +70°C | -5°C to +70°C | - | - |
| H08 | 3 / 4 / 5 / 8 | 0.25mm² | PUR BLACK LS0H | UL 21198/10493 | C22.2 I/II A/B 80°C/300V | -40°C to +80°C, 5xO.D. | -25°C to +80°C, 10xO.D. | 2 000 000 cycles at 20°C, Temp. range +5°C to +60°C | - |
| H09 | 3 / 4 / 5 | 0.34mm² | PUR BLACK LS0H | UL 21198/10493 | C22.2 I/II A/B 80°C/300V | -40°C to +80°C, 5xO.D. | -25°C to +80°C, 10xO.D. | 2 000 000 cycles at 20°C, Temp. range +5°C to +60°C | - |
| H12 | 4 | 0.50mm² | PUR BLACK LS0H | UL 21198/10493 | C22.2 I/II A/B 80°C/300V | -50°C to +80°C, 5xO.D. | -25°C to +80°C, 10xO.D. | 2 000 000, Temp max 60°C | - |
| H69 | 4 | 0.20mm² | PUR GREY LS0H | - | - | - | - | - | - |
| I02 | 3 / 4 / 8 | 0.25mm² | PVC CEI GREY | - | - | -30°C to +70°C | -5°C to +70°C | - | - |
| I03 | 3 / 4 / 5 | 0.34mm² | PVC CEI GREY | - | - | -30°C to +70°C | -5°C to +70°C | - | - |
| I04 | 4 | 0.50mm² | PVC CEI GREY | - | - | -25°C to +70°C | -5°C to +70°C | - | - |
| I20 | 3 / 4 | 0.34mm² | PVC CEI GREY | - | - | -30°C to +70°C | -5°C to +70°C | - | YES |
| I26 | 5 | 0.34mm² | PVC CEI GREY | - | - | -30°C to +70°C | -5°C to +70°C | - | - |
| K03 | 5 | 18 AMG | TPE YELLOW | PLTC 105C E470965 | I/II A/B 90°C/300V | - | - | - | - |
| K05 | 3 / 4 / 5 | 0.34mm² | TPE YELLOW | UL ITC E195601 or PLC | I/II A/B 90°C/300V | - | - | - | - |
| P02 | 3 / 4 / 5 / 8 | 0.25mm² | PUR / PVC BLACK | - | - | -30°C to +80°C, 7xO.D. | -5°C to +80°C, 15xO.D. | - | - |
| P03 | 3 / 4 / 5 | 0.34mm² | PUR / PVC BLACK | - | - | -30°C to +80°C, 7xO.D. | -5°C to +80°C, 15xO.D. | - | - |
| P12 | 3 / 5 | 0.50mm² | PUR BLACK | - | - | -30°C to +90°C | -5°C to +90°C | - | - |
| P19 | 8 | 0.25mm² | PUR BLACK | - | - | -40°C to +90°C, 7.5xO.D. | -15°C to +90°C, 12.5xO.D. | 2 000 000 cycles, 15xO.D. | YES |
| P20 | 3 / 4 / 5 | 0.34mm² | PUR BLACK LS0H | - | - | -30°C to +80°C | - | - | YES |
| P82 | 3 / 4 / 5 | 0.34mm² | PUR IRR ORANGE | - | - | -50°C to +105°C, 5xO.D. | -40°C to +105°C, 7.5xO.D. | - | - |
| S19 | 8 | 0.25mm² | PVC YELLOW | UL 2661/1569 | C22.2 II A 105°C/300V | -30°C to +105°C, 10xO.D. | -15°C to +105°C, 15xO.D. | - | YES |
| S20 | 3 / 4 / 5 | 0.34mm² | PVC YELLOW | UL 2661/1731 | C22.2 II A 105°C/300V | -30°C to +105°C | - | - | YES |
| S26 | 5 | 0.34mm² | PVC YELLOW | UL 2661/1731 | C22.2 II A 105°C/300V | -30°C to +105°C | - | - | YES |

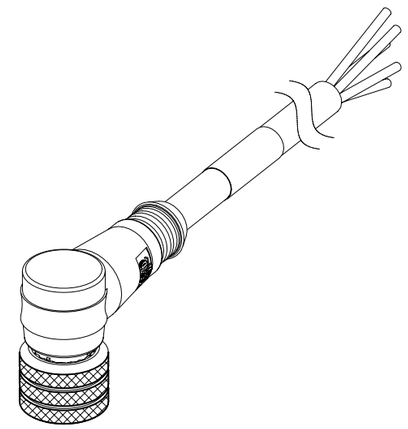

SCALE 1:1

# CABLE LENGTH TOLERANCES

| OVER | UP TO AND INCLUDING | TOLERANCES |
|---|---|---|
| 0 | 305mm | +19mm |
| 305mm | 915mm | +45mm |
| 915mm | 1830mm | +56mm |
| 1830mm | 3660mm | +89mm |
| 3660mm | 7320mm | +165mm |
| 7320mm | 14640mm | +317mm |
| 14640mm | 30500mm | +610mm |
| 30500mm | > | +2% of finished length |

FUNCTIONAL SYMBOLS: FA = 0, FC = 0, FP = 0
DIVISIONAL SYMBOLS

THIS DRAWING CONTAINS INFORMATION THAT IS PROPRIETARY TO MOLEX ELECTRONIC TECHNOLOGIES, LLC AND SHOULD NOT BE USED WITHOUT WRITTEN PERMISSION

DIMENSION UNITS: mm | SCALE: 1:1
GENERAL TOLERANCES (UNLESS SPECIFIED)
ANGULAR TOL ± 1.0 °
4 PLACES ±
3 PLACES ±
2 PLACES ± 0.05
1 PLACE ± 0.1
0 PLACES ± 0.2
DRAFT WHERE APPLICABLE MUST REMAIN WITHIN DIMENSIONS

CURRENT REV DESC:
EC NO: 703046
DRWN: APAWLAK01 2022/04/12
CHK'D: RSILLER 2022/04/14
APPR: RSILLER 2022/04/14
INITIAL REVISION:
DRWN: JMARSZALEK 2016/01/11
APPR: RSILLER 2016/04/08

THIRD ANGLE PROJECTION | DRAWING: A3-SIZE | SERIES: 120065

molex

CSE M12 XP AC FE RA XM SE UNSH

PRODUCT CUSTOMER DRAWING

| DOCUMENT NUMBER | DOC TYPE | DOC PART | REVISION |
|---|---|---|---|
| 1200658471 | PSD | 000 | A11 |

| MATERIAL NUMBER | CUSTOMER | SHEET NUMBER |
|---|---|---|
| SEE PART LIST | GENERAL MARKET | 2 OF 5 |

| DOCUMENT STATUS | P1 | RELEASE DATE | 2022/04/14 06:15:30 |
|---|---|---|---|

FORMAT: master_Series-A3
REVISION: J
DATE: 2020/01/14

# PART LIST

| No. | Part No. | Engineering No. | Cable Length |
|---|---|---|---|
| 1 | 1200060007 | 803001E03M020 | 2m |
| 2 | 1200060008 | 803001E03M050 | 5m |
| 3 | 1200060009 | 803001E03M100 | 10m |
| 4 | 1200060010 | 803001I03M050 | 5m |
| 5 | 1200060011 | 803001P03M020 | 2m |
| 6 | 1200060012 | 803001P03M050 | 5m |
| 7 | 1200060013 | 803001P03M100 | 10m |
| 8 | 1200060021 | 804001E03M020 | 2m |
| 9 | 1200060022 | 804001E03M050 | 5m |
| 10 | 1200060023 | 804001E03M100 | 10m |
| 11 | 1200060024 | 804001P03M020 | 2m |
| 12 | 1200060025 | 804001P03M050 | 5m |
| 13 | 1200060042 | 804001I03M050 | 5m |
| 14 | 1200060043 | 804001P82M0507 | 5m |
| 15 | 1200060175 | 803001E03M010 | 1m |
| 16 | 1200060178 | 803001E03M030 | 3m |
| 17 | 1200060184 | 803001E03M150 | 15m |
| 18 | 1200060187 | 803001E03M200 | 20m |
| 19 | 1200060202 | 803001I03M020 | 2m |
| 20 | 1200060204 | 803001I03M030 | 3m |
| 21 | 1200060205 | 803001I03M100 | 10m |
| 22 | 1200060212 | 803001P03M030 | 3m |
| 23 | 1200060216 | 803001P03M150 | 15m |
| 24 | 1200060479 | 804001E03M010 | 1m |
| 25 | 1200060480 | 804001E03M0201 | 2m |
| 26 | 1200060481 | 804001E03M030 | 3m |
| 27 | 1200060483 | 804001E03M0501 | * 5m |
| 28 | 1200060485 | 804001E03M1001 | * 10m |
| 29 | 1200060486 | 804001E03M150 | 15m |
| 30 | 1200060487 | 804001E03M200 | 20m |
| 31 | 1200060488 | 804001E03M250 | 25m |
| 32 | 1200060489 | 804001E03M300 | 30m |
| 33 | 1200060492 | 804001E52M100A | 10m |
| 34 | 1200060503 | 804001I03M020 | 2m |
| 35 | 1200060505 | 804001I03M030 | 3m |
| 36 | 1200060507 | 804001I03M100 | 10m |
| 37 | 1200060508 | 804001I03M150 | 15m |
| 38 | 1200060510 | 804001P03M030 | 3m |
| 39 | 1200060516 | 804001P03M150 | 15m |
| 40 | 1200060517 | 804001P03M200 | 20m |
| 41 | 1200060652 | 805001E03M020 | 2m |
| 42 | 1200060654 | 805001E03M050 | 5m |
| 43 | 1200060655 | 805001E03M0501 | * 5m |
| 44 | 1200060657 | 805001E03M100 | 10m |
| 45 | 1200060663 | 805001P03M020 | 2m |
| 46 | 1200060664 | 805001P03M100 | 10m |
| 47 | 1200061336 | 804001E03M0205 | 2m |
| 48 | 1200061538 | 803001E03M051 | 5.1m |
| 49 | 1200061552 | 803001E03M066 | 6.6m |
| 50 | 1200061553 | 803001E03M058 | 5.8m |
| 51 | 1200061563 | 805001I03M050 | 5m |
| 52 | 1200061760 | 805001P03M150 | 15m |
| 53 | 1200061850 | 805001I26M050 | 5m |
| 54 | 1200061986 | 804001P03M010 | 1m |
| 55 | 1200062027 | 803001P03M022 | 2.2m |
| 56 | 1200062093 | 804001H69M100 | 10m |
| 57 | 1200062155 | 804001P82M0307 | 3m |
| 58 | 1200062161 | 804001P82M1007 | 10m |
| 59 | 1200062292 | 803001E03M003 | 0.3m |
| 60 | 1200062313 | 804001P03M100H | 10m |
| 61 | 1200062334 | 805001I03M100 | 10m |
| 62 | 1200062520 | 804001P82M050 | 5m |
| 63 | 1200062575 | 804001I03M0501 | 5m |
| 64 | 1200062615 | 804001P82M100 | 10m |
| 65 | 1200062764 | 805001P82M1007 | 10m |
| 66 | 1200062837 | 803001P03M006 | 0.6m |
| 67 | 1200062838 | 808001E52M100 | 10m |
| 68 | 1200062851 | 803001I03M025 | 2.5m |
| 69 | 1200063286 | 803001E13M030 | 3m |
| 70 | 1200063320 | 803001E13M060 | 6m |
| 71 | 1200063340 | 803001P03M025 | 2.5m |
| 72 | 1200063386 | 805001P82M0507 | 5m |
| 73 | 1200063532 | 804001I03M0505 | 5m |
| 74 | 1200063563 | 804001I04M030G | 3m |
| 75 | 1200063564 | 805001I26M100 | 10m |
| 76 | 1200063645 | 803001E13M100 | 10m |
| 77 | 1200063682 | 803001P82M0207 | 2m |
| 78 | 1200063754 | 808001P02M0501A | 5m |
| 79 | 1200063825 | 805001I03M050G | 5m |
| 80 | 1200064134 | 804001E52M050 | 5m |
| 81 | 1200064174 | 804001E03M5005 | 50m |
| 82 | 1200064210 | 803001I03M051 | 5.1m |
| 83 | 1200064244 | 804001I03M040 | 4m |
| 84 | 1200064289 | 804001P03M400 | 40m |
| 85 | 1200064350 | 804001P03M120 | 12m |
| 86 | 1200064391 | 804001P03M1001 | 10m |
| 87 | 1200064433 | 804001H09M050G | 5m |
| 88 | 1200064436 | 804001H09M100G | 10m |
| 89 | 1200065013 | 803001P03M030G | 3m |
| 90 | 1200071330 | 804001P82M0207 | 2m |
| 91 | 1200650814 | 804001E52M050A | 5m |
| 92 | 1200650960 | 808001P02M020 | 2m |
| 93 | 1200650961 | 808001P02M040 | 4m |
| 94 | 1200650962 | 808001P02M050 | 5m |
| 95 | 1200650963 | 808001P02M100 | 10m |
| 96 | 1200651567 | 804001A09M100 | 10m |
| 97 | 1200651571 | 804001A09M150 | 15m |
| 98 | 1200651575 | 804001A09M200 | 20m |
| 99 | 1200651642 | 804001K05M050 | 5m |
| 100 | 1200651644 | 804001K05M100 | 10m |
| 101 | 1200651771 | 803001E52M050A | 5m |
| 102 | 1200651783 | 804001P03M020G | 2m |
| 103 | 1200651785 | 804001P03M050G | 5m |
| 104 | 1200651787 | 804001P03M100 | 10m |
| 105 | 1200651793 | 805001P03M050 | 5m |
| 106 | 1200651797 | 808001E52M020 | 2m |
| 107 | 1200652147 | 804001P03M040 | 4m |
| 108 | 1200655050 | 803001E52M050 | 5m |
| 109 | 1200655071 | 805001P82M0207 | 2m |
| 110 | 1200656064 | 805001E03M0271 | 2.7m |
| 111 | 1200656065 | 808001E02M0601 | 6m |
| 112 | 1200656216 | 808001E02M200 | 20m |
| 113 | 1200656382 | 808001P02M400 | 40m |
| 114 | 1200656595 | 804001E02M0501 | 5m |
| 115 | 1200658010 | 804001H09M050H | 5m |
| 116 | 1200658011 | 804001H09M100H | 10m |
| 117 | 1200658071 | 804001E03M050H | 5m |
| 118 | 1200658089 | 805001P12M020 | 2m |
| 119 | 1200658185 | 804001H09M150G | 15m |
| 120 | 1200658193 | 804001H09M050 | 5m |
| 121 | 1200658194 | 804001H09M100 | 10m |
| 122 | 1200658234 | 803001E03M0501 | * 5m |
| 123 | 1200658245 | 808001H08M050 | 5m |
| 124 | 1200658261 | 808001E02M050 | 5m |
| 125 | 1200658271 | 804001E03M0505 | 5m |
| 126 | 1200658296 | 805001H09M020 | 2m |
| 127 | 1200658297 | 805001H09M050 | 5m |
| 128 | 1200658298 | 805001H09M100 | 10m |
| 129 | 1200658310 | 808001E02M0501 | 5m |
| 130 | 1200658314 | 805001P03M200 | 20m |
| 131 | 1200658326 | 805001I03M015 | 1.5m |
| 132 | 1200658338 | 804001E03M050G | 5m |
| 133 | 1200658339 | 804001E03M100G | 10m |
| 134 | 1200658359 | 805001E03M150 | 15m |
| 135 | 1200658403 | 803001P03M003 | 0.3m |
| 136 | 1200658471 | 805001I03M010 | 1m |
| 137 | 1200658482 | 804001E03M015 | 1.5m |
| 138 | 1200658483 | 808001P02M150 | 15m |
| 139 | 1200658485 | 804001H69M010 | 1m |
| 140 | 1200658513 | 804001H09M020 | 2m |

NOTES:

* - Part No. with Yellow PVC overmolding

| | | | |
|---|---|---|---|
| DOCUMENT STATUS | P1 | RELEASE DATE | 2022/04/14 06:15:30 |

FORMAT: master_Rev0-A3
REVISION: J
DATE: 2020/01/16

FUNCTIONAL SYMBOLS
FA = 0
FC = 0
FP = 0

DIVISIONAL SYMBOLS

THIS DRAWING CONTAINS INFORMATION THAT IS PROPRIETARY TO MOLEX ELECTRONIC TECHNOLOGIES, LLC AND SHOULD NOT BE USED WITHOUT WRITTEN PERMISSION

| DIMENSION UNITS | SCALE |
|---|---|
| mm | 1:1 |

GENERAL TOLERANCES (UNLESS SPECIFIED)

| | | |
|---|---|---|
| ANGULAR TOL | ± | 1.0 ° |
| 4 PLACES | ± | |
| 3 PLACES | ± | |
| 2 PLACES | ± | 0.05 |
| 1 PLACE | ± | 0.1 |
| 0 PLACES | ± | 0.2 |

DRAFT WHERE APPLICABLE MUST REMAIN WITHIN DIMENSIONS

CURRENT REV DESC:

EC NO: 703046
DRWN: APAWLAK01 2022/04/12
CHK'D: RSILLER 2022/04/14
APPR: RSILLER 2022/04/14

INITIAL REVISION:
DRWN: JMARSZALEK 2016/01/11
APPR: RSILLER 2016/04/08

THIRD ANGLE PROJECTION | DRAWING: A3-SIZE | SERIES: 120065

molex

CSE M12 XP AC FE RA XM SE UNSH

PRODUCT CUSTOMER DRAWING

| DOCUMENT NUMBER | DOC TYPE | DOC PART | REVISION |
|---|---|---|---|
| 1200658471 | PSD | 000 | A11 |

| MATERIAL NUMBER | CUSTOMER | SHEET NUMBER |
|---|---|---|
| SEE PART LIST | GENERAL MARKET | 3 OF 5 |

# PART LIST

| No. | Part No. | Engineering No. | Cable Length |
|---|---|---|---|
| 141 | 1200658541 | 804001E03M070 | 7m |
| 142 | 1200658564 | 803001E03M040 | 4m |
| 143 | 1200658573 | 805001E03M010 | 1m |
| 144 | 1200658574 | 805001E03M030 | 3m |
| 145 | 1200658575 | 805001E03M040 | 4m |
| 146 | 1200658585 | 808001E02M010 | 1m |
| 147 | 1200658586 | 808001E02M020 | 2m |
| 148 | 1200658587 | 808001E02M030 | 3m |
| 149 | 1200658589 | 808001E02M100 | 10m |
| 150 | 1200658594 | 803001I03M040 | 4m |
| 151 | 1200658607 | 805001I03M030 | 3m |
| 152 | 1200658608 | 805001I03M040 | 4m |
| 153 | 1200658619 | 808001P02M010 | 1m |
| 154 | 1200658649 | 808001H08M020 | 2m |
| 155 | 1200658652 | 808001H08M100 | 10m |
| 156 | 1200658664 | 805001H09M010 | 1m |
| 157 | 1200658666 | 805001H09M030 | 3m |
| 158 | 1200658668 | 804001H09M010 | 1m |
| 159 | 1200658670 | 804001H09M030 | 3m |
| 160 | 1200658683 | 808001I02M010 | 1m |
| 161 | 1200658684 | 808001I02M020 | 2m |
| 162 | 1200658685 | 808001I02M030 | 3m |
| 163 | 1200658686 | 808001I02M040 | 4m |
| 164 | 1200658687 | 808001I02M050 | 5m |
| 165 | 1200658688 | 808001I02M100 | 10m |
| 166 | 1200658707 | 804001I03M010G | 1m |
| 167 | 1200658708 | 804001I03M020G | 2m |
| 168 | 1200658709 | 804001I03M030G | 3m |
| 169 | 1200658710 | 804001I03M040G | 4m |
| 170 | 1200658711 | 804001I03M050G | 5m |
| 171 | 1200658712 | 804001I03M100G | 10m |
| 172 | 1200658713 | 803001H09M010 | 1m |
| 173 | 1200658715 | 803001H09M020 | 2m |
| 174 | 1200658718 | 803001H09M050 | 5m |
| 175 | 1200658719 | 803001H09M100 | 10m |
| 176 | 1200658931 | 808001E02M150 | 15m |
| 177 | 1200658932 | 808001E02M250 | 25m |
| 178 | 1200658933 | 805001P12M050 | 5m |
| 179 | 1200658934 | 805001P12M100 | 10m |
| 180 | 1200658992 | 804001P03M050H | 5m |
| 181 | 1200659032 | 804001E02M050 | 5m |
| 182 | 1200659033 | 804001E02M100 | 10m |
| 183 | 1200659039 | 804001E02M070 | 7m |
| 184 | 1200659048 | 804001E02M1001 | 10m |
| 185 | 1200659068 | 804001I03M050Y | 5m |
| 186 | 1200659069 | 804001P82M0507Y | 5m |
| 187 | 1200659078 | 804001I03M100Y | 10m |
| 188 | 1200659084 | 805001I26M050Y | 5m |
| 189 | 1200659086 | 804001P82M1007Y | 10m |
| 190 | 1200659095 | 804001H09M050HY | 5m |
| 191 | 1200659112 | 804001H12M050 | 5m |
| 192 | 1200659117 | 805001I26M100Y | 10m |
| 193 | 1200659118 | 803001I03M050Y | 5m |
| 194 | 1200659120 | 803001I03M030Y | 3m |
| 195 | 1200659121 | 803001I03M100Y | 10m |
| 196 | 1200659124 | 804001H09M100HY | 10m |
| 197 | 1200659140 | 805001H09M200 | 20m |
| 198 | 1200659147 | 805001E03M200 | 20m |
| 199 | 1200659160 | 804001I03M020Y | 2m |
| 200 | 1200659164 | 804001E03M025 | 2.5m |
| 201 | 1200659168 | 803001I03M025Y | 2.5m |
| 202 | 1200659173 | 803001E03M050H | 5m |
| 203 | 1200659181 | 803001E03M100H | 10m |
| 204 | 1200659182 | 804001E03M020H | 2m |
| 205 | 1200659235 | 803001E03M300 | 30m |
| 206 | 1200659251 | 804001H12M010 | 1m |
| 207 | 1200659252 | 804001H12M030 | 3m |
| 208 | 1200659266 | 804001P03M020Y | 2m |
| 209 | 1200659270 | 804001H12M100 | 10m |
| 210 | 1200659342 | 804001P03M1501 | * 15m |
| 211 | 1200659343 | 804001P03M2501 | * 25m |
| 212 | 1200659361 | 804001I03M030Y | 3m |
| 213 | 1200659373 | 803001E02M030 | 3m |
| 214 | 1200659398 | 808001P02M100Y | 10m |
| 215 | 1200659592 | 805001E03M080 | 8m |
| 216 | 1200659637 | 808001E02M1001 | 10m |
| 217 | 1200659771 | 804001H12M1009 | 10m |
| 218 | 1200659772 | 804001H12M0309 | 3m |
| 219 | 1200659773 | 804001H12M0509 | 5m |
| 220 | 1200659775 | 803001P03M050HY | 5m |
| 221 | 1200668648 | 804001P82M0207Y | 2m |
| 222 | 1200658588 | 808001E02M040 | 4m |
| 223 | 1200060482 | 804001E03M040 | 4m |
| 224 | 1200061540 | 803001E03M033 | 3.3m |
| 225 | 1200061541 | 803001E03M022 | 2.2m |
| 226 | 1200061542 | 803001E03M011 | 1.1m |
| 227 | 1200063648 | 804001E03M2001 | * 20m |
| 228 | 1200064145 | 804001E03M3001 | * 30m |
| 229 | 1200064402 | 804001E03M005 | 0.5m |
| 230 | 1200658884 | 804001E03M100H | 10m |
| 231 | 1200658898 | 804001E03M150H | 15m |
| 232 | 1200659352 | 805001E03M1001 | * 10m |
| 233 | 1200659353 | 805001E03M2501 | * 25m |
| 234 | 1200659502 | 805001E03M005 | 0.5m |
| 235 | 1200658647 | 808001H08M010 | 1m |
| 236 | 1200658648 | 808001H08M015 | 1.5m |
| 237 | 1200658650 | 808001H08M030 | 3m |
| 238 | 1200658651 | 808001H08M040 | 4m |
| 239 | 1200658196 | 804001H09M200 | 20m |
| 240 | 1200658665 | 805001H09M015 | 1.5m |
| 241 | 1200658667 | 805001H09M040 | 4m |
| 242 | 1200658669 | 804001H09M015 | 1.5m |
| 243 | 1200658671 | 804001H09M040 | 4m |
| 244 | 1200658714 | 803001H09M015 | 1.5m |
| 245 | 1200658716 | 803001H09M030 | 3m |
| 246 | 1200658717 | 803001H09M040 | 4m |
| 247 | 1200659675 | 804001H09M220 | 22m |
| 248 | 1200658620 | 808001P02M030 | 3m |
| 249 | 1200061318 | 803001P03M010 | 1m |
| 250 | 1200063405 | 804001P03M003 | 0.3m |
| 251 | 1200063793 | 804001P03M140 | 14m |
| 252 | 1200652156 | 805001P03M060 | 6m |
| 253 | 1200656575 | 805001P03M300 | 30m |
| 254 | 1200658184 | 805001P03M040 | 4m |
| 255 | 1200658206 | 804001P03M060 | 6m |
| 256 | 1200658311 | 803001P03M200 | 20m |
| 257 | 1200658312 | 803001P03M300 | 30m |
| 258 | 1200658611 | 803001P03M040 | 4m |
| 259 | 1200658617 | 805001P03M010 | 1m |
| 260 | 1200658627 | 805001P03M030 | 3m |
| 261 | 1200651639 | 804001K05M020 | 2m |
| 262 | 1200651640 | 804001K05M030 | 3m |
| 263 | 1200651628 | 804001K03M050 | 5m |
| 264 | 1200651634 | 804001K03M100 | 10m |
| 265 | 1200651720 | 805001K03M020 | 2m |
| 266 | 1200651722 | 805001K03M050 | 5m |
| 267 | 1200652155 | 805001K03M100 | 10m |
| 268 | 1200658783 | 804001E03M060 | 6m |
| 269 | 1200651556 | 804001A09M0408 | 4m |
| 270 | 1200651557 | 804001A09M0402 | 4m |
| 271 | 1200651558 | 804001A09M050 | 5m |
| 272 | 1200651559 | 804001A09M0508 | 5m |
| 273 | 1200651560 | 804001A09M0502 | 5m |
| 274 | 1200651562 | 804001A09M060 | 6m |
| 275 | 1200651563 | 804001A09M0608 | 6m |
| 276 | 1200651564 | 804001A09M070 | 7m |
| 277 | 1200651565 | 804001A09M080 | 8m |
| 278 | 1200651566 | 804001A09M090 | 9m |
| 279 | 1200651568 | 804001A09M1008 | 10m |
| 280 | 1200651569 | 804001A09M120 | 12m |

NOTES:

- Part No. with Yellow PVC overmolding

THIS DRAWING CONTAINS INFORMATION THAT IS PROPRIETARY TO MOLEX ELECTRONIC TECHNOLOGIES, LLC AND SHOULD NOT BE USED WITHOUT WRITTEN PERMISSION

FUNCTIONAL SYMBOLS: FA = 0, FC = 0, FP = 0

DIVISIONAL SYMBOLS

DIMENSION UNITS: mm | SCALE: 1:1

GENERAL TOLERANCES (UNLESS SPECIFIED)

| | |
|---|---|
| ANGULAR TOL | ± 1.0 ° |
| 4 PLACES | ± |
| 3 PLACES | ± |
| 2 PLACES | ± 0.05 |
| 1 PLACE | ± 0.1 |
| 0 PLACES | ± 0.2 |

DRAFT WHERE APPLICABLE MUST REMAIN WITHIN DIMENSIONS

CURRENT REV DESC:

EC NO: 703046
DRWN: APAWLAK01 2022/04/12
CHK'D: RSILLER 2022/04/14
APPR: RSILLER 2022/04/14

INITIAL REVISION:
DRWN: JMARSZALEK 2016/01/11
APPR: RSILLER 2016/04/08

THIRD ANGLE PROJECTION | DRAWING: A3-SIZE | SERIES: 120065

molex

CSE M12 XP AC FE RA XM SE UNSH

PRODUCT CUSTOMER DRAWING

| DOCUMENT NUMBER | DOC TYPE | DOC PART | REVISION |
|---|---|---|---|
| 1200658471 | PSD | 000 | A11 |

| MATERIAL NUMBER | CUSTOMER | SHEET NUMBER |
|---|---|---|
| SEE PART LIST | GENERAL MARKET | 4 OF 5 |

| DOCUMENT STATUS | P1 | RELEASE DATE | 2022/04/14 06:15:30 |
|---|---|---|---|

FORMAT: molex_tpl_A3
REVISION: J
DATE: 2020/01/16

# PART LIST

| No. | Part No. | Engineering No. | Cable Length |
|---|---|---|---|
| 281 | 1200651570 | 804001A09M1208 | 12m |
| 282 | 1200651573 | 804001A09M170 | 17m |
| 283 | 1200651574 | 804001A09M180 | 18m |
| 284 | 1200651696 | 805001A09M005 | 0.5m |
| 285 | 1200651697 | 805001A09M020 | 2m |
| 286 | 1200651698 | 805001A09M0208 | 2m |
| 287 | 1200651699 | 805001A09M0202 | 2m |
| 288 | 1200651700 | 805001A09M040 | 4m |
| 289 | 1200651701 | 805001A09M050 | 5m |
| 290 | 1200651702 | 805001A09M0508 | 5m |
| 291 | 1200651703 | 805001A09M060 | 6m |
| 292 | 1200651704 | 805001A09M070 | 7m |
| 293 | 1200651705 | 805001A09M080 | 8m |
| 294 | 1200651706 | 805001A09M100 | 10m |
| 295 | 1200651707 | 805001A09M1008 | 10m |
| 296 | 1200651708 | 805001A09M1002 | 10m |
| 297 | 1200651868 | 805001A09M0708 | 7m |
| 298 | 1200651949 | 804001A09M0602 | 6m |
| 299 | 1200651983 | 805001A09M030 | 3m |
| 300 | 1200651985 | 803001A09M0202 | 2m |
| 301 | 1200652078 | 804001A09M0302 | 3m |
| 302 | 1200652079 | 805001A09M300 | 30m |
| 303 | 1200652111 | 805001A09M150 | 15m |
| 304 | 1200652122 | 805001A09M0502 | 5m |
| 305 | 1200652170 | 804001A09C2508 | 0.25m |
| 306 | 1200652197 | 805001A09M1508 | 15m |
| 307 | 1200652216 | 804001A09M0708 | 7m |
| 308 | 1200652419 | 804001A09M2008 | 20m |
| 309 | 1200652439 | 804001A09M0108 | 1m |
| 310 | 1200659215 | 805001A09M010 | 1m |
| 311 | 1200659216 | 805001A09M200 | 20m |
| 312 | 1202010010 | 804001A09M250 | 25m |
| 313 | 1200060221 | 803001S20M020 | 2m |
| 314 | 1200060222 | 803001S20M030 | 3m |
| 315 | 1200060224 | 803001S20M050 | 5m |

| No. | Part No. | Engineering No. | Cable Length |
|---|---|---|---|
| 316 | 1200659374 | 804001S20M350 | 35m |
| 317 | 1200659774 | 808001S19M150 | 15m |
| 318 | 1200659810 | 805001S26M200 | 20m |
| 319 | 1200060225 | 803001S20M100 | 10m |
| 320 | 1200060527 | 804001S20M010 | 1m |
| 321 | 1200060528 | 804001S20M020 | 2m |
| 322 | 1200060529 | 804001S20M030 | 3m |
| 323 | 1200060531 | 804001S20M050 | 5m |
| 324 | 1200061612 | 804001S20M030H | 3m |
| 325 | 1200062121 | 804001S20M060 | 6m |
| 326 | 1200062148 | 804001I20M160 | 16m |
| 327 | 1200062160 | 804001S20M100H | 10m |
| 328 | 1200062374 | 804001S20M020H | 2m |
| 329 | 1200062502 | 804001S20M050H | 5m |
| 330 | 1200062589 | 804001S20M010H | 1m |
| 331 | 1200062919 | 804001P20M100 | 10m |
| 332 | 1200062922 | 804001P20M050 | 5m |
| 333 | 1200063109 | 804001S20M1001 | 10m |
| 334 | 1200063165 | 805001P20M050 | 5m |
| 335 | 1200064184 | 804001P20M250 | 25m |
| 336 | 1200064268 | 808001S19M100 | 10m |
| 337 | 1200064380 | 804001S20M0201 | 2m |
| 338 | 1200064381 | 804001S20M0501 | 5m |
| 339 | 1200064452 | 804001S20M3001 | 30m |
| 340 | 1200064457 | 803001S20M0501 | 5m |
| 341 | 1200650910 | 804001S20M100 | 10m |
| 342 | 1200655008 | 808001P19M050 | 5m |
| 343 | 1200658090 | 805001S26M100 | 10m |
| 344 | 1200658187 | 804001S20M200 | 20m |
| 345 | 1200658203 | 805001S26M1001 | 10m |
| 346 | 1200658276 | 804001I20M100 | 10m |
| 347 | 1200658287 | 803001I20M100 | 10m |
| 348 | 1200658324 | 804001P20M030 | 3m |
| 349 | 1200658328 | 808001P19M100 | 10m |
| 350 | 1200658510 | 804001S20M2001 | 20m |

| No. | Part No. | Engineering No. | Cable Length |
|---|---|---|---|
| 351 | 1200658544 | 808001P19M250 | 25m |
| 352 | 1200658547 | 803001P20M150 | 15m |
| 353 | 1200658875 | 803001S20M0201G | 2m |
| 354 | 1200659029 | 804001S20M150 | 15m |
| 355 | 1200659114 | 805001S26M050 | 5m |
| 356 | 1200659156 | 805001S26M2001 | 20m |
| 357 | 1200659240 | 803001P20M100HY | 10m |
| 358 | 1200657238 | 805001E03M250 | 25m |
| 359 | 1200657145 | 804001P03M006 | 0.6m |
| 360 | 1200657146 | 804001P03M070 | 7m |
| 361 | 1200657147 | 804001P03M080 | 8m |
| 362 | 1200657148 | 804001E03M003 | 0.3m |
| 363 | 1200657149 | 804001E03M006 | 0.6m |
| 364 | 1200657150 | 804001E03M080 | 8m |
| 365 | 1200657185 | 805001E03M015 | 1.5m |
| 366 | 1200658573 | 805001E03M010 | 1m |
| 367 | 1200659738 | 804001P03M015 | 1.5m |
| 368 | 1200657265 | 805001H09M500 | 50m |
| 369 | | | |
| 370 | | | |
| 371 | | | |
| 372 | | | |
| 373 | | | |
| 374 | | | |
| 375 | | | |
| 376 | | | |
| 377 | | | |
| 378 | | | |
| 379 | | | |
| 380 | | | |
| 381 | | | |
| 382 | | | |
| 383 | | | |
| 384 | | | |
| 385 | | | |

THIS DRAWING CONTAINS INFORMATION THAT IS PROPRIETARY TO MOLEX ELECTRONIC TECHNOLOGIES, LLC AND SHOULD NOT BE USED WITHOUT WRITTEN PERMISSION

FUNCTIONAL SYMBOLS
FA = 0
FC = 0
FP = 0
DIVISIONAL SYMBOLS

| DIMENSION UNITS | SCALE |
|---|---|
| mm | 1:1 |

GENERAL TOLERANCES (UNLESS SPECIFIED)

| | |
|---|---|
| ANGULAR TOL | ± 1.0 ° |
| 4 PLACES | ± |
| 3 PLACES | ± |
| 2 PLACES | ± 0.05 |
| 1 PLACE | ± 0.1 |
| 0 PLACES | ± 0.2 |

DRAFT WHERE APPLICABLE MUST REMAIN WITHIN DIMENSIONS

CURRENT REV DESC:

EC NO: 703046
DRWN: APAWLAK01 2022/04/12
CHK'D: RSILLER 2022/04/14
APPR: RSILLER 2022/04/14

INITIAL REVISION:
DRWN: JMARSZALEK 2016/01/11
APPR: RSILLER 2016/04/08

molex

CSE M12 XP AC FE RA XM SE UNSH

PRODUCT CUSTOMER DRAWING

| DOCUMENT NUMBER | DOC TYPE | DOC PART | REVISION |
|---|---|---|---|
| 1200658471 | PSD | 000 | A11 |

| THIRD ANGLE PROJECTION | DRAWING | SERIES |
|---|---|---|
| | A3-SIZE | 120065 |

| MATERIAL NUMBER | CUSTOMER | SHEET NUMBER |
|---|---|---|
| SEE PART LIST | GENERAL MARKET | 5 OF 5 |

| DOCUMENT STATUS | P1 | RELEASE DATE | 2022/04/14 06:15:30 |
|---|---|---|---|

FORMAT: master_Sheet-A3
REVISION: J
DATE: 2020/01/1