PART No. MATRIX

E	1	6	A	0	6	0	1	2	M	X	X	X	X

- E=ETHERNET/ Ethernet
- HEADS: 1 = M12 D-Coding; 6 = RJ45
- WIRING TYPE: A=4 Pole (STRAIGHT WIRED)
- HEADS STYLE: 060 = MALE STR / MALE STR
- CABLE TYPE : CABLE 12
- UNITS: M= METER; T=10x METER
- LENGTH EXAMPLES: 005=0.5 m; 010=1 m; 150=15 m; T100=100 m
- H= 2 PCS. OF I/D Carrier

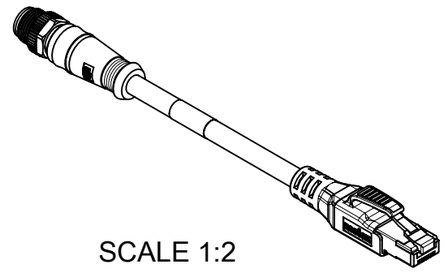

SCALE 1:2

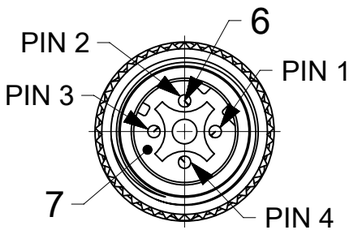

VIEW FROM THE FRONT SIDE
RJ45 HIDED FOR CLARITY
SCALE 2:1

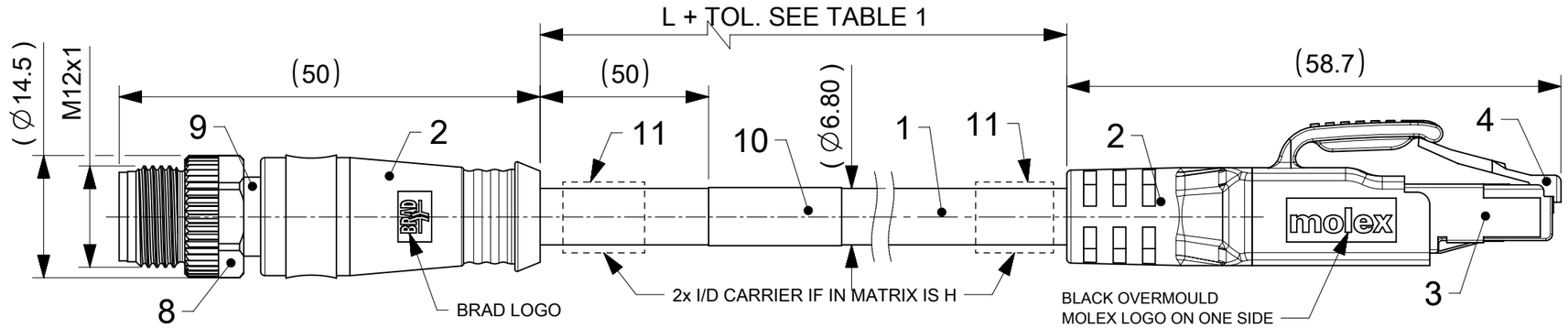

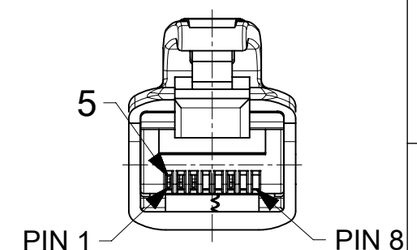

CONNECTOR PIN ASSIGNMENT
VIEW FROM THE FRONT SIDE
M12 HIDED FOR CLARITY
SCALE 2:1

WIRING DIAGRAM

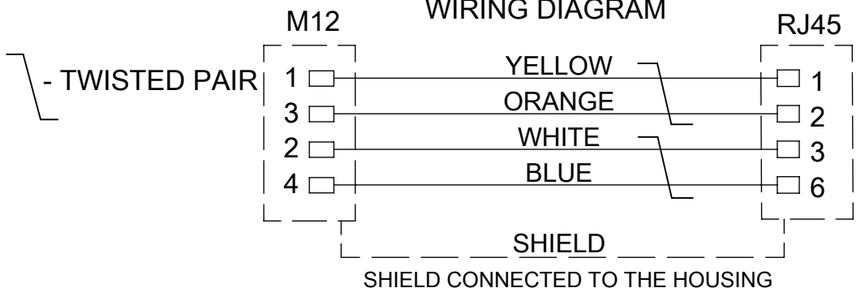

SHIELD CONNECTED TO THE HOUSING

TABLE 1

MOLEX PN	ENGINEERING NO	L (m)
1201080521	E16A06012M010	1
1201080522	E16A06012M020	2
1201088654	E16A06012M025	2.5
1201088331	E16A06012M030	3
1201088332	E16A06012M040	4
1201088333	E16A06012M050	5
1201088334	E16A06012M060	6
1201088335	E16A06012M080	8
1201088336	E16A06012M090	9
1201080524	E16A06012M100	10
1201088338	E16A06012M120	12
1201088339	E16A06012M150	15
1201088340	E16A06012M200	20
1201088341	E16A06012M250	25
1201088342	E16A06012M300	30
1201088343	E16A06012M350	35
1201088344	E16A06012M400	40
1201088345	E16A06012M450	45
1201088346	E16A06012M500	50
1201088347	E16A06012M550	55
1201088348	E16A06012M600	60
1201088349	E16A06012M650	65
1201088350	E16A06012M700	70
1201088351	E16A06012M750	75
1201088352	E16A06012M800	80
1201089011	E16A06012M850	85

MOLEX PN	ENGINEERING NO	L (m)
WITH ID CARRIER		
1201088290	E16A06012M005H	0.5
1201088299	E16A06012M002H	0.2
1201088272	E16A06012M010H	1
1201088266	E16A06012M020H	2
1201088399	E16A06012M030H	3
1201088813	E16A06012M040H	4
1201088273	E16A06012M050H	5
1201089028	E16A06012M060H	6
1201089032	E16A06012M650H	6.5
1201089029	E16A06012M070H	7
1201088537	E16A06012M080H	8
1201088274	E16A06012M100H	10
1201088843	E16A06012M120H	12
1201088275	E16A06012M150H	15
1201088276	E16A06012M200H	20
1201088277	E16A06012M250H	25
1201088278	E16A06012M300H	30
1201088292	E16A06012M400H	40
1201088838	E16A06012M350H	35
1201088938	E16A06012M450H	45
1201088279	E16A06012M500H	50
1201089031	E16A06012M550H	55
1201088400	E16A06012M600H	60
1201088286	E16A06012M700H	70
1201088949	E16A06012M750H	75
1201089033	E16A06012M800H	80
1201089034	E16A06012M850H	85
1201088291	E16A06012M900H	90
1201088401	E16A06012T100H	100

TECHNICAL DATA :
M12 D-Coded to RJ45 CAT5e Cordset AWG22 straight green inline 360° shielded.

Poles : 4
Max. Voltage : 30V A.C. or 42V D.C.
Max. Current : 1.5A
Contact resistance : ≤10 mΩ
Insulation Withstand : >100MΩ
Protection M12 / RJ45 : IP67 / IP20
Temparature range : -25°C to 85°C

Transmission characteristics
ACCORDING TO ISO 11801 CATEGORY 5e
PATCH CORD PROFINET TYPE C

Packaging :
The cordsets are packed in a polybag.

TABLE 2

CABLE LENGTH TOLERANCES	
LENGTH	TOLERANCE
0m-1m	+40 mm
>1m-5m	+60 mm
>5m-10m	+80 mm
>10m-20m	+140 mm
>20m-30m	+160 mm
>30m	+1% length

BOM
* NOTE : ID CARRIER APPLICABLE, IF ENGINEERING No. HAS "H" (SEE TABLE1)

ITEM	QTY	DESCRIPTION	MATERIAL	FINISH/COLOR
11	2	ID CARRIER	PVC	TRANSPARENT
10	1	LABEL 2.0X1.75	VINYL	YELLOW
9	1	M12 M STR SHLD	BRASS	Ni-PLATED
8	1	NUT M12 MALE	BRASS	Ni-PLATED
7	1	INSERT 4P M12 MALE	PUR	BLACK
6	4	CONTACT 10 MALE	Cu/Ni2	GOLD OVER NICKEL
5	4	CONTACT RJ45	PHOSPHOR BRONZE	SELECTIVE GOLD
4	1	PLUG RJ45 TRANSPARENT	PC	-
3	1	SHIELD	BRASS	TIN
2	-	MOULDING MATERIAL	TPU	BLACK
1	-	CABLE 2x2x22AWG SHIELD	TPU	GREEN

FUNCTIONAL SYMBOLS: FA = 0; FC = 0; FD = 0
DIVISIONAL SYMBOLS

THIS DRAWING CONTAINS INFORMATION THAT IS PROPRIETARY TO MOLEX ELECTRONIC TECHNOLOGIES, LLC AND SHOULD NOT BE USED WITHOUT WRITTEN PERMISSION

DIMENSION UNITS: mm; SCALE: 3:2
GENERAL TOLERANCES (UNLESS SPECIFIED)
ANGULAR TOL ± °
4 PLACES ±
3 PLACES ±
2 PLACES ±
1 PLACE ±
0 PLACES ±
DRAFT WHERE APPLICABLE MUST REMAIN WITHIN DIMENSIONS

CURRENT REV DESC: NEW PNS ADDED
EC NO: 677462
DRWN: MDHARMANTI 2021/07/28
CHK'D: RSILLER 2021/09/13
APPR: RSILLER 2021/09/13
INITIAL REVISION:
DRWN: MDHARMANTI 2020/01/13
APPR: RSILLER 2021/06/02

THIRD ANGLE PROJECTION | DRAWING: A3-SIZE | SERIES: 120108

molex

CSE M12 ETH 4P DC MA STR WSOR RJ45
XM DE SHLD D6.8 GN

PRODUCT CUSTOMER DRAWING

DOCUMENT NUMBER	DOC TYPE	DOC PART	REVISION
1201080521	PSD	000	A1

MATERIAL NUMBER	CUSTOMER	SHEET NUMBER
SEE TABLE 1	GENERAL MARKET	1 OF 1

DOCUMENT STATUS	P1	RELEASE DATE	2021/09/13 14:20:57

FORMAT: molex_Sheet_A3
REVISION: J
DATE: 2020/01/14