ELECTRICAL DIAGRAM

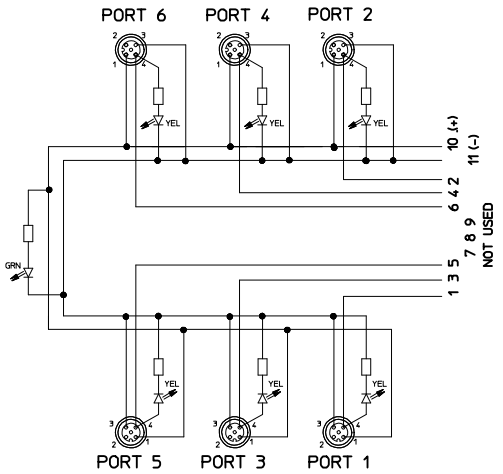

GENERAL CHARACTERISTICS:

VOLTAGE:	10-30 V DC
RATED CURRENT:	4 A PER PORT / 12 A MAX: TOTAL
IP DEGREE OF PROTECTION:	IP 68
TEMPERATURE RANGE:	-5°C TO +70°C

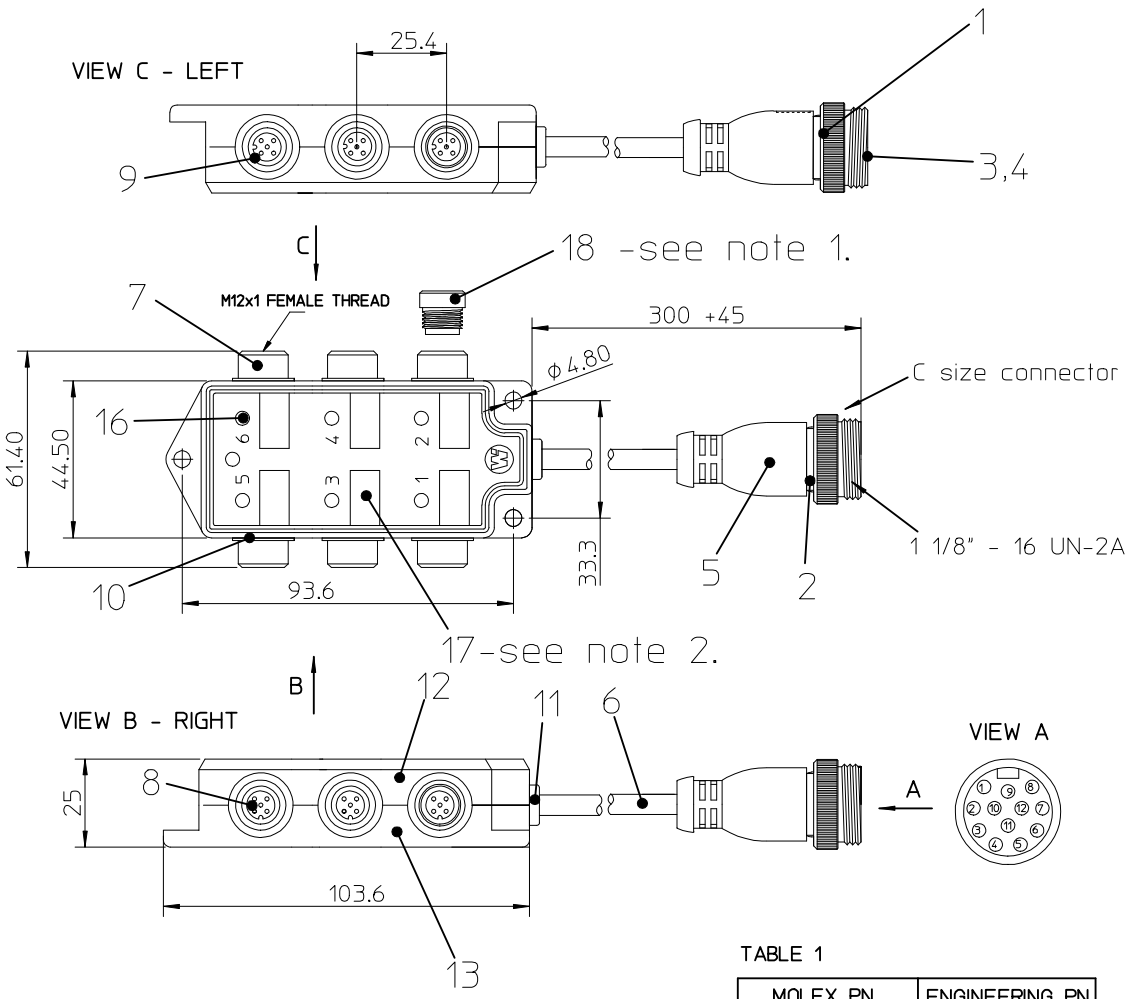

NOTES:

1. BLANKING PLUG ONLY ON PORT 1 AND 2.
2. PLASTIC LABELS ARE IN SEPARATE BAG.

TABLE 1

MOLEX PN	ENGINEERING PN
1201150072	BSY606P-FBI

ITEM	QTY.	DESCRIPTION	MATERIAL	FINISH
19	-	WEVO RESIN	-	NATURAL
18	2	BLANKING PLUG	PA	BLACK
17	7	PLASTIC LABEL	PVC	WHITE
16	7	LENS LED	EMS GRIVORY	TRANSPARENT
15	5	SCREW	METAL ALLOY	ZINC PLATED
14	1	HIGH CURRENT PCB	-	-
13	1	HOUSING BOTTOM	PA	YELLOW
12	1	HOUSING TOP	PA	YELLOW
11	1	GROMMET	NBR	BLACK
10	6	O-RING 0.489IDX0.07	NBR	BLACK
9	6	O-RING 7.1X1.35	FPM	RED
8	6	M12 FEMALE HOUSING	PA	BLACK
7	6	M12 FEMALE SHELL	ZINC	ELECTROPHORETIC BLACK
6	-	CABLE CEI GRY 3X0.75, 8X0.34	PVC	GREY
5	-	OVERMOULD	PVC	YELLOW
4	3	PIN CONTACTS 18AWG	BRASS	GOLD OVER NICKEL
3	9	PIN CONTACTS 22AWG	BRASS	GOLD OVER NICKEL
2	1	MALE HOUSING 12P	PVC	YELLOW
1	1	MALE NUT - C SIZE	ALUMINIUM	BLACK ANODISED

ORIGINAL RELEASE
EC NO: IPG2014-1274
DRWN:MSZWAJKOWSKI 2014/01/20
CH'KD:EPEZDA 2014/01/20
APPR:MIWASIECZKO 2014/01/21
DESCRIPTION
A
REV

QUALITY SYMBOLS
▼=0
Ⓒ=0

GENERAL TOLERANCES (UNLESS SPECIFIED)

	mm	INCH
4 PLACES	± ---	± ---
3 PLACES	± ---	± ---
2 PLACES	± 0.05	± ---
1 PLACE	± 0.3	± ---
0 PLACE	± 0.5	± ---
ANGULAR ± 1 °		

DRAFT WHERE APPLICABLE MUST REMAIN WITHIN DIMENSIONS

DIMENSION STYLE: MM ONLY
SCALE: ---
DESIGN UNITS: METRIC
THIRD ANGLE PROJECTION

DRAWN BY: MSZWAJKOWSKI DATE: 2014/01/20
CHECKED BY: EPEZDA DATE: 2014/01/20
APPROVED BY: MIWASIECZKO DATE: 2014/01/21
MATERIAL NO.: SEE TABLE 1

TITLE: DBO MC PNP 6PT AC PVC 0.3M

molex

DOCUMENT NO.: SD-120115-012
SHEET NO.: 1 OF 1
SIZE: A3

THIS DRAWING CONTAINS INFORMATION THAT IS PROPRIETARY TO MOLEX INCORPORATED AND SHOULD NOT BE USED WITHOUT WRITTEN PERMISSION