CIRCUIT SIZE	DIM. "A"
2	21.08 / .830
3	28.58 / 1.125
4	36.07 / 1.420
5	43.56 / 1.715
6	51.05 / 2.010
8	66.04 / 2.600

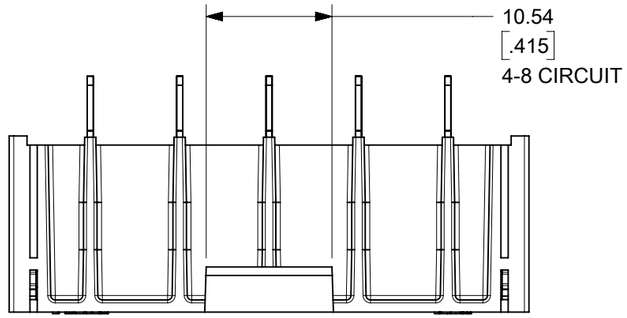

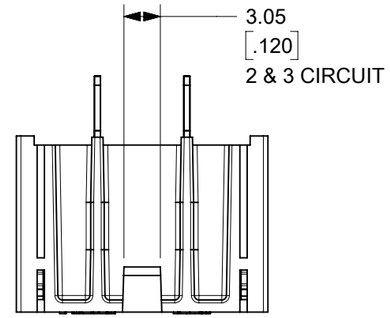

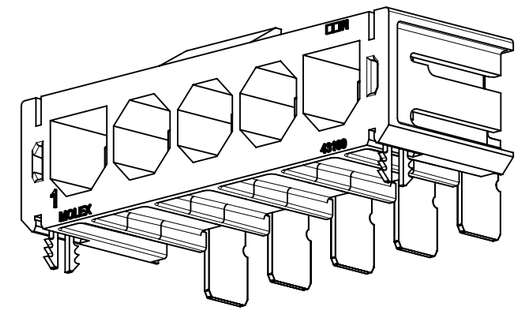

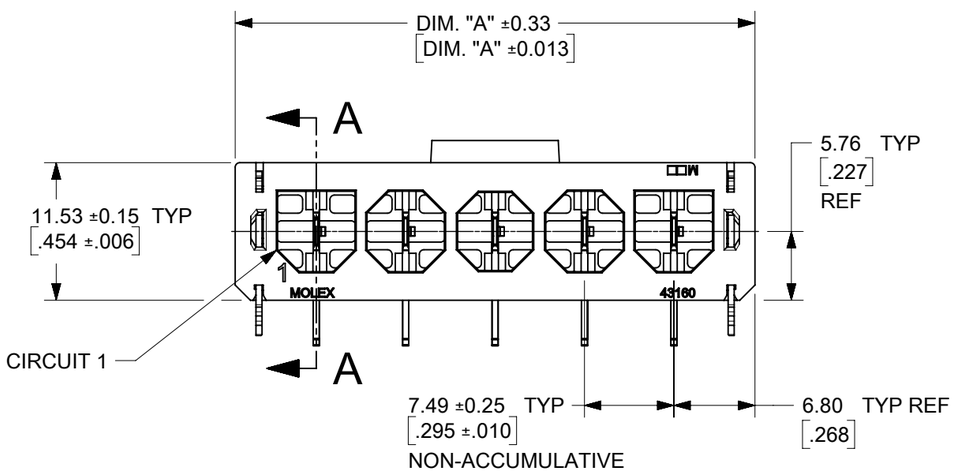

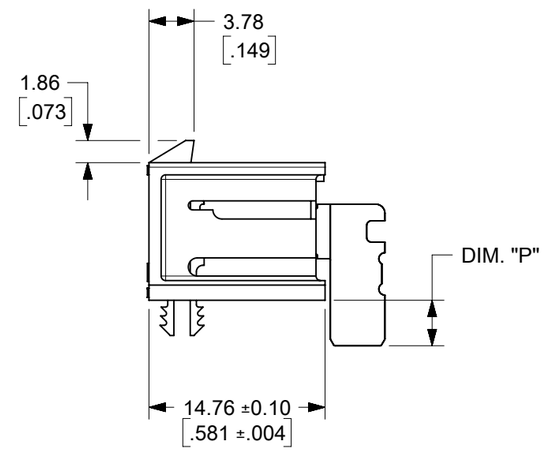

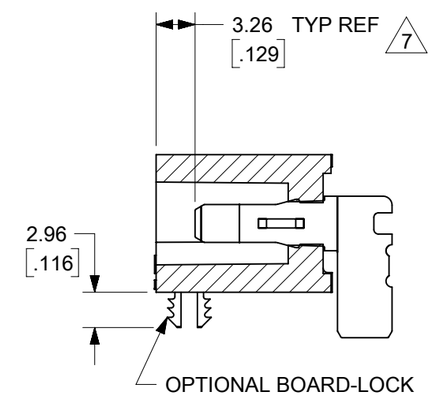

SECTION A-A

NOTES:
1. MATERIALS
   HOUSING: GLASS-FILLED, LIQUID CRYSTAL POLYMER (LCP), UL94V-0,
   LOW-HALOGEN, GLOW-WIRE CAPABLE, COLOR: BLACK
   TERMINALS: ETP COPPER
2. FINISHES:
   0.00254/.000100 MIN SELECT SILVER AND 0.00254/.000100 MIN
   SELECT MATTE TIN OVER NICKEL OVERALL
3. PRODUCT SPECIFICATION: PS-171825-001
4. PACKAGING INFORMATION: PK-43789-001 (TRAY PACK)
5. MATES WITH:
   171825 FEMALE CRIMP TERMINALS
   172672 RECEPTACLE HOUSINGS
6. THIS PART CONFORMS TO CLASS B REQUIREMENTS OF COSMETIC SPEC PS-45499-002.
7. HEADERS ARE DESIGNED TO MINIMIZE ACCESSIBILITY TO LIVE PARTS, PER UL 1977 AND UL 60950 FINGER PROBE REQUIREMENTS.
8. SLOTTED VIAS, PLATED THRU. MOLEX RECOMMENDS ANNULAR RING DESIGN PARAMETERS AS SPECIFIED IN IPC-2221, GENERIC STANDARD ON PRINTED BOARD DESIGN.
9. 3.00/1.18 MOUNTING-HOLES (NON-PLATED) FOR OPTIONAL BOARD-LOCKS SHOWN.

DOCUMENT STATUS	P1	RELEASE DATE	2022/07/01 22:19:46

THIS DRAWING CONTAINS INFORMATION THAT IS PROPRIETARY TO MOLEX ELECTRONIC TECHNOLOGIES, LLC AND SHOULD NOT BE USED WITHOUT WRITTEN PERMISSION

FUNCTIONAL SYMBOLS: E/A = 0, E/C = 0, E/P = 0
DIVISIONAL SYMBOLS

DIMENSION UNITS: MM/INCH
SCALE: 2:1

GENERAL TOLERANCES (UNLESS SPECIFIED)

	MM	INCH
4 PLACES	±	±
3 PLACES	±	± 0.005
2 PLACES	± 0.13	± 0.01
1 PLACE	± 0.25	±
0 PLACES	±	±
ANGULAR TOL	± 0.5 °	

DRAFT WHERE APPLICABLE MUST REMAIN WITHIN DIMENSIONS

CURRENT REV DESC: ADD 172043-0209

EC NO: 702587
DRWN: MKIPPER 2022/03/04
CHK'D: MKIPPER 2022/05/09
APPR: FSMITH 2022/05/09

INITIAL REVISION:
DRWN: BANDERSON 2013/06/21
APPR: BANDERSON 2013/06/25

THIRD ANGLE PROJECTION | DRAWING: B-SIZE | SERIES: 172043

molex

SUPER-SABRE RIGHT-ANGLE
HEADER ASSY SINGLE-ROW, FINGER-PROOF

PRODUCT CUSTOMER DRAWING

DOCUMENT NUMBER	DOC TYPE	DOC PART	REVISION
SD-172043-001	PSD	001	C2

MATERIAL NUMBER	CUSTOMER	SHEET NUMBER
SEE CHART	GENERAL MARKET	1 OF 2

ASSEMBLY PART NO.	CIRCUITS	DIM. 'P' ± 0.51/.020	BOARD LOCK
172043-0201	2	3.81/(.150) (SHORT TAIL)	NO
172043-0301	3		
172043-0401	4		
172043-0501	5		
172043-0601	6		
172043-0801	8		
172043-0202	2	3.81/(.150) (SHORT TAIL)	YES
172043-0302	3		
172043-0402	4		
172043-0502	5		
172043-0602	6		
172043-0802	8		
172043-0205	2	5.33/(.210) (LONG TAIL)	NO
172043-0305	3		
172043-0405	4		
172043-0505	5		
172043-0605	6		
172043-0805	8		
172043-0206	2	5.33/(.210) (LONG TAIL)	YES
172043-0306	3		
172043-0406	4		
172043-0506	5		
172043-0606	6		
172043-0806	8		
172043-0209	2	2.70/(.106) (EXTRA SHORT)	YES

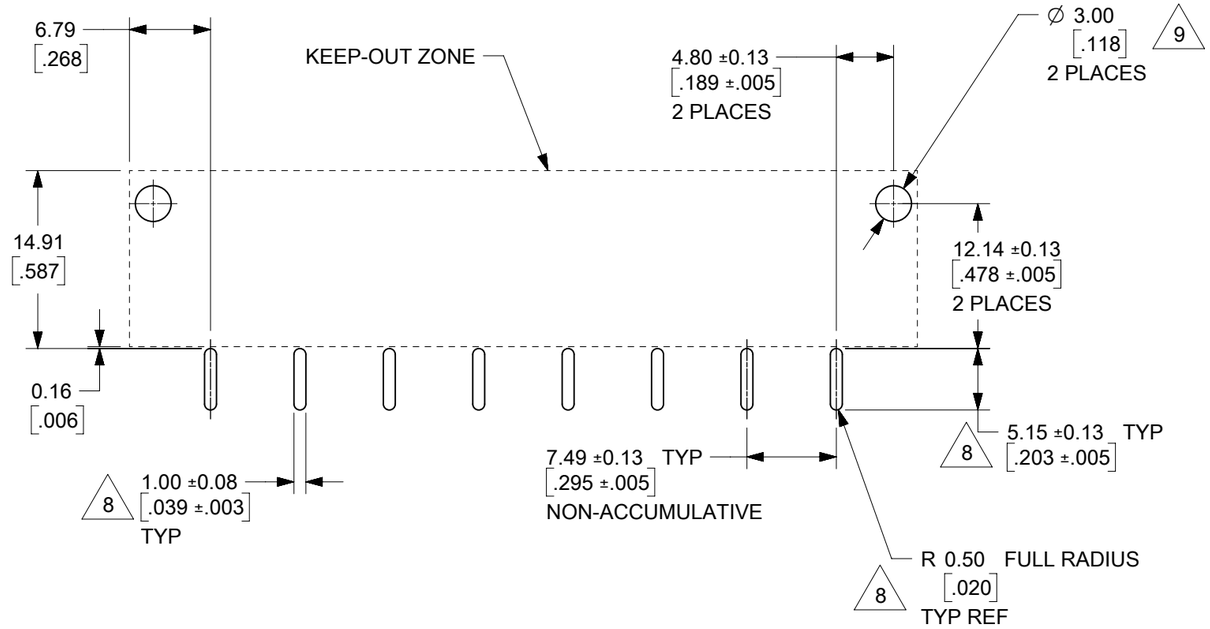

RECOMMENDED P.C. BOARD LAYOUT
FOR RIGHT ANGLE SUPER-SABRE HEADERS
(8 CIRCUIT SHOWN)
SEE NOTES 8 & 9

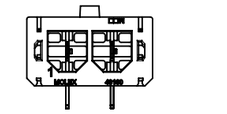
2 CIRCUIT

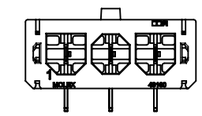
3 CIRCUIT

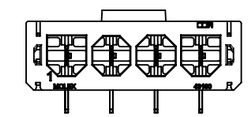
4 CIRCUIT

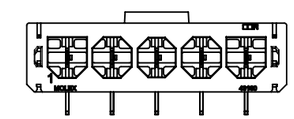
5 CIRCUIT

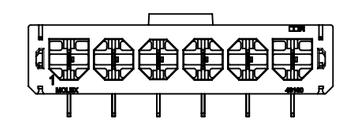
6 CIRCUIT

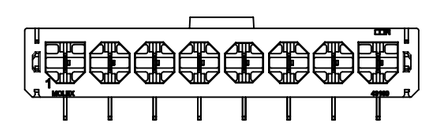
8 CIRCUIT

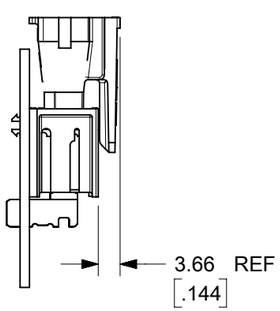

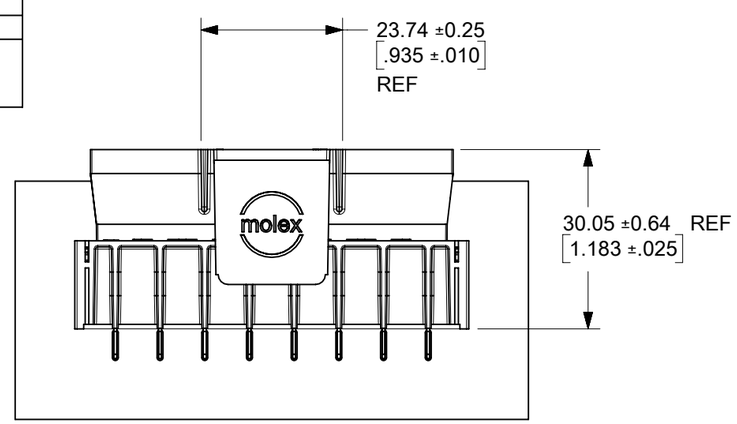

FUNCTIONAL SYMBOLS	
E/A	= 0
E/C	= 0
E/P	= 0
DIVISIONAL SYMBOLS	

THIS DRAWING CONTAINS INFORMATION THAT IS PROPRIETARY TO MOLEX ELECTRONIC TECHNOLOGIES, LLC AND SHOULD NOT BE USED WITHOUT WRITTEN PERMISSION

DIMENSION UNITS	SCALE
MM/INCH	1:1

GENERAL TOLERANCES (UNLESS SPECIFIED)

	MM	INCH
4 PLACES	±	±
3 PLACES	±	± 0.005
2 PLACES	± 0.13	± 0.01
1 PLACE	± 0.25	±
0 PLACES	±	±
ANGULAR TOL	± 0.5 °	

DRAFT WHERE APPLICABLE MUST REMAIN WITHIN DIMENSIONS

CURRENT REV DESC: ADD 172043-0209

EC NO: 702587
DRWN: MKIPPER 2022/03/04
CHK'D: MKIPPER 2022/05/09
APPR: FSMITH 2022/05/09

INITIAL REVISION:
DRWN: BANDERSON 2013/06/21
APPR: BANDERSON 2013/06/25

THIRD ANGLE PROJECTION | DRAWING: B-SIZE | SERIES: 172043

molex

SUPER-SABRE RIGHT-ANGLE
HEADER ASSY SINGLE-ROW, FINGER-PROOF

PRODUCT CUSTOMER DRAWING

DOCUMENT NUMBER	DOC TYPE	DOC PART	REVISION
SD-172043-001	PSD	001	C2

MATERIAL NUMBER	CUSTOMER	SHEET NUMBER
SEE CHART	GENERAL MARKET	2 OF 2

DOCUMENT STATUS	P1	RELEASE DATE	2022/07/01 22:19:46

FORMAT: Eng-lega-master-tb-prod-B
REVISION: E1
DATE: 2021/05/01