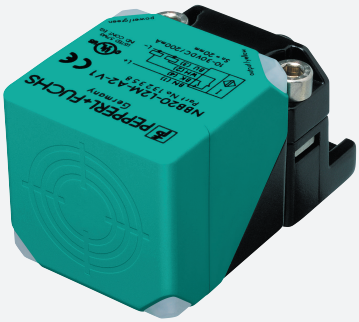

Inductive sensor

NBB20-L2M-E2-V1

- Sensor head bidirectional and rotatable
- 20 mm flush
- 3-wire DC
- 4-way LED indicator

Dimensions

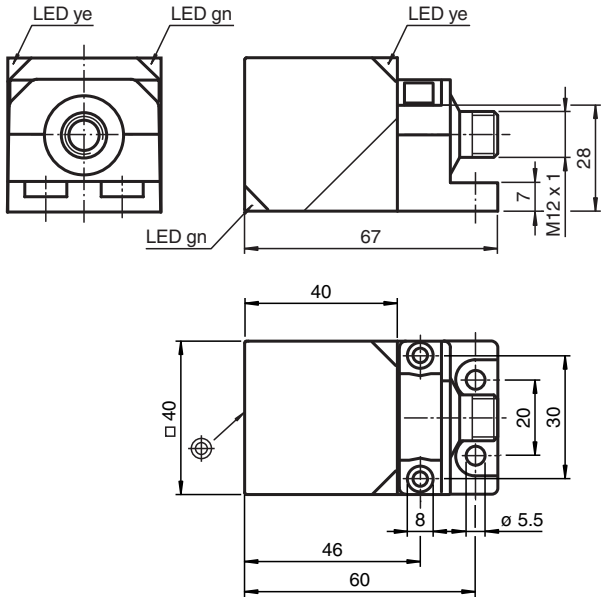

Technical Data

General specifications		
Switching function		Normally open (NO)
Output type		PNP
Rated operating distance	s_n	20 mm
Installation		flush
Output polarity		DC
Assured operating distance	s_a	0 ... 16.2 mm
Actual operating distance	s_r	18 ... 22 mm
Reduction factor r_{Al}		0.33
Reduction factor r_{Cu}		0.31

Release date: 2022-06-22 Date of issue: 2022-06-22 Filename: 187534_eng.pdf

Technical Data

Reduction factor r_{304}		0.74
Reduction factor r_{Brass}		0.41
Output type		3-wire
Nominal ratings		
Operating voltage	U_B	10 ... 30 V DC
Switching frequency	f	0 ... 440 Hz
Hysteresis	H	typ. 5 %
Reverse polarity protection		reverse polarity protected
Short-circuit protection		pulsing
Voltage drop	U_d	≤ 2 V
Operating current	I_L	0 ... 200 mA
Off-state current	I_r	0 ... 0.5 mA
No-load supply current	I_0	≤ 20 mA
Time delay before availability	t_v	80 ms
Operating voltage indicator		LED, green
Switching state indicator		LED, yellow
Functional safety related parameters		
$MTTF_d$		1289 a
Mission Time (T_M)		20 a
Diagnostic Coverage (DC)		0 %
Compliance with standards and directives		
Standard conformity		
Standards		EN 60947-5-2:2007 EN 60947-5-2/A1:2012 IEC 60947-5-2:2007 IEC 60947-5-2 AMD 1:2012
Approvals and certificates		
EAC conformity		TR CU 020/2011
Protection class		II
Rated insulation voltage	U_i	253 V
Rated impulse withstand voltage	U_{imp}	4000 V
UL approval		cULus Listed, General Purpose
CCC approval		CCC approval / marking not required for products rated ≤36 V
Ambient conditions		
Ambient temperature		-25 ... 85 °C (-13 ... 185 °F)
Storage temperature		-40 ... 85 °C (-40 ... 185 °F)
Mechanical specifications		
Connection type		Connector plug M12 x 1 , 4-pin
Housing material		PA-GF35 metal base Xylan coated metal mounting flange Xylan coated.
Sensing face		PA-GF35
Degree of protection		IP69K
Cable		
Cable diameter		3.3 mm ± 0.15 mm
Mass		155 g

Release date: 2022-06-22 Date of issue: 2022-06-22 Filename: 187534_eng.pdf

Connection

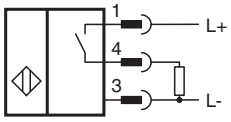

Connection Assignment

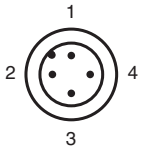

Wire colors in accordance with EN 60947-5-2

1	BN	(brown)
2	WH	(white)
3	BU	(blue)
4	BK	(black)

Accessories

	**V1-G-2M-PUR**	Female cordset single-ended M12 straight A-coded, 4-pin, PUR cable grey
	**V1-W-2M-PUR**	Female cordset single-ended M12 angled A-coded, 4-pin, PUR cable grey
	**MHW 01**	Modular mounting bracket
	**MH 02-L**	Mounting aid for VariKont-L

Release date: 2022-06-22 Date of issue: 2022-06-22 Filename: 187534_eng.pdf