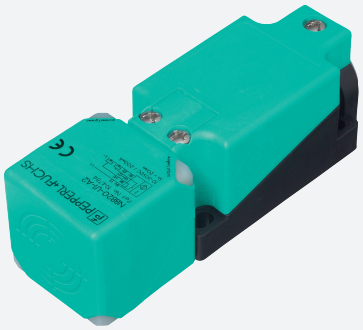

Inductive sensor

NBB15-U1-E2

- Sensor head bidirectional and rotatable
- 4 LEDs indicator for 360° visibility
- 15 mm flush

Dimensions

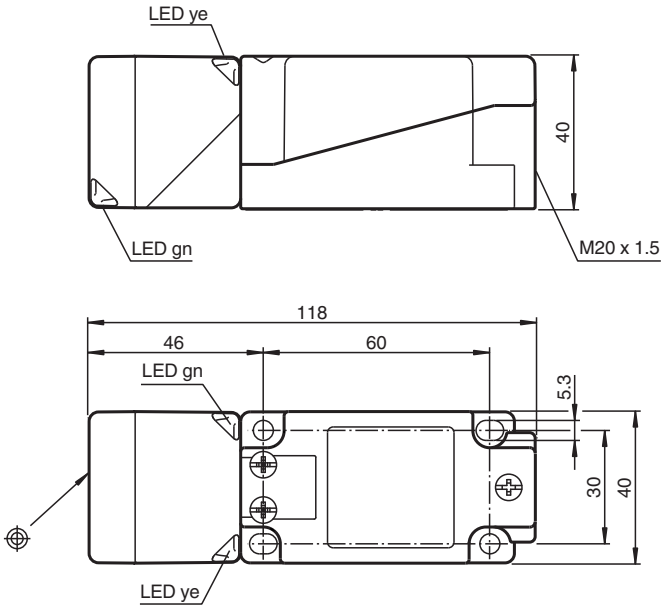

Technical Data

General specifications		
Switching function		Normally open (NO)
Output type		PNP
Rated operating distance	s_n	15 mm
Installation		flush
Output polarity		DC
Assured operating distance	s_a	0 ... 12.15 mm
Actual operating distance	s_r	13.5 ... 16.5 mm typ. 15 mm
Reduction factor r_{Al}		0.33
Reduction factor r_{Cu}		0.31

Release date: 2022-06-30 Date of issue: 2022-06-30 Filename: 194767_eng.pdf

Technical Data

Reduction factor r_{304}		0.74
Reduction factor r_{Brass}		0.41
Output type		3-wire
Nominal ratings		
Operating voltage	U_B	10 ... 30 V
Switching frequency	f	0 ... 560 Hz
Hysteresis	H	typ. 5 %
Reverse polarity protection		reverse polarity protected
Short-circuit protection		pulsing
Voltage drop	U_d	≤ 2 V
Operating current	I_L	0 ... 200 mA
Off-state current	I_r	0 ... 0.5 mA typ. 0.01 mA
No-load supply current	I_0	≤ 20 mA
Time delay before availability	t_v	80 ms
Operating voltage indicator		LED, green
Switching state indicator		LED, yellow
Functional safety related parameters		
$MTTF_d$		1289 a
Mission Time (T_M)		20 a
Diagnostic Coverage (DC)		0 %
Compliance with standards and directives		
Standard conformity		
Standards		EN 60947-5-2:2007 EN 60947-5-2/A1:2012 IEC 60947-5-2:2007 IEC 60947-5-2 AMD 1:2012
Approvals and certificates		
EAC conformity		TR CU 020/2011
UL approval		cULus Listed, General Purpose
CCC approval		CCC approval / marking not required for products rated ≤36 V
Ambient conditions		
Ambient temperature		-25 ... 85 °C (-13 ... 185 °F)
Mechanical specifications		
Connection type		screw terminals
Information for connection		A maximum of two conductors with the same core cross section may be mounted on one terminal connection! tightening torque 1.2 Nm + 10 %
Core cross section		up to 2.5 mm²
Minimum core cross-section		without wire end ferrule 0.5 mm² , with connector sleeves 0.34 mm²
Maximum core cross-section		without wire end ferrule 2.5 mm² , with connector sleeves 1.5 mm²
Housing material		PA/metal with epoxy powder coating
Sensing face		PA
Housing base		plastic
Degree of protection		IP68 / IP69K
Mass		225 g
Note		Tightening torque: 1.8 Nm (housing)

Release date: 2022-06-30 Date of issue: 2022-06-30 Filename: 194767_eng.pdf

Connection

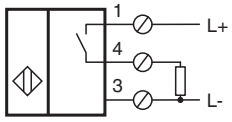

Accessories

	**MHW 01**	Modular mounting bracket
	**V1-M20-80**	Receptacles, M12/M20; plastic version

Release date: 2022-06-30 Date of issue: 2022-06-30 Filename: 194767_eng.pdf