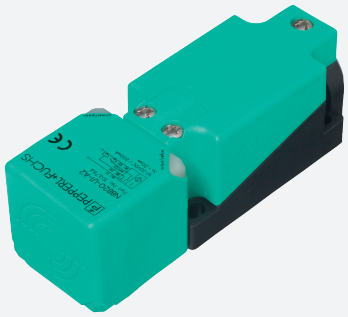

# Inductive sensor

## NBB15-U1-Z2

- Sensor head bidirectional and rotatable
- 15 mm flush
- 2 LEDs indicator for 360° visibility

## Dimensions

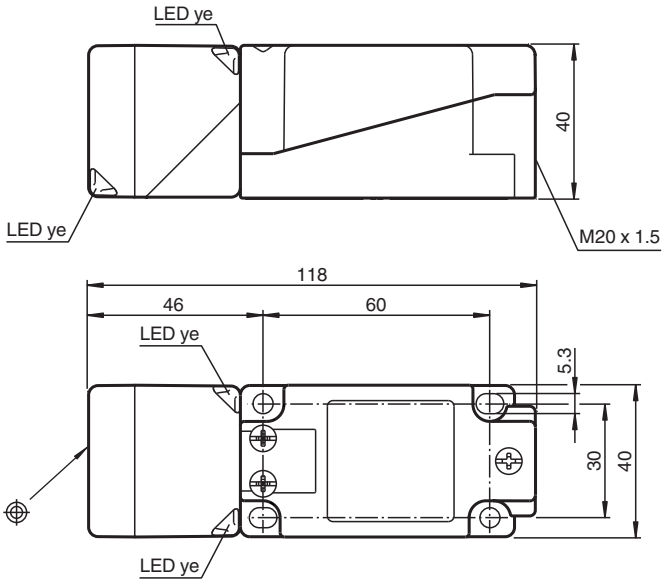


## Technical Data

| General specifications | | |
|---|---|---|
| Switching function | | Normally open/closed (NO/NC) |
| Output type | | Two-wire |
| Rated operating distance | $s_n$ | 15 mm |
| Installation | | flush |
| Output polarity | | DC |
| Assured operating distance | $s_a$ | 0 ... 12.15 mm |
| Actual operating distance | $s_r$ | 13.5 ... 16.5 mm typ. 15 mm |
| Reduction factor $r_{Al}$ | | 0.3 |
| Reduction factor $r_{Cu}$ | | 0.3 |

Release date: 2022-06-22 Date of issue: 2022-06-22 Filename: 203011_eng.pdf

## Technical Data

| | | |
|---|---|---|
| Reduction factor $r_{304}$ | | 0.7 |
| Output type | | 2-wire |
| **Nominal ratings** | | |
| Operating voltage | $U_B$ | 5 ... 60 V |
| Switching frequency | f | 0 ... 400 Hz |
| Hysteresis | H | typ. 5 % |
| Reverse polarity protection | | reverse polarity tolerant |
| Short-circuit protection | | yes |
| Voltage drop | $U_d$ | ≤ 5 V |
| Voltage drop at $I_L$ | | |
| Voltage drop $I_L$ = 100 mA, switching element on | $U_d$ | ... 5 V |
| Operating current | $I_L$ | 2 ... 200 mA |
| Off-state current | $I_r$ | 0 ... 0.5 mA |
| Switching state indicator | | 2 LED, yellow |
| **Functional safety related parameters** | | |
| $MTTF_d$ | | 1133 a |
| Mission Time ($T_M$) | | 20 a |
| Diagnostic Coverage (DC) | | 0 % |
| **Compliance with standards and directives** | | |
| Standard conformity | | |
| Standards | | EN 60947-5-2:2007<br>EN 60947-5-2/A1:2012<br>IEC 60947-5-2:2007<br>IEC 60947-5-2 AMD 1:2012 |
| **Approvals and certificates** | | |
| EAC conformity | | TR CU 020/2011 |
| UL approval | | cULus Listed, General Purpose |
| CCC approval | | Certified by China Compulsory Certification (CCC) |
| **Ambient conditions** | | |
| Ambient temperature | | -25 ... 85 °C (-13 ... 185 °F) |
| **Mechanical specifications** | | |
| Connection type | | screw terminals |
| Information for connection | | A maximum of two conductors with the same core cross section may be mounted on one terminal connection!<br>tightening torque 1.2 Nm + 10 % |
| Core cross section | | up to 2.5 $mm^2$ |
| Minimum core cross-section | | without wire end ferrule 0.5 $mm^2$ , with connector sleeves 0.34 $mm^2$ |
| Maximum core cross-section | | without wire end ferrule 2.5 $mm^2$ , with connector sleeves 1.5 $mm^2$ |
| Housing material | | PA/metal with epoxy powder coating |
| Sensing face | | PA |
| Housing base | | plastic |
| Degree of protection | | IP68 / IP69K |
| Mass | | 225 g |
| Note | | Tightening torque: 1.8 Nm (housing) |

## Connection

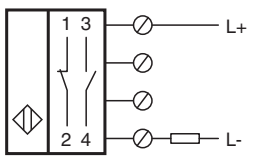


Release date: 2022-06-22 Date of issue: 2022-06-22 Filename: 203011_eng.pdf

## Accessories

| | | |
|---|---|---|
|  | **MHW 01** | Modular mounting bracket |
|  | **V1-M20-80** | Receptacles, M12/M20; plastic version |

Release date: 2022-06-22 Date of issue: 2022-06-22 Filename: 203011_eng.pdf