Electronic circuit breaker - CBM E4 24DC/0.5-10A NO-R

2905743

https://www.phoenixcontact.com/us/products/2905743

Please be informed that the data shown in this PDF document is generated from our Online Catalog. Please find the complete data in the user documentation. Our General Terms of Use for Downloads are valid.



Multi-channel, electronic circuit breaker with active current limitation for protecting four loads at 24 V DC in the event of overload and short circuit. With nominal current assistant and electronic locking of the set nominal currents. For installation on DIN rails.

Your advantages

- Easy to configure, thanks to the nominal current assistant
- Active current limitation to improve the capacity of the upstream power supply
- Adjustable in increments per channel:
  from 0.5 A to 10 A
- Easy system monitoring with early signaling and direct pickup of information at the product
- Increased system availability with intelligent detection of under- and overvoltage

Commercial Data

Item number	2905743
Packing unit	1 pc
Minimum order quantity	1 pc
Note	Made to Order (non-returnable)
Sales Key	C09
Product Key	CLA151
Catalog Page	Page 372 (C-4-2019)
GTIN	4046356992350
Weight per Piece (including packing)	290 g
Weight per Piece (excluding packing)	234.6 g
Customs tariff number	85362010
Country of origin	DE

Technical Data

Product properties

Type	DIN rail module, one-piece
Product type	Device circuit breakers
Number of positions	1
No. of channels	4

Insulation characteristics

Protection class	III
Pollution degree	2

Electrical properties

No. of channels	4

General

Operating voltage	18 V DC ... 30 V DC
Rated voltage	24 V DC
Rated current I_N	max. 40 A DC
Rated current I_N	0.5 / 1 / 2 / 4 / 6 / 10 A DC (adjustable per output channel)
Rated current (pre-adjusted)	0.5 A
Rated surge voltage	0.5 kV
Tripping method	E (electronic)
Feedback resistance	max. 35 V DC
Required backup fuse	Only required if I_{max} of the power supply > the short-circuit switching capacity. Integrated failsafe element.
Short-circuit switching capacity	300 A
Dielectric strength	max. 30 V DC (Load circuit)
Active current limitation	typ. 2.0 x I_N (0.5 - 1 A)
	typ. 1.5 x I_N (2 - 10 A)
Fuse	electronic
Efficiency	> 99 %
Closed circuit current I_0	typ. 42 mA
Power dissipation	1 W (No-load operation)
	9 W (Nominal operation)
Module initialization time	3.3 s
Waiting time after switch off of a channel	10 s (at overload / short circuit)
Measuring tolerance I	typ. 40 % (0.5 A ... 1 A)
	typ. 10 % (2 - 10 A)
Temperature derating	40 A DC (at 70°C (65°C for UL 2367))
MTBF (IEC 61709, SN 29500)	2001962 h (at 25 °C)
	1292135 h (at 40 °C)
	653352 h (at 60 °C)
Fail-safe element	15 A DC (per output channel)

Load circuit

Shutdown time	0.02 s (> 1.3 x I_N)
	30 s (1.1 ... 1.3 x I_N)
Undervoltage switch-off	≤ 17.8 V DC (active)
	≥ 19 V DC (inactive)
Overvoltage switch-off	≥ 30.5 V DC (active)
	≤ 29.5 V DC (inactive)
Max. capacitive load	75000 µF (per channel at 24 V DC)

Reset

Input voltage range	7 V DC ... 30 V DC (Reset with falling edge)
Current consumption	typ. 0.4 mA (at 24 V DC)
Pulse length	≥ 50 ms (High signal)
	≥ 50 ms (Low signal)
Voltage	< 5 V DC (Low signal)
	> 8 V DC (High signal)

Status output

Output voltage	24 V DC
Output current	max. 20 mA (when I > 80% at at least one channel)

Indicator/remote signaling

Connection name	Remote indication circuit
Switching function	N/O contact
Operating voltage	0 V DC ... 30 V DC
Operating current	1 mA DC ... 100 mA DC

Connection data

Main circuit IN+

Connection method	Push-in connection
Stripping length	18 mm
Conductor cross section solid	0.75 mm² ... 16 mm²
Conductor cross section AWG	20 ... 4
Conductor cross section, flexible, with ferrule, with plastic sleeve	0.75 mm² ... 10 mm²
Conductor cross section flexible, with ferrule without plastic sleeve	0.75 mm² ... 16 mm²

Main circuit IN-

Connection method	Push-in connection
Stripping length	10 mm
Conductor cross section solid	0.2 mm² ... 2.5 mm²
Conductor cross section AWG	24 ... 12
Conductor cross section, flexible, with ferrule, with plastic sleeve	0.25 mm² ... 1.5 mm²
Conductor cross section flexible, with ferrule without plastic sleeve	0.25 mm² ... 2.5 mm²

Main circuit OUT

Connection method	Push-in connection
Stripping length	10 mm
Conductor cross section solid	0.2 mm² ... 2.5 mm²
Conductor cross section AWG	24 ... 12
Conductor cross section, flexible, with ferrule, with plastic sleeve	0.25 mm² ... 1.5 mm²
Conductor cross section flexible, with ferrule without plastic sleeve	0.25 mm² ... 2.5 mm²

Remote indication circuit

Connection method	Push-in connection
Conductor cross section solid	0.2 mm² ... 2.5 mm²
Conductor cross section AWG	24 ... 12
Conductor cross section, flexible, with ferrule, with plastic sleeve	1.5 mm² ... 0.25 mm²
Conductor cross section flexible, with ferrule without plastic sleeve	0.25 mm² ... 2.5 mm²

LED signaling

DC OK LED off	off (No supply voltage)
DC OK LED yellow	lit (Undervoltage active, voltage ≤ 17.8 V, active channels switched off and channel LEDs are lit red)
	flashing (Undervoltage switch-off inactive, device was in undervoltage switch-off)
DC OK LED green	lit (Operating voltage in nominal range 18 ... 30 V)
DC OK LED red	lit (Overvoltage switch-off active, voltage ≥ 30.5 V, channels switched off and channel LEDs are lit red)
	flashing (Overvoltage switch-off inactive, device was in overvoltage shutdown)
Channel LED off	off (Channel switched off)
Channel LED yellow	lit (Channel switched on, channel load > 80%)
Channel LED yellow-green	flashing (Channel switched on, nominal current assistant active)
Channel LED green	lit (Channel switched on)
	flashing (Channel switched on, programming mode active)
Channel LED red	lit (Channel switched off, over- or undervoltage active)
	ON temporarily (Channel switched off, 10 s cool-down phase, overload or short-circuit release)
	flashing (Channel switched off, ready to be switched back on, overload or short-circuit release)
Channel LED red-yellow	flashing (Channel switched on, overload mode, capacity approximately 110 ... 130% , shutdown after 30 s)
Channel LED red-green	flashing (Channel switched off, programming mode active, current adjustment after overload or short-circuit release)

Dimensions

Dimensional drawing	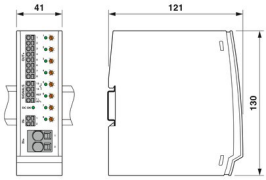
Width	41 mm
Height	130 mm
Depth	121 mm (incl. DIN rail 7.5 mm)

Material specifications

Color	light grey RAL 7035
Material	PC (Housing)
	PA 6.6 (Terminal blocks)
	PC (Light emission area)
	PBT-FR17 (Base latch)
	POM (Potentiometer axis)
Flammability rating according to UL 94	V-0

Environmental and real-life conditions

Ambient conditions

Degree of protection	IP20
Ambient temperature (operation)	-25 °C ... 70 °C (Startup at -40 C type-tested)
	-25 °C ... 65 °C (for UL 2367)
Ambient temperature (storage/transport)	-40 °C ... 80 °C
Altitude	≤ 6000 m (amsl (above mean sea level))
Humidity test	240 h, 95 % RH, 40 °C
Shock (operation)	30g (IEC 60068-2-27, Test Ea)
Vibration (operation)	5 Hz ... 24.9 Hz (Amplitude ±1.6 mm; in accordance with IEC 60068-2-6, Test Fc)
	24.9 Hz … 150 Hz (Acceleration 4g; in accordance with IEC 60068-2-6, Test Fc with additional resonance frequency testing in accordance with DNV GL)

Approval data

UL approval

Identification	UL/C-UL Listed UL 508
	UL Recognized UL 2367
	UL ANSI/ISA-12.12.01 Class I, Division 2, Groups A, B, C, D (Hazardous Location)

Shipbuilding approval

Identification	DNV GL

DNV GL data

Temperature	D
Humidity	B
Vibration	B
EMC	A
Enclosure	Required protection according to the Rules shall be provided upon installation on board

Standards and regulations

Standards/specifications	EN 61000-6-2
Standards/specifications	EN 61000-6-3
Standards/specifications	EN 60068-2-6
Standards/specifications	EN 60068-2-1
Standards/specifications	EN 60068-2-2
Standards/specifications	EN 60068-2-78

Mounting

Mounting type	DIN rail: 35 mm

Drawings

Diagram

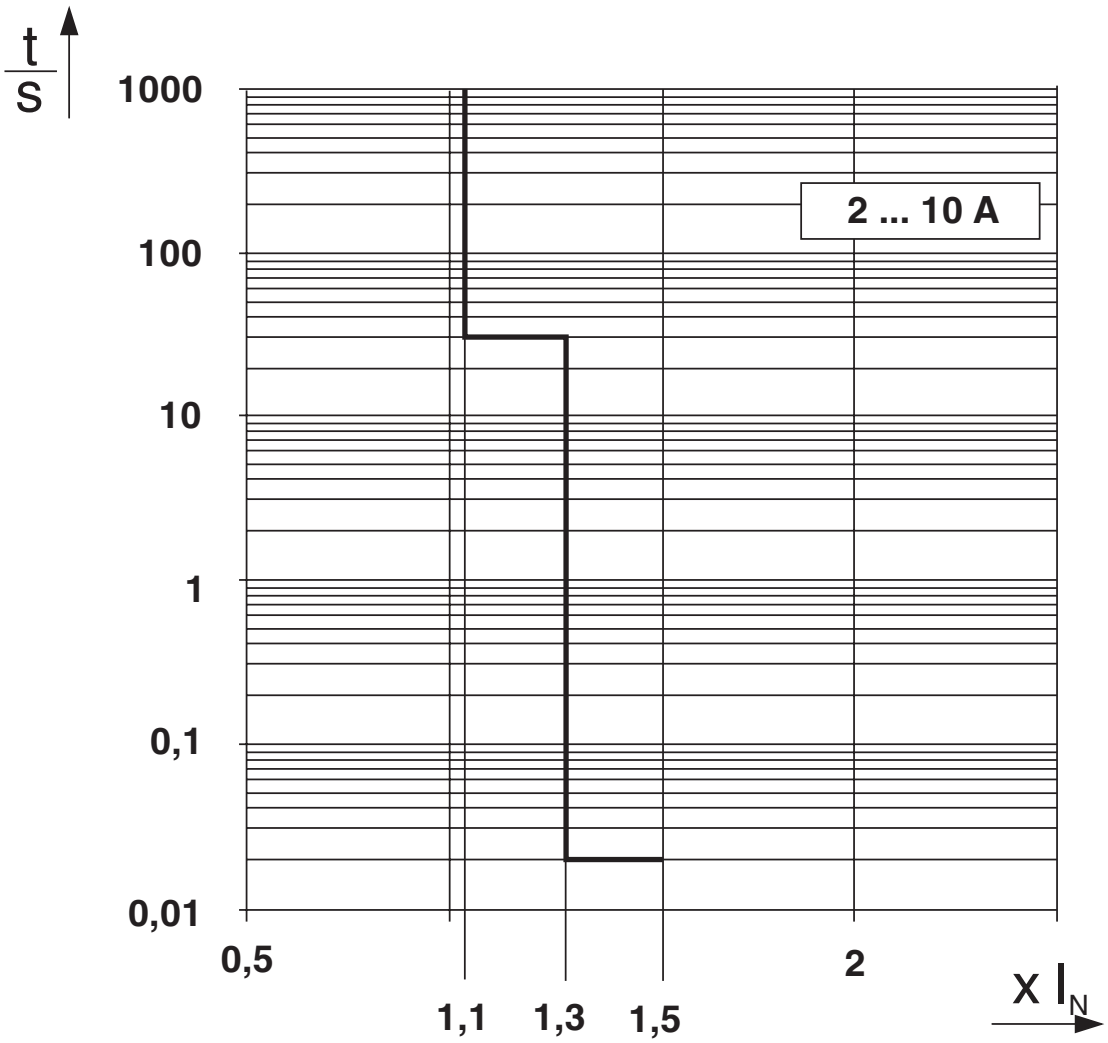

Trigger characteristic in the DC range

Dimensional drawing

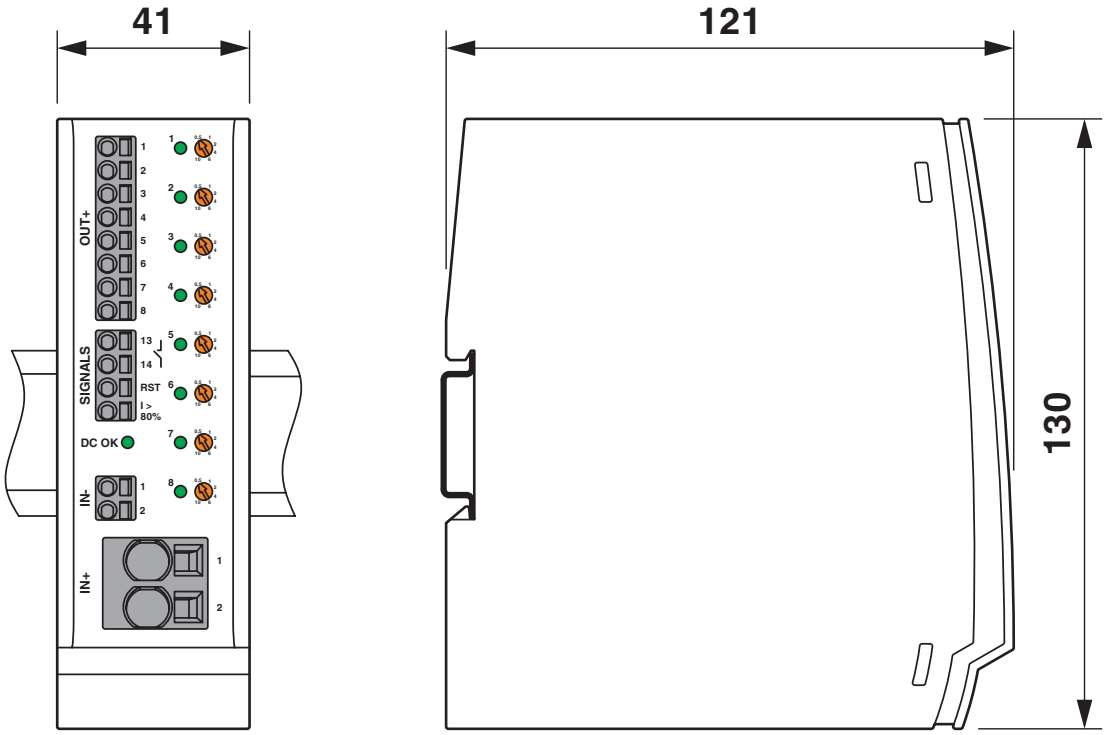

Diagram

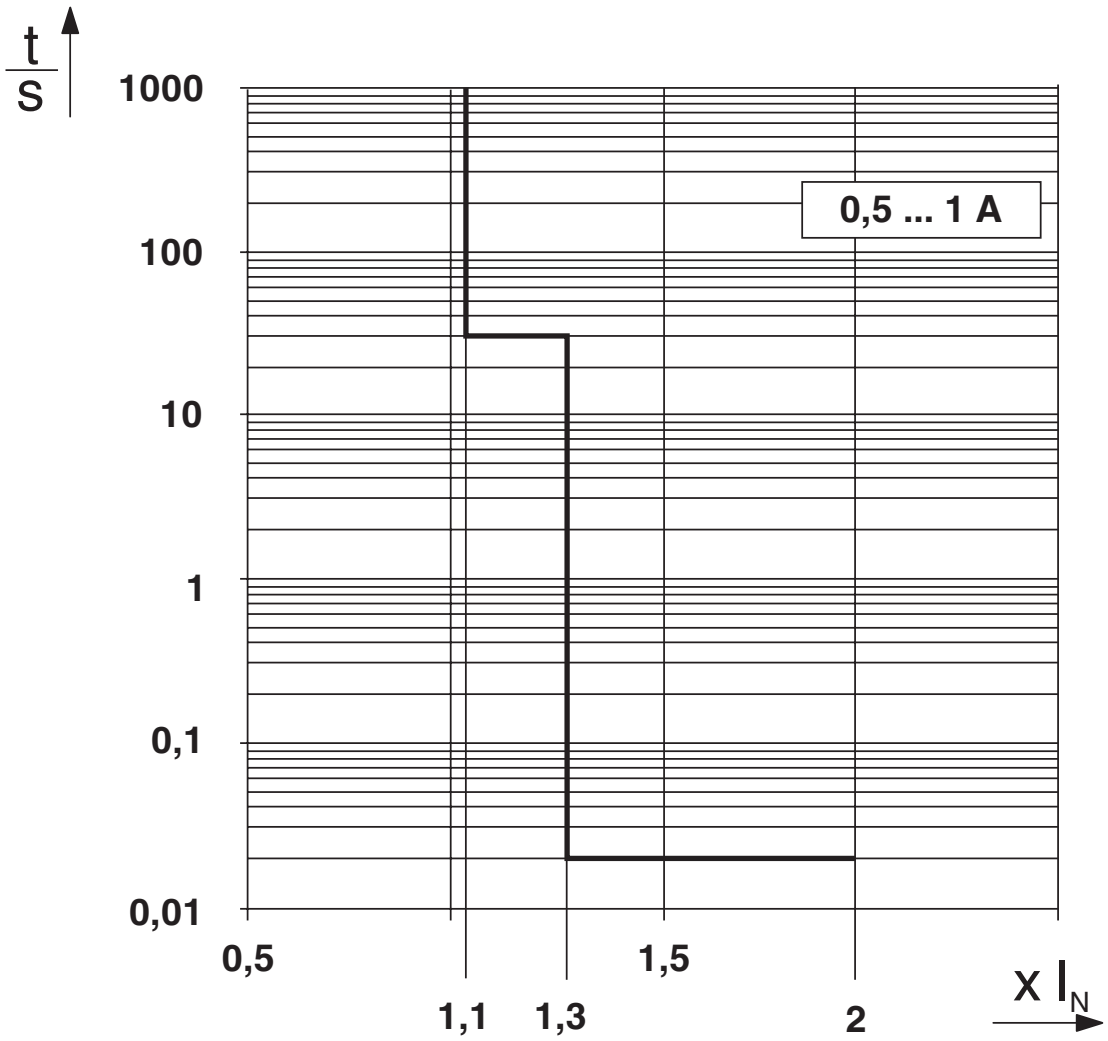

Trigger characteristic in the DC range

Application drawing

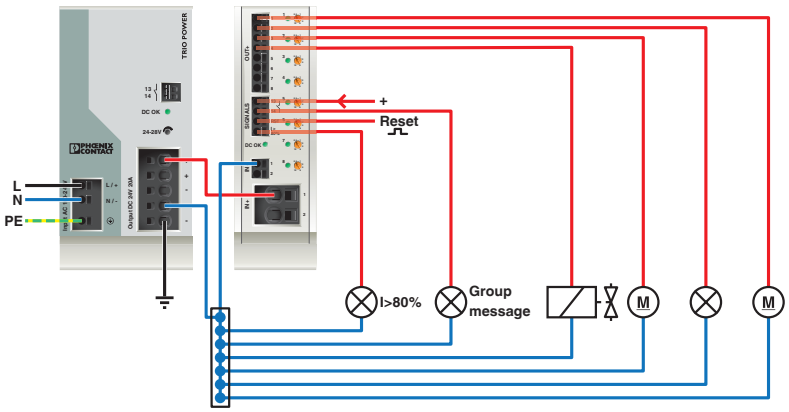

Electronic circuit breaker - CBM E4 24DC/0.5-10A NO-R

2905743

https://www.phoenixcontact.com/us/products/2905743

Approvals

UL Recognized
Approval ID: FILE E 317172

EAC
Approval ID: RU C-DE.*09.B.00169

DNV GL
Approval ID: TAA00000U2

UL Listed
Approval ID: FILE E 123528

cUL Listed
Approval ID: FILE E 123528

UL Recognized
Approval ID: FILE E 324415

cUL Listed
Approval ID: FILE E 483407

UL Listed
Approval ID: FILE E 483407

cULus Listed

cULus Listed

Classifications

ECLASS

ECLASS-9.0	27141116
ECLASS-10.0.1	27140401
ECLASS-11.0	27140401

ETIM

ETIM 8.0	EC003538

UNSPSC

UNSPSC 21.0	39121400

Environmental Product Compliance

REACh SVHC	Lead 7439-92-1

Accessories

Power supply unit

Power supply unit - TRIO-PS-2G/1AC/24DC/3/C2LPS - 2903147

https://www.phoenixcontact.com/us/products/2903147



Primary-switched TRIO POWER power supply with push-in connection for DIN rail mounting, input: 1-phase, output: 24 V DC/3 A C2LPS

Power supply unit

Power supply unit - TRIO-PS-2G/1AC/24DC/5 - 2903148

https://www.phoenixcontact.com/us/products/2903148



Primary-switched TRIO POWER power supply with push-in connection for DIN rail mounting, input: 1-phase, output: 24 V DC/5 A

Power supply unit

Power supply unit - TRIO-PS-2G/1AC/24DC/10 - 2903149

https://www.phoenixcontact.com/us/products/2903149



Primary-switched TRIO POWER power supply with push-in connection for DIN rail mounting, input: single phase, output: 24 V DC/10 A

Power supply unit

Power supply unit - TRIO-PS-2G/1AC/24DC/20 - 2903151

https://www.phoenixcontact.com/us/products/2903151



Primary-switched TRIO POWER power supply with push-in connection for DIN rail mounting, input: single-phase, output: 24 V DC/20 A

Electronic circuit breaker - CBM E4 24DC/0.5-10A NO-R

2905743

https://www.phoenixcontact.com/us/products/2905743

Power supply unit

Power supply unit - TRIO-PS-2G/3AC/24DC/5 - 2903153

https://www.phoenixcontact.com/us/products/2903153



Primary-switched TRIO POWER power supply with push-in connection for DIN rail mounting, input: 3-phase, output: 24 V DC/5 A

Power supply unit

Power supply unit - TRIO-PS-2G/3AC/24DC/10 - 2903154

https://www.phoenixcontact.com/us/products/2903154



Primary-switched TRIO POWER power supply with push-in connection for DIN rail mounting, input: 3-phase, output: 24 V DC/10 A

Electronic circuit breaker - CBM E4 24DC/0.5-10A NO-R

2905743

https://www.phoenixcontact.com/us/products/2905743

Power supply unit

Power supply unit - TRIO-PS-2G/3AC/24DC/20 - 2903155

https://www.phoenixcontact.com/us/products/2903155



Primary-switched TRIO POWER power supply with push-in connection for DIN rail mounting, input: 3-phase, output: 24 V DC/20 A

Phoenix Contact 2022 © - all rights reserved
https://www.phoenixcontact.com

Phoenix Contact USA
586 Fulling Mill Road
Middletown, PA 17057, United States
(+717) 944-1300
info@phoenixcon.com