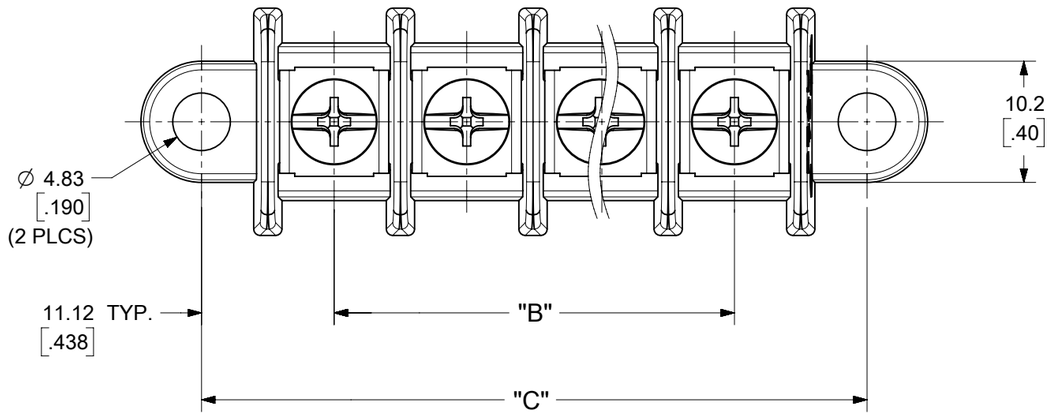

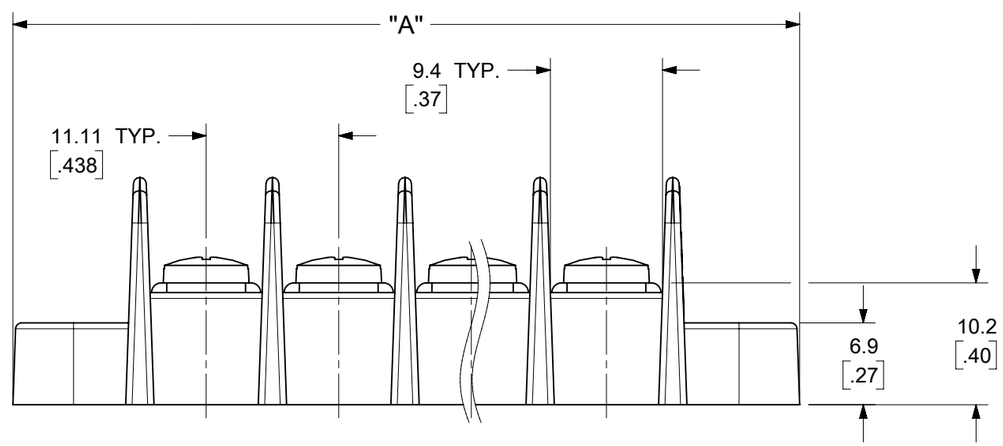

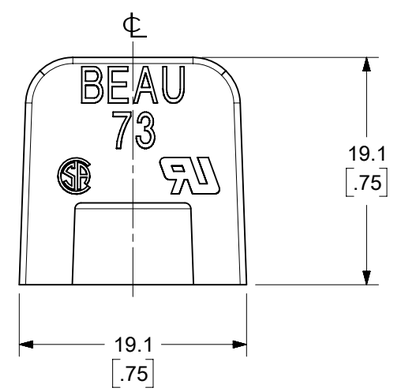

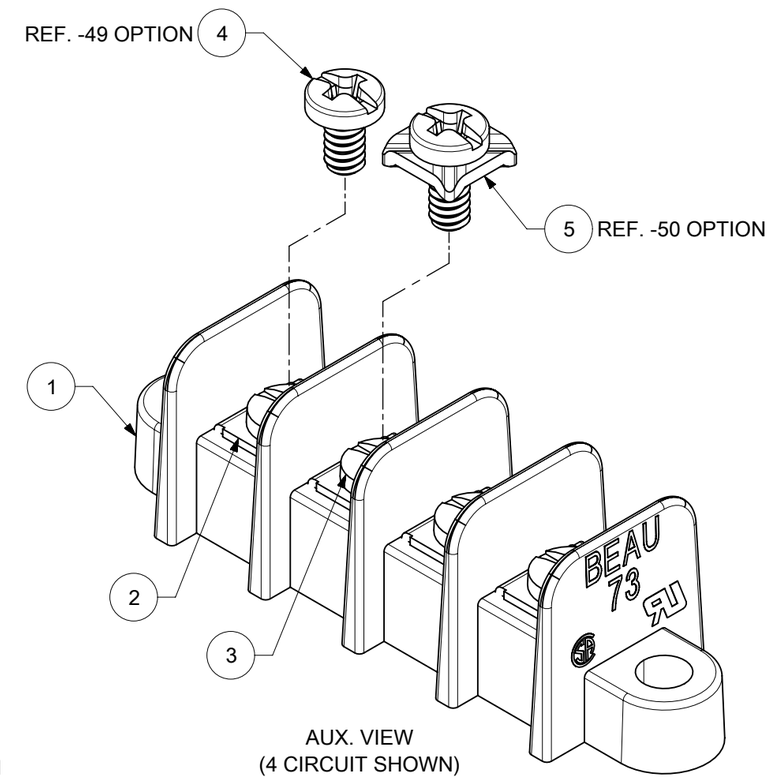

AUX. VIEW
(4 CIRCUIT SHOWN)

NOTES:
1. MATERIAL: SEE TABLE
2. FINISHES: SEE TABLE
3. PRODUCT SPECIFICATION: AS REQUIRED
4. "XX" REFERS TO THE QUANTITY OF CIRCUITS

TOLERANCES			
MM	TOL	INCH	TOL
0-6	±0.25	0-.24	±.010
>6-30	±0.40	>.24-1.18	±.016
>30-120	±0.50	>1.18-4.76	±.020
>120	±0.80	>4.76	±.031

ITEM	QTY.	DESCRIPTION	MATERIAL	FINISH
5	XX	SCREW,#6-32X.250,PAN,PH-SL W/SQ WSHR (-50 OPT)	STEEL	ZN, CLEAR CHROMATE
4	XX	SCREW,#6-32X.250,PAN,PHIL-SLOT (-49 OPT)	BRASS	NICKEL PLATE
3	XX	SCREW,#6-32X.250,BHD,PHIL-SLOT (STD)	STEEL	ZN, CLEAR CHROMATE
2	XX	TERMINAL, CLOSED BACK, 6C	BRASS	TIN PLATE
1	1	SR BTS CB MO MTG	POLYESTER (PBT)	BLACK

DOCUMENT STATUS	P1	RELEASE DATE	2022/07/15 15:03:24

FUNCTIONAL SYMBOLS: EA = 0, EC = 0, EP = 0
DIVISIONAL SYMBOLS

THIS DRAWING CONTAINS INFORMATION THAT IS PROPRIETARY TO MOLEX ELECTRONIC TECHNOLOGIES, LLC AND SHOULD NOT BE USED WITHOUT WRITTEN PERMISSION

DIMENSION UNITS: MM/INCH
SCALE: 2:1

GENERAL TOLERANCES (UNLESS SPECIFIED)

	MM	INCH
4 PLACES	± ---	± ---
3 PLACES	± ---	± SEE CHART
2 PLACES	± SEE CHART	± SEE CHART
1 PLACE	± SEE CHART	± ---
0 PLACES	± ---	± ---
ANGULAR TOL	± ---	

DRAFT WHERE APPLICABLE MUST REMAIN WITHIN DIMENSIONS

CURRENT REV DESC: MIGRATED TO NX. ADDED P/N 387300303 FOR -49 OPT. ASSY

EC NO: 712750
DRWN: ABENJAMINLW 2022/06/29
CHK'D: DACHAMMER 2022/06/29
APPR: JFMURPHY 2022/07/15

INITIAL REVISION:
DRWN: JENCINAS 2008/04/30
APPR: JMACNEIL 2008/04/30

THIRD ANGLE PROJECTION

molex

.438" SINGLE ROW PCB
BARRIER TERMINAL STRIP

PRODUCT CUSTOMER DRAWING

DOCUMENT NUMBER	DOC TYPE	DOC PART	REVISION
SD-38730-005	PSD	001	B1

DRAWING	SERIES	MATERIAL NUMBER	CUSTOMER	SHEET NUMBER
B-SIZE	38730	SEE SHEET-2	GENERAL MARKET	1 OF 2

FORMAT: Eng-lega-mp-prod-B
REVISION: E1
DATE: 2021/05/01

NO. OF CIRCUITS	DIM. "A"		DIM. "B"		DIM. "C"		MATERIAL NO. (STANDARD)	MATERIAL NO. (-49 OPTIONAL)	MATERIAL NO. (-50 OPTIONAL)
	MM	INCH	MM	INCH	MM	INCH			
2	43.51	1.713	11.12	.438	33.35	1.313	387300102	387300702	387301302
3	54.62	2.150	22.21	.874	44.50	1.752	387300103	387300303	387301303
4	65.73	2.587	33.30	1.311	55.63	2.190	387300104	387300704	387301304
5	76.84	3.024	44.39	1.748	66.75	2.628	387300105	387300705	387301305
6	87.95	3.461	55.48	2.185	77.88	3.066	387300106	387300706	387301306
7	99.06	3.898	66.58	2.622	89.00	3.504	387300107	387300707	387301307
8	110.17	4.335	77.66	3.059	100.13	3.942	387300108	387300708	387301308
9	121.28	4.772	88.75	3.496	111.25	4.380	387300109	387300709	387301309
10	132.39	5.209	99.84	3.933	122.38	4.818	387300110	387300710	387301310
11	143.50	5.646	110.94	4.370	133.50	5.256	387300111	387300711	387301311
12	154.61	6.083	122.02	4.807	144.63	5.694	387300112	387300712	387301312
13	165.72	6.520	133.12	5.244	155.75	6.132	387300113	387300713	387301313
14	176.83	6.957	144.20	5.681	166.88	6.570	387300114	387300714	387301314
15	187.94	7.394	155.30	6.118	178.00	7.008	387300115	387300715	387301315
16	199.05	7.831	166.38	6.555	189.13	7.446	387300116	387300716	387301316
17	210.16	8.268	177.48	6.992	200.25	7.884	387300117	387300717	387301317
18	221.27	8.705	188.56	7.429	211.38	8.322	387300118	387300718	387301318
19	232.38	9.142	199.65	7.866	222.50	8.760	387300119	387300719	387301319
20	243.49	9.579	210.74	8.303	233.63	9.198	387300120	387300720	387301320
21	254.60	10.016	221.84	8.740	244.75	9.636	387300121	387300721	387301321
22	265.71	10.453	232.92	9.177	255.88	10.074	387300122	387300722	387301322
23	276.82	10.890	244.02	9.614	267.00	10.512	387300123	387300723	387301323
24	287.93	11.327	255.10	10.051	278.13	10.950	387300124	387300724	387301324
25	299.04	11.764	266.20	10.488	289.26	11.388	387300125	387300725	387301325
26	310.15	12.201	277.49	10.925	300.38	11.826	387300126	387300726	387301326

B1

TOLERANCES			
MM	TOL	INCH	TOL
0-6	±0.25	0-.24	±.010
>6-30	±0.40	>.24-1.18	±.016
>30-120	±0.50	>1.18-4.76	±.020
>120	±0.80	>4.76	±.031

FUNCTIONAL SYMBOLS
EA = 0
EC = 0
EP = 0
DIVISIONAL SYMBOLS

THIS DRAWING CONTAINS INFORMATION THAT IS PROPRIETARY TO MOLEX ELECTRONIC TECHNOLOGIES, LLC AND SHOULD NOT BE USED WITHOUT WRITTEN PERMISSION

DIMENSION UNITS: MM/INCH
SCALE: 1:1

GENERAL TOLERANCES (UNLESS SPECIFIED)

	MM	INCH
4 PLACES	± ---	± ---
3 PLACES	± ---	± SEE CHART
2 PLACES	± SEE CHART	± SEE CHART
1 PLACE	± SEE CHART	± ---
0 PLACES	± ---	± ---
ANGULAR TOL	± ---	

DRAFT WHERE APPLICABLE MUST REMAIN WITHIN DIMENSIONS

CURRENT REV DESC: MIGRATED TO NX. ADDED P/N 387300303 FOR -49 OPT. ASSY

EC NO: 712750
DRWN: ABENJAMINLW 2022/06/29
CHK'D: DACHAMMER 2022/06/29
APPR: JFMURPHY 2022/07/15

INITIAL REVISION:
DRWN: JENCINAS 2008/04/30
APPR: JMACNEIL 2008/04/30

THIRD ANGLE PROJECTION | DRAWING: B-SIZE | SERIES: 38730

molex

.438" SINGLE ROW PCB
BARRIER TERMINAL STRIP

PRODUCT CUSTOMER DRAWING

DOCUMENT NUMBER	DOC TYPE	DOC PART	REVISION
SD-38730-005	PSD	001	B1

MATERIAL NUMBER	CUSTOMER	SHEET NUMBER
SEE CHART	GENERAL MARKET	2 OF 2

DOCUMENT STATUS	P1	RELEASE DATE	2022/07/15 15:03:24

FORMAT: Eng-lega-mp-prod-B
REVISION: E1
DATE: 2021/05/01