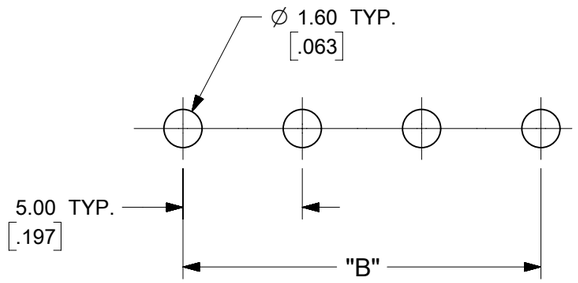

PCB LAYOUT

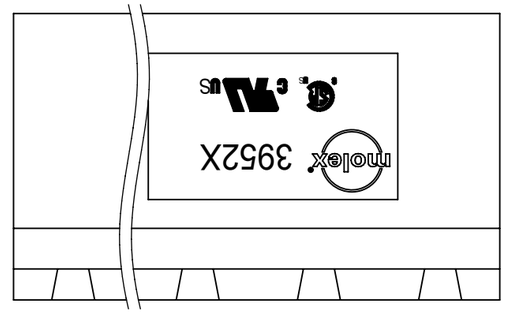

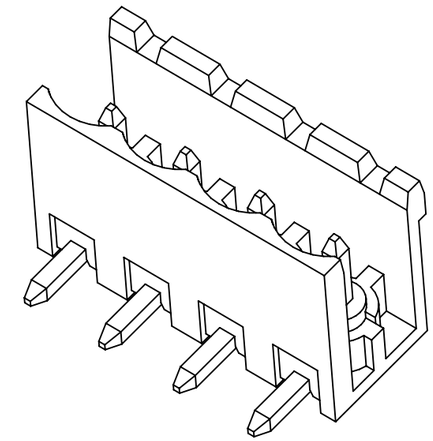

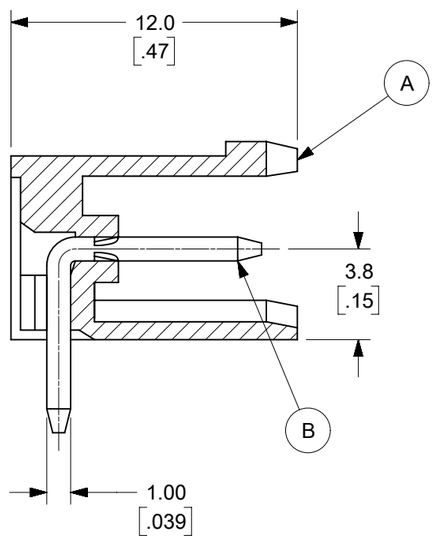

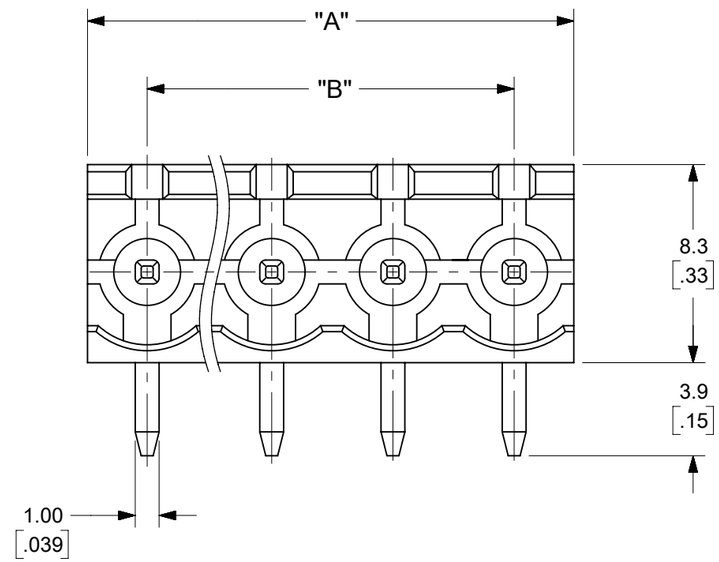

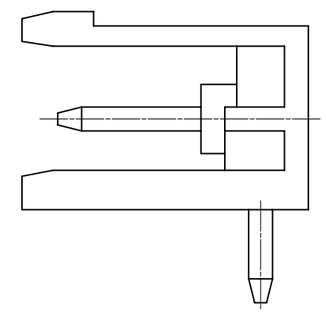

SPECIFICATIONS:

1. MATERIAL:
   (A). BODY: PA66
   (B). PIN: BRASS
2. WIRE RANGE: N/A
3. ELECTRICAL RATING: 300V, 15A.
4. WIRE STRIP LENGTH: N/A.
5. OPERATING TEMPERATURE: -40°C to +105°C.
6. MAX TORQUE: N/A.
7. INSULATION RESISTANCE: DC 500V, 500M.
8. DIELECTRIC WITHSTAND: AC 2500V FOR 1 MINUTE.
9. BREAKDOWN VOLTAGE : 4000V.
10. A = (N x P)
11. B = (N - 1) x P
12. P (PITCH) = 5.0MM (.197").
13. N = NUMBER OF POSITIONS AVAILABLE 2 THROUGH 24.

TOLERANCES			
MM	TOL	INCH	TOL
0-6	±0.25	0-.24	±.010
>6-30	±0.40	.24-1.18	±.016
>30-120	±0.50	1.18-4.76	±.020
>120	±0.80	>4.76	±.031

SYMBOLS: = 0 / = 0 / = 0 / = 0 / = 0 / = 0 / = 0 / = 0 / = 0

THIS DRAWING CONTAINS INFORMATION THAT IS PROPRIETARY TO MOLEX ELECTRONIC TECHNOLOGIES, LLC AND SHOULD NOT BE USED WITHOUT WRITTEN PERMISSION

DIMENSION UNITS: MM/INCH — SCALE: 4:1

GENERAL TOLERANCES (UNLESS SPECIFIED)

	MM	INCH
4 PLACES	±	±
3 PLACES	±	± SEE CHART
2 PLACES	± SEE CHART	± SEE CHART
1 PLACE	± SEE CHART	±
0 PLACES	±	±
ANGULAR TOL	± °	

DRAFT WHERE APPLICABLE MUST REMAIN WITHIN DIMENSIONS

CURRENT REV DESC: MIGRATION TO ECTR/NX

EC NO: 619931
DRWN: DSOPPIN 2019/06/20
CHK'D: DACHAMMER 2019/07/01
APPR: JFMURPHY 2019/07/08

INITIAL REVISION:
DRWN: L.ROTHAUS 2005/06/12
APPR: C.YORK 2006/06/01

THIRD ANGLE PROJECTION — DRAWING: B-SIZE — SERIES: 39522

molex

5.0MM, EURO HEADER, RIGHT ANGLE, OPEN END

PRODUCT CUSTOMER DRAWING

DOCUMENT NUMBER	DOC TYPE	DOC PART	REVISION
SD-39522-003	PSD	001	A2

MATERIAL NUMBER	CUSTOMER	SHEET NUMBER
SEE SHEET-2	GENERAL MARKET	1 OF 2

DOCUMENT STATUS	P1	RELEASE DATE	2019/07/08 15:51:10

FORMAT: Eng-legacy-prod-B
REVISION: D
DATE: 2018/01/18

		MATERIAL NUMBERS												DIMENSIONAL INFORMATION			
		BLACK						GREEN									
		100% TIN			30 u" GOLD			100% TIN			30 u" GOLD						
	CIRCUIT SIZE	PRINTING OPTIONS			PRINTING OPTIONS			PRINTING OPTIONS			PRINTING OPTIONS			DIM. "A"		DIM. "B"	
DESCRIPTION		None	10AV	11AV	None	10AV	11AV	None	10AV	11AV	None	10AV	11AV	mm	inch	mm	inch
5.0 MM, EURO HEADER, RIGHT ANGLE, OPEN END	2	395220002	395220102	395220202	395220502	395220602	395220702	395225002	395225102	395225202	395225502	395225602	395225702	10.00	.394	5.00	.197
5.0 MM, EURO HEADER, RIGHT ANGLE, OPEN END	3	395220003	395220103	395220203	395220503	395220603	395220703	395225003	395225103	395225203	395225503	395225603	395225703	15.00	.591	10.00	.394
5.0 MM, EURO HEADER, RIGHT ANGLE, OPEN END	4	395220004	395220104	395220204	395220504	395220604	395220704	395225004	395225104	395225204	395225504	395225604	395225704	20.00	.787	15.00	.591
5.0 MM, EURO HEADER, RIGHT ANGLE, OPEN END	5	395220005	395220105	395220205	395220505	395220605	395220705	395225005	395225105	395225205	395225505	395225605	395225705	25.00	.984	20.00	.787
5.0 MM, EURO HEADER, RIGHT ANGLE, OPEN END	6	395220006	395220106	395220206	395220506	395220606	395220706	395225006	395225106	395225206	395225506	395225606	395225706	30.00	1.181	25.00	.984
5.0 MM, EURO HEADER, RIGHT ANGLE, OPEN END	7	395220007	395220107	395220207	395220507	395220607	395220707	395225007	395225107	395225207	395225507	395225607	395225707	35.00	1.378	30.00	1.181
5.0 MM, EURO HEADER, RIGHT ANGLE, OPEN END	8	395220008	395220108	395220208	395220508	395220608	395220708	395225008	395225108	395225208	395225508	395225608	395225708	40.00	1.575	35.00	1.378
5.0 MM, EURO HEADER, RIGHT ANGLE, OPEN END	9	395220009	395220109	395220209	395220509	395220609	395220709	395225009	395225109	395225209	395225509	395225609	395225709	45.00	1.772	40.00	1.575
5.0 MM, EURO HEADER, RIGHT ANGLE, OPEN END	10	395220010	395220110	395220210	395220510	395220610	395220710	395225010	395225110	395225210	395225510	395225610	395225710	50.00	1.969	45.00	1.772
5.0 MM, EURO HEADER, RIGHT ANGLE, OPEN END	11	395220011	395220111	395220211	395220511	395220611	395220711	395225011	395225111	395225211	395225511	395225611	395225711	55.00	2.165	50.00	1.969
5.0 MM, EURO HEADER, RIGHT ANGLE, OPEN END	12	395220012	395220112	395220212	395220512	395220612	395220712	395225012	395225112	395225212	395225512	395225612	395225712	60.00	2.362	55.00	2.165
5.0 MM, EURO HEADER, RIGHT ANGLE, OPEN END	13	395220013	395220113	395220213	395220513	395220613	395220713	395225013	395225113	395225213	395225513	395225613	395225713	65.00	2.559	60.00	2.362
5.0 MM, EURO HEADER, RIGHT ANGLE, OPEN END	14	395220014	395220114	395220214	395220514	395220614	395220714	395225014	395225114	395225214	395225514	395225614	395225714	70.00	2.756	65.00	2.559
5.0 MM, EURO HEADER, RIGHT ANGLE, OPEN END	15	395220015	395220115	395220215	395220515	395220615	395220715	395225015	395225115	395225215	395225515	395225615	395225715	75.00	2.953	70.00	2.756
5.0 MM, EURO HEADER, RIGHT ANGLE, OPEN END	16	395220016	395220116	395220216	395220516	395220616	395220716	395225016	395225116	395225216	395225516	395225616	395225716	80.00	3.150	75.00	2.953
5.0 MM, EURO HEADER, RIGHT ANGLE, OPEN END	17	395220017	395220117	395220217	395220517	395220617	395220717	395225017	395225117	395225217	395225517	395225617	395225717	85.00	3.346	80.00	3.150
5.0 MM, EURO HEADER, RIGHT ANGLE, OPEN END	18	395220018	395220118	395220218	395220518	395220618	395220718	395225018	395225118	395225218	395225518	395225618	395225718	90.00	3.543	85.00	3.346
5.0 MM, EURO HEADER, RIGHT ANGLE, OPEN END	19	395220019	395220119	395220219	395220519	395220619	395220719	395225019	395225119	395225219	395225519	395225619	395225719	95.00	3.740	90.00	3.543
5.0 MM, EURO HEADER, RIGHT ANGLE, OPEN END	20	395220020	395220120	395220220	395220520	395220620	395220720	395225020	395225120	395225220	395225520	395225620	395225720	100.00	3.937	95.00	3.740
5.0 MM, EURO HEADER, RIGHT ANGLE, OPEN END	21	395220021	395220121	395220221	395220521	395220621	395220721	395225021	395225121	395225221	395225521	395225621	395225721	105.00	4.134	100.00	3.937
5.0 MM, EURO HEADER, RIGHT ANGLE, OPEN END	22	395220022	395220122	395220222	395220522	395220622	395220722	395225022	395225122	395225222	395225522	395225622	395225722	110.00	4.331	105.00	4.134
5.0 MM, EURO HEADER, RIGHT ANGLE, OPEN END	23	395220023	395220123	395220223	395220523	395220623	395220723	395225023	395225123	395225223	395225523	395225623	395225723	115.00	4.528	110.00	4.331
5.0 MM, EURO HEADER, RIGHT ANGLE, OPEN END	24	395220024	395220124	395220224	395220524	395220624	395220724	395225024	395225124	395225224	395225524	395225624	395225724	120.00	4.724	115.00	4.528

TOLERANCES			
MM	TOL	INCH	TOL
0-6	±0.25	0-.24	±.010
>6-30	±0.40	.24-1.18	±.016
>30-120	±0.50	1.18-4.76	±.020
>120	±0.80	>4.76	±.031

SYMBOLS

= 0
= 0
= 0
= 0
= 0
= 0
= 0
= 0
= 0

THIS DRAWING CONTAINS INFORMATION THAT IS PROPRIETARY TO MOLEX ELECTRONIC TECHNOLOGIES, LLC AND SHOULD NOT BE USED WITHOUT WRITTEN PERMISSION

DIMENSION UNITS: MM/INCH
SCALE: 2:1

GENERAL TOLERANCES (UNLESS SPECIFIED)

	MM	INCH
4 PLACES	±	±
3 PLACES	±	± SEE CHART
2 PLACES	± SEE CHART	± SEE CHART
1 PLACE	± SEE CHART	±
0 PLACES	±	±
ANGULAR TOL	± °	

DRAFT WHERE APPLICABLE MUST REMAIN WITHIN DIMENSIONS

CURRENT REV DESC: MIGRATION TO ECTR/NX

EC NO: 619931
DRWN: DSOPPIN 2019/06/20
CHK'D: DACHAMMER 2019/07/01
APPR: JFMURPHY 2019/07/08

INITIAL REVISION:
DRWN: LROTHAUS 2006/01/09
APPR: JPAWLICK 2006/01/10

THIRD ANGLE PROJECTION | DRAWING: B-SIZE | SERIES: 39522

molex

5.0MM, EURO HEADER, RIGHT ANGLE, OPEN END

PRODUCT CUSTOMER DRAWING

DOCUMENT NUMBER	DOC TYPE	DOC PART	REVISION
SD-39522-003	PSD	001	A2

MATERIAL NUMBER	CUSTOMER	SHEET NUMBER
SEE TABLE	GENERAL MARKET	2 OF 2

DOCUMENT STATUS	P1	RELEASE DATE	2019/07/08 15:51:10

FORMAT: Eng-lega-master-tb-prod-B
REVISION: D
DATE: 2018/01/18