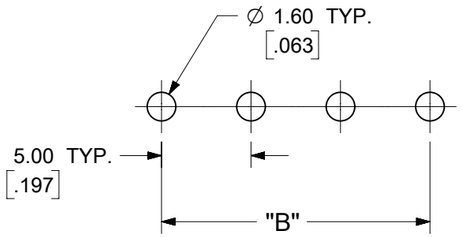

PCB LAYOUT (A2)

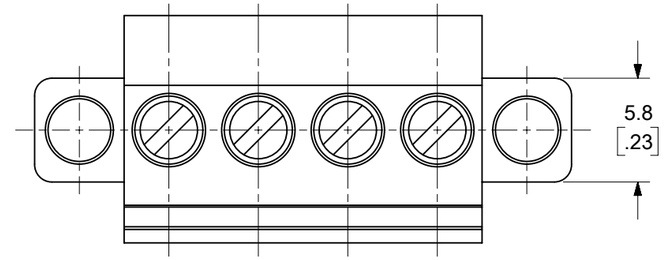

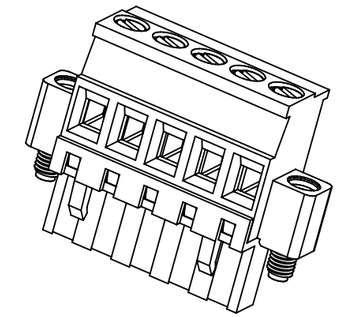

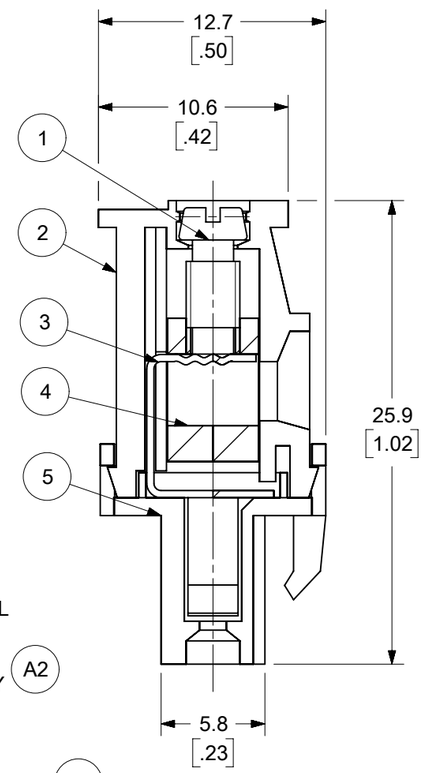

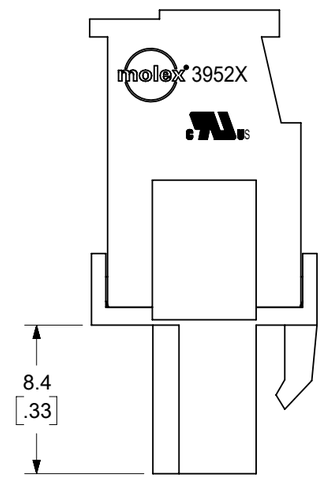

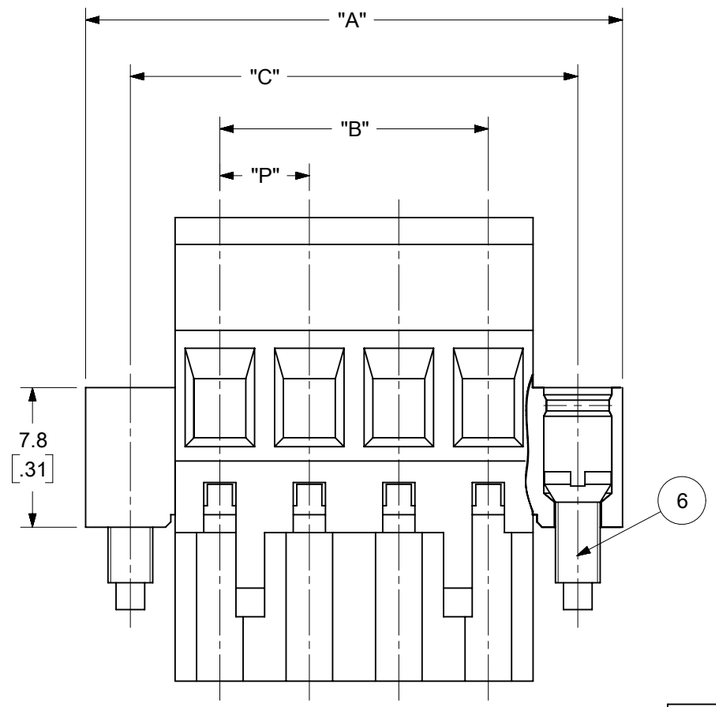

SPECIFICATIONS:

1. MATERIAL:
   (1). M3 CLAMP SCREW: ZINC PLATED STEEL
   (2). BODY: PA66, UL94-V0
   (3). TERMINAL: TIN PLATED COPPER ALLOY (A2)
   (4). CAGE: NICKEL PLATED BRASS
   (5). COVER: PA66, UL94-V0
   (6). M3 MOUNTING SCREW: ZINC PLATED STEEL (A2)
2. WIRE RANGE: 12-30AWG (A2)
3. ELECTRICAL RATING: 300V, 18A PER UL (A2)
4. WIRE STRIP LENGTH: 5.0mm
5. OPERATING TEMPERATURE: -40°C to +105°C.
6. MAX TORQUE: 5 IN-LBS. (A2)
7. INSULATION RESISTANCE: DC 500V, 500MΩ.
8. DIELECTRIC WITHSTAND: AC 2500V FOR 1 MINUTE.
9. BREAKDOWN VOLTAGE : 4000V.
10. CONTACT RESISTANCE: <10 milliohms

TOLERANCES			
MM	TOL	INCH	TOL
0-6	±0.25	0-.24	±.010
>6-30	±0.40	>.24-1.18	±.016
>30-120	±0.50	>1.18-4.76	±.020
>120	±0.80	>4.76	±.031

THIS DRAWING CONTAINS INFORMATION THAT IS PROPRIETARY TO MOLEX ELECTRONIC TECHNOLOGIES, LLC AND SHOULD NOT BE USED WITHOUT WRITTEN PERMISSION

FUNCTIONAL SYMBOLS: E/A = 0; E/C = 0; E/P = 0
DIVISIONAL SYMBOLS

DIMENSION UNITS: MM/INCH
SCALE: 3:1

GENERAL TOLERANCES (UNLESS SPECIFIED)

	MM	INCH
4 PLACES	± ---	± ---
3 PLACES	± ---	± SEE CHART
2 PLACES	± SEE CHART	± SEE CHART
1 PLACE	± SEE CHART	± ---
0 PLACES	± ---	± ---
ANGULAR TOL	± ---	

DRAFT WHERE APPLICABLE MUST REMAIN WITHIN DIMENSIONS

CURRENT REV DESC: MIGRATED TO ECTR/NX. REAR ENTRY CHANGED TO FRONT WIRE ENTRY IN TITLE BLOCK. ADDED PCB LAYOUT. MODIFIED NOTES.REMOVED CSA LOGO

EC NO: 719296
DRWN: ABENJAMINLW 2021/07/12
CHK'D: DACHAMMER 2022/08/25
APPR: JFMURPHY 2022/09/23

INITIAL REVISION:
DRWN: CYORK 2006/03/23
APPR: RDEROSS 2006/03/24

THIRD ANGLE PROJECTION | DRAWING: B-SIZE | SERIES: 39527

molex

5.0MM, EURO PLUG, VERTICAL, FRONT WIRE WITH MOUNTING ENDS

PRODUCT CUSTOMER DRAWING

DOCUMENT NUMBER	DOC TYPE	DOC PART	REVISION
SD-39527-001	PSD	001	A2

MATERIAL NUMBER	CUSTOMER	SHEET NUMBER
SEE SHEET-2	GENERAL MARKET	1 OF 2

DOCUMENT STATUS	P1	RELEASE DATE	2022/09/23 15:39:10

FORMAT: Eng-lega-master-tb-prod-B
REVISION: E
DATE: 2020/01/14

		MATERIAL NUMBERS												DIMENSIONAL INFORMATION					
		BLACK						GREEN											
		100% TIN			30 u" GOLD			100% TIN			30 u" GOLD								
	CIRCUIT SIZE	PRINTING OPTIONS			PRINTING OPTIONS			PRINTING OPTIONS			PRINTING OPTIONS			DIM. "A"		DIM. "B"		DIM. "C"	
DESCRIPTION		None	10AV	11AV	None	10AV	11AV	None	10AV	11AV	None	10AV	11AV	mm	inch	mm	inch	mm	inch
5.0MM, EURO PLUG, VERTICAL FWE, MOUNTING ENDS	2	395273002	395273302	395273402	395273502	395273802	395273902	395278002	395278302	395278402	395278502	395278802	395278902	20.0	.79	5.0	.20	15.0	.59
5.0MM, EURO PLUG, VERTICAL FWE, MOUNTING ENDS	3	395273003	395273303	395273403	395273503	395273803	395273903	395278003	395278303	395278403	395278503	395278803	395278903	25.0	.98	10.0	.39	20.0	.79
5.0MM, EURO PLUG, VERTICAL FWE, MOUNTING ENDS	4	395273004	395273304	395273404	395273504	395273804	395273904	395278004	395278304	395278404	395278504	395278804	395278904	30.0	1.18	15.0	.59	25.0	.98
5.0MM, EURO PLUG, VERTICAL FWE, MOUNTING ENDS	5	395273005	395273305	395273405	395273505	395273805	395273905	395278005	395278305	395278405	395278505	395278805	395278905	35.0	1.38	20.0	.79	30.0	1.18
5.0MM, EURO PLUG, VERTICAL FWE, MOUNTING ENDS	6	395273006	395273306	395273406	395273506	395273806	395273906	395278006	395278306	395278406	395278506	395278806	395278906	40.0	1.58	25.0	.98	35.0	1.38
5.0MM, EURO PLUG, VERTICAL FWE, MOUNTING ENDS	7	395273007	395273307	395273407	395273507	395273807	395273907	395278007	395278307	395278407	395278507	395278807	395278907	45.0	1.77	30.0	1.18	40.0	1.58
5.0MM, EURO PLUG, VERTICAL FWE, MOUNTING ENDS	8	395273008	395273308	395273408	395273508	395273808	395273908	395278008	395278308	395278408	395278508	395278808	395278908	50.0	1.97	35.0	1.38	45.0	1.77
5.0MM, EURO PLUG, VERTICAL FWE, MOUNTING ENDS	9	395273009	395273309	395273409	395273509	395273809	395273909	395278009	395278309	395278409	395278509	395278809	395278909	55.0	2.17	40.0	1.58	50.0	1.97
5.0MM, EURO PLUG, VERTICAL FWE, MOUNTING ENDS	10	395273010	395273310	395273410	395273510	395273810	395273910	395278010	395278310	395278410	395278510	395278810	395278910	60.0	2.36	45.0	1.77	55.0	2.17
5.0MM, EURO PLUG, VERTICAL FWE, MOUNTING ENDS	11	395273011	395273311	395273411	395273511	395273811	395273911	395278011	395278311	395278411	395278511	395278811	395278911	65.0	2.56	50.0	1.97	60.0	2.36
5.0MM, EURO PLUG, VERTICAL FWE, MOUNTING ENDS	12	395273012	395273312	395273412	395273512	395273812	395273912	395278012	395278312	395278412	395278512	395278812	395278912	70.0	2.76	55.0	2.17	65.0	2.56
5.0MM, EURO PLUG, VERTICAL FWE, MOUNTING ENDS	13	395273013	395273313	395273413	395273513	395273813	395273913	395278013	395278313	395278413	395278513	395278813	395278913	75.0	2.95	60.0	2.36	70.0	2.76
5.0MM, EURO PLUG, VERTICAL FWE, MOUNTING ENDS	14	395273014	395273314	395273414	395273514	395273814	395273914	395278014	395278314	395278414	395278514	395278814	395278914	80.0	3.15	65.0	2.56	75.0	2.95
5.0MM, EURO PLUG, VERTICAL FWE, MOUNTING ENDS	15	395273015	395273315	395273415	395273515	395273815	395273915	395278015	395278315	395278415	395278515	395278815	395278915	85.0	3.35	70.0	2.76	80.0	3.15
5.0MM, EURO PLUG, VERTICAL FWE, MOUNTING ENDS	16	395273016	395273316	395273416	395273516	395273816	395273916	395278016	395278316	395278416	395278516	395278816	395278916	90.0	3.54	75.0	2.95	85.0	3.35
5.0MM, EURO PLUG, VERTICAL FWE, MOUNTING ENDS	17	395273017	395273317	395273417	395273517	395273817	395273917	395278017	395278317	395278417	395278517	395278817	395278917	95.0	3.74	80.0	3.15	90.0	3.54
5.0MM, EURO PLUG, VERTICAL FWE, MOUNTING ENDS	18	395273018	395273318	395273418	395273518	395273818	395273918	395278018	395278318	395278418	395278518	395278818	395278918	100.0	3.94	85.0	3.35	95.0	3.74
5.0MM, EURO PLUG, VERTICAL FWE, MOUNTING ENDS	19	395273019	395273319	395273419	395273519	395273819	395273919	395278019	395278319	395278419	395278519	395278819	395278919	105.0	4.13	90.0	3.54	100.0	3.94
5.0MM, EURO PLUG, VERTICAL FWE, MOUNTING ENDS	20	395273020	395273320	395273420	395273520	395273820	395273920	395278020	395278320	395278420	395278520	395278820	395278920	110.0	4.33	95.0	3.74	105.0	4.13
5.0MM, EURO PLUG, VERTICAL FWE, MOUNTING ENDS	21	395273021	395273321	395273421	395273521	395273821	395273921	395278021	395278321	395278421	395278521	395278821	395278921	115.0	4.53	100.0	3.94	110.0	4.33
5.0MM, EURO PLUG, VERTICAL FWE, MOUNTING ENDS	22	395273022	395273322	395273422	395273522	395273822	395273922	395278022	395278322	395278422	395278522	395278822	395278922	120.0	4.72	105.0	4.13	115.0	4.53
5.0MM, EURO PLUG, VERTICAL FWE, MOUNTING ENDS	23	395273023	395273323	395273423	395273523	395273823	395273923	395278023	395278323	395278423	395278523	395278823	395278923	125.0	4.92	110.0	4.33	120.0	4.72
5.0MM, EURO PLUG, VERTICAL FWE, MOUNTING ENDS	24	395273024	395273324	395273424	395273524	395273824	395273924	395278024	395278324	395278424	395278524	395278824	395278924	130.0	5.12	115.0	4.53	125.0	4.92

A2

TOLERANCES			
MM	TOL	INCH	TOL
0-6	±0.25	0-.24	±.010
>6-30	±0.40	.24-1.18	±.016
>30-120	±0.50	1.18-4.76	±.020
>120	±0.80	>4.76	±.031

FUNCTIONAL SYMBOLS: E/A = 0; E/C = 0; E/P = 0

DIVISIONAL SYMBOLS

THIS DRAWING CONTAINS INFORMATION THAT IS PROPRIETARY TO MOLEX ELECTRONIC TECHNOLOGIES, LLC AND SHOULD NOT BE USED WITHOUT WRITTEN PERMISSION

DIMENSION UNITS: MM/INCH
SCALE: 3:1

GENERAL TOLERANCES (UNLESS SPECIFIED)

	MM	INCH
4 PLACES	± ---	± ---
3 PLACES	± ---	± SEE CHART
2 PLACES	± SEE CHART	± SEE CHART
1 PLACE	± SEE CHART	± ---
0 PLACES	± ---	±
ANGULAR TOL	± ---	

DRAFT WHERE APPLICABLE MUST REMAIN WITHIN DIMENSIONS

CURRENT REV DESC: MIGRATED TO ECTR/NX. REAR ENTRY CHANGED TO FRONT WIRE ENTRY IN TITLE BLOCK. ADDED PCB LAYOUT. MODIFIED NOTES.REMOVED CSA LOGO

EC NO: 719296
DRWN: ABENJAMINLW 2021/07/12
CHK'D: DACHAMMER 2022/08/25
APPR: JFMURPHY 2022/09/23

INITIAL REVISION:
DRWN: CYORK 2006/03/23
APPR: RDEROSS 2006/03/24

THIRD ANGLE PROJECTION | DRAWING: B-SIZE | SERIES: 39527

molex

5.0MM, EURO PLUG, VERTICAL, FRONT WIRE WITH MOUNTING ENDS

PRODUCT CUSTOMER DRAWING

DOCUMENT NUMBER	DOC TYPE	DOC PART	REVISION
SD-39527-001	PSD	001	A2

MATERIAL NUMBER	CUSTOMER	SHEET NUMBER
SEE CHART	GENERAL MARKET	2 OF 2

DOCUMENT STATUS	P1	RELEASE DATE	2022/09/23 15:39:10

FORMAT: Eng-lega-master-tb-prod-B
REVISION: E
DATE: 2020/01/14