HIGH-SPEED 4K x 8 FourPort™ STATIC RAM

7054L

Features

- **High-speed access**
  - *Commercial: 20ns (max.)*
- **Low-power operation**
  - *IDT7054L*
    Active: 750mW (typ.)
    Standby: 1.5mW (typ.)
- **True FourPort memory cells which allow simultaneous access of the same memory locations**
- **Fully asynchronous operation from each of the four ports: P1, P2, P3, and P4**
- **TTL-compatible; single 5V (±10%) power supply**
- **Available in 128 pin Thin Quad Flatpack package**

Description

The IDT7054 is a high-speed 4K x 8 FourPort™ Static RAM designed to be used in systems where multiple access into a common RAM is required. This FourPort Static RAM offers increased system performance in multiprocessor systems that have a need to communicate in real time and also offers added benefit for high-speed systems in which multiple access is required in the same cycle.

The IDT7054 is also designed to be used in systems where on-chip hardware port arbitration is not needed. This part lends itself to those systems which cannot tolerate wait states or are designed to be able to externally arbitrated or withstand contention when all ports simultaneously access the same FourPort RAM location.

The IDT7054 provides four independent ports with separate control, address, and I/O pins that permit independent, asynchronous access for

Functional Block Diagram

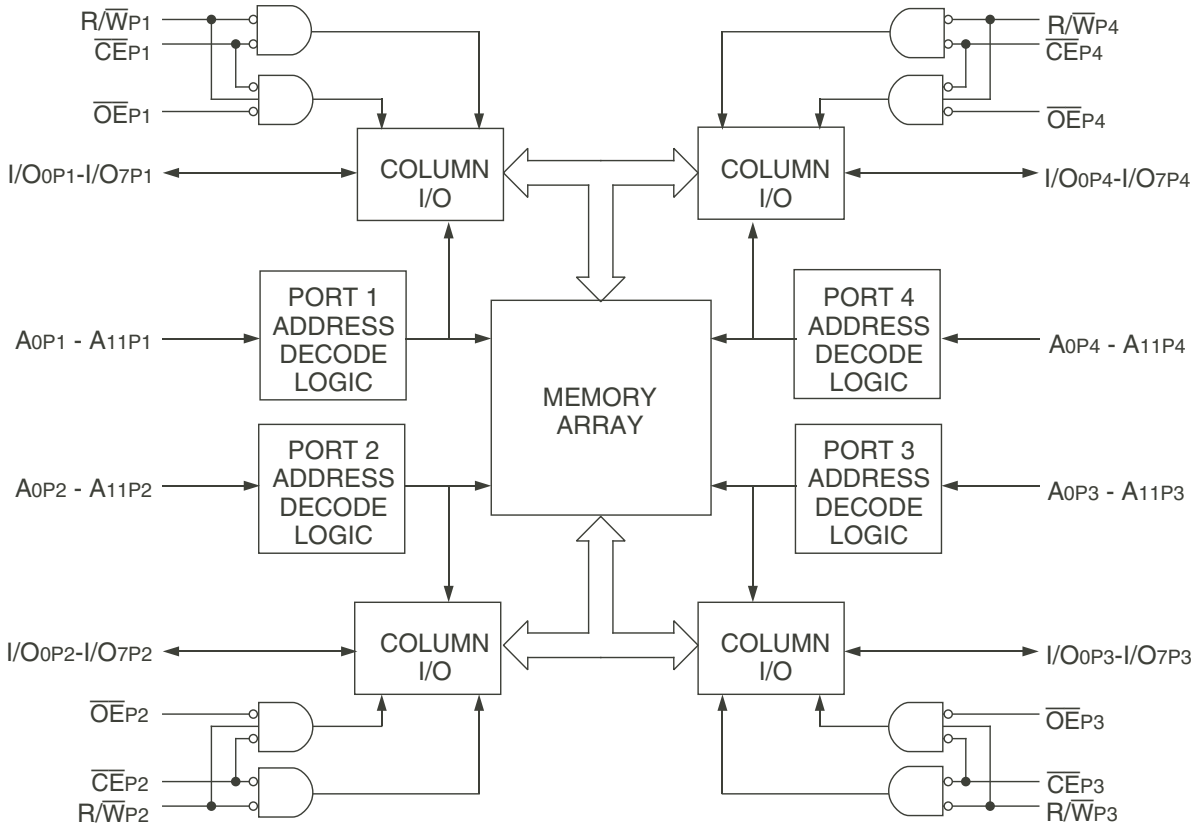

3241 drw 01

reads or writes to any location in memory. It is the user's responsibility to ensure data integrity when simultaneously accessing the same memory location from all ports. An automatic power down feature, controlled by $\overline{CE}$, permits the on-chip circuitry of each port to enter a very low power standby power mode.

Fabricated using CMOS high-performance technology, this FourPort SRAM typically operates on only 750mW of power.

The IDT7054 is packaged in a 128-pin Thin Quad Flatpack (TQFP).

Pin Configuration[1,2,3]

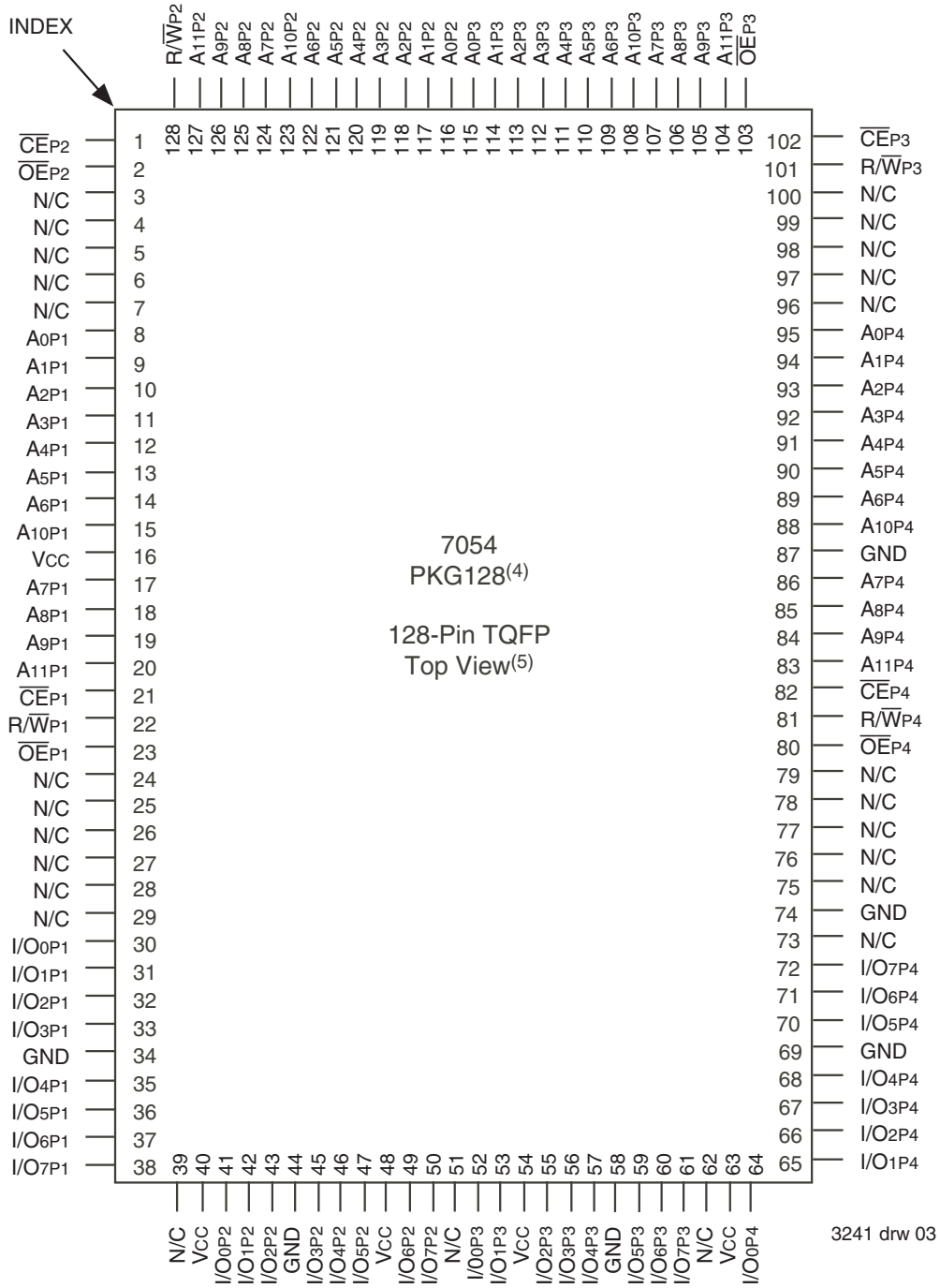

NOTES:

1. All V_{CC} pins must be connected to the power supply.
2. All GND pins must be connected to the ground supply.
3. Package body is approximately 14mm x 20mm x 1.4mm.
4. This package code is used to reference the package diagram.
5. This text does not indicate orientation of the actual part-marking.

Pin Configurations[1,2]

Symbol	Pin Name
A_0 P1 - A_{11} P1	Address Lines - Port 1
A_0 P2 - A_{11} P2	Address Lines - Port 2
A_0 P3 - A_{11} P3	Address Lines - Port 3
A_0 P4 - A_{11} P4	Address Lines - Port 4
I/O_0 P1 - I/O_7 P1	Data I/O - Port 1
I/O_0 P2 - I/O_7 P2	Data I/O - Port 2
I/O_0 P3 - I/O_7 P3	Data I/O - Port 3
I/O_0 P4 - I/O_7 P4	Data I/O - Port 4
$R/\overline{W}$ P1	Read/Write - Port 1
$R/\overline{W}$ P2	Read/Write - Port 2
$R/\overline{W}$ P3	Read/Write - Port 3
$R/\overline{W}$ P4	Read/Write - Port 4
GND	Ground
$\overline{CE}$ P1	Chip Enable - Port 1
$\overline{CE}$ P2	Chip Enable - Port 2
$\overline{CE}$ P3	Chip Enable - Port 3
$\overline{CE}$ P4	Chip Enable - Port 4
$\overline{OE}$ P1	Output Enable - Port 1
$\overline{OE}$ P2	Output Enable - Port 2
$\overline{OE}$ P3	Output Enable - Port 3
$\overline{OE}$ P4	Output Enable - Port 4
V_{CC}	Power

3241 tbl 01

NOTES:
1. All V_{CC} pins must be connected to the power supply.
2. All GND pins must be connected to the ground supply.

Recommended DC Operating Conditions

Symbol	Parameter	Min.	Typ.	Max.	Unit
V_{CC}	Supply Voltage	4.5	5.0	5.5	V
GND	Ground	0	0	0	V
V_{IH}	Input High Voltage	2.2	—	6.0[2]	V
V_{IL}	Input Low Voltage	-0.5[1]	—	0.8	V

3241 tbl 02

NOTES:
1. $V_{IL} \geq$ -1.5V for pulse width less than 10ns.
2. V_{TERM} must not exceed Vcc + 10%.

Capacitance[1]

(T_A = +25°C, f = 1.0MHz) TQFP ONLY

Symbol	Parameter	Conditions[2]	Max.	Unit
C_{IN}	Input Capacitance	V_{IN} = 0V	9	pF
C_{OUT}	Output Capacitance	V_{OUT} = 0V	10	pF

3241 tbl 03

NOTES:
1. This parameter is determined by device characterization but is not production tested.
2. 3dV references the interpolated capacitance when the input and the output signals switch from 0V to 3V or from 3V to 0V.

Maximum Operating Temperature and Supply Voltage[1]

Grade	Ambient Temperature	GND	Vcc
Commercial	0°C to +70°C	0V	5.0V ± 10%
Industrial	-40°C to +85°C	0V	5.0V ± 10%

3241 tbl 04

NOTES:
1. This is the parameter T_A. This is the "instant on" case temperature.

Absolute Maximum Ratings[1]

Symbol	Rating	Commercial & Industrial	Unit
V_{TERM}[2]	Terminal Voltage with Respect to GND	-0.5 to +7.0	V
T_{BIAS}	Temperature Under Bias	-55 to +125	°C
T_{STG}	Storage Temperature	-65 to +150	°C
I_{OUT}	DC Output Current	50	mA

3241 tbl 05

NOTES:
1. Stresses greater than those listed under ABSOLUTE MAXIMUM RATINGS may cause permanent damage to the device. This is a stress rating only and functional operation of the device at these or any other conditions above those indicated in the operational sections of this specification is not implied. Exposure to absolute maximum rating conditions for extended periods may affect reliability.
2. V_{TERM} must not exceed Vcc + 10% for more than 25% of the cycle time or 10ns maximum, and is limited to $\leq$ 20mA for the period of $V_{TERM} \geq$ Vcc + 10%.

DC Electrical Characteristics Over the Operating Temperature and Supply Voltage Range[1,5] (V_{CC} = 5.0V ± 10%)

Symbol	Parameter	Condition	Version		7054X20 Com'l Only TYP.[2]	7054X20 Com'l Only Max.	7054X25 Com'l & Ind TYP.[2]	7054X25 Com'l & Ind Max.	7054X35 Com'l Only TYP.[2]	7054X35 Com'l Only Max.	Unit
I_{CC1}	Operating Power Supply Current (All Ports Active)	$\overline{CE}$ = V_{IL} Outputs Disabled f = 0[3]	COM'L.	S	150	300	150	300	150	300	mA
				L	150	250	150	250	150	250	
			IND.	S	—	—	150	360	150	360	mA
				L	—	—	150	300	150	300	
I_{CC2}	Dynamic Operating Current (All Ports Active)	$\overline{CE}$ = V_{IL} Outputs Disabled f = f_{MAX}[4]	COM'L.	S	240	370	225	350	210	335	mA
				L	210	325	195	305	180	290	
			IND.	S	—	—	225	400	210	395	mA
				L	—	—	195	340	180	330	
I_{SB}	Standby Current (All Ports - TTL Level Inputs)	$\overline{CE}$ = V_{IH} f = f_{MAX}[4]	COM'L.	S	70	95	60	85	40	75	mA
				L	60	80	50	70	35	60	
			IND.	S	—	—	60	115	40	110	mA
				L	—	—	50	85	35	80	
I_{SB1}	Full Standby Current (All Ports - All CMOS Level Inputs)	Both Ports $\overline{CE}$ ≥ V_{CC} - 0.2V V_{IN} ≥ V_{CC} - 0.2V or V_{IN} ≤ 0.2V, f = 0[3]	COM'L.	S	1.5	15	1.5	15	1.5	15	mA
				L	0.3	1.5	0.3	1.5	0.3	1.5	
			IND.	S	—	—	1.5	30	1.5	30	mA
				L	—	—	0.3	4.5	0.3	4.5	

3241 tbl 06

NOTES:
1. 'X' in part number indicates power rating (S or L).
2. V_{CC} = 5V, T_A = +25°C and are not production tested.
3. f = 0 means no address or control lines change.
4. At f = f_{MAX}, address and control lines (except Output Enable) are cycling at the maximum frequency read cycle of 1/t_{RC}, and using "AC Test Conditions" of input levels of GND to 3V.
5. For the case of one port, divide the appropriate current above by four.

DC Electrical Characteristics Over the Operating Temperature and Supply Voltage Range (V_{CC} = 5.0V ± 10%)

Symbol	Parameter	Test Conditions	7054S Min.	7054S Max.	7054L Min.	7054L Max.	Unit
$\|I_{LI}\|$	Input Leakage Current[1]	V_{CC} = 5.5V, V_{IN} = 0V to V_{CC}	—	10	—	5	µA
$\|I_{LO}\|$	Output Leakage Current	$\overline{CE}$ = V_{IH}, V_{OUT} = 0V to V_{CC}	—	10	—	5	µA
V_{OL}	Output Low Voltage	I_{OL} = 4mA	—	0.4	—	0.4	V
V_{OH}	Output High Voltage	I_{OH} = -4mA	2.4	—	2.4	—	V

2674 tbl 07

NOTE:
1. At Vcc ≤ 2.0V input leakages are undefined.

AC Test Conditions

Input Pulse Levels	GND to 3.0V
Input Rise/Fall Times	3ns Max.
Input Timing Reference Levels	1.5V
Output Reference Levels	1.5V
Output Load	Figures 1 and 2

3241 tbl 08

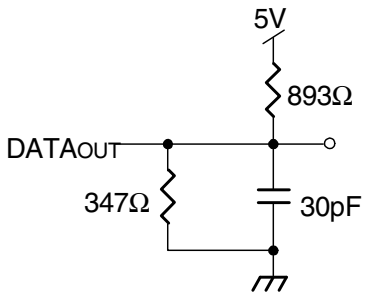

Figure 1. AC Output Test Load

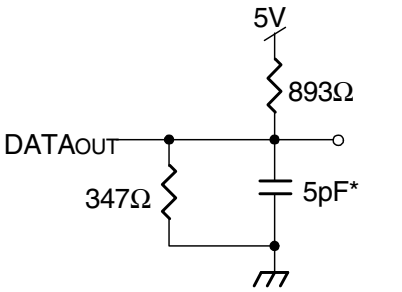

3241 drw 04

Figure 2. Output Test Load (for t_{LZ}, t_{HZ}, t_{WZ}, t_{OW})
*Including scope and jig

Timing Waveform of Read Cycle No. 1, Any Port(1)

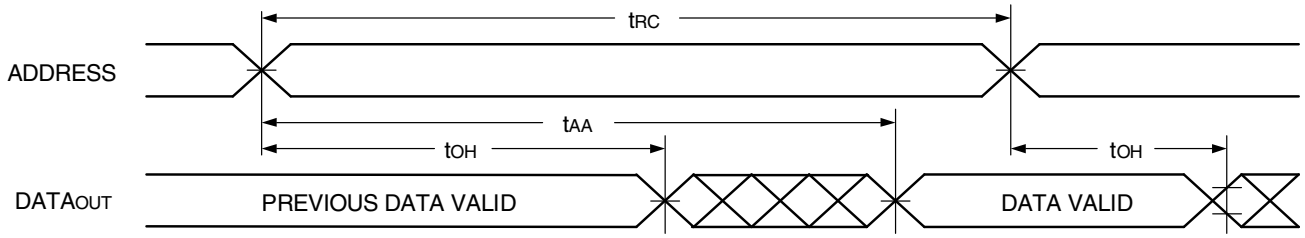

3241 drw 05

NOTE:
1. $R/\overline{W}$ = V_{IH}, $\overline{OE}$ = V_{IL}, and $\overline{CE}$ = V_{IL}.

AC Electrical Characteristics Over the Operating Temperature and Supply Voltage[3]

Symbol	Parameter	7054X20 Com'l Only		7054X25 Com'l & Ind		7054X35 Com'l Only		Unit
		Min.	Max.	Min.	Max.	Min.	Max.	
READ CYCLE								
t_{RC}	Read Cycle Time	20	—	25	—	35	—	ns
t_{AA}	Address Access Time	—	20	—	25	—	35	ns
t_{ACE}	Chip Enable Access Time	—	20	—	25	—	35	ns
t_{AOE}	Output Enable Access Time	—	10	—	15	—	25	ns
t_{OH}	Output Hold from Address Change	0	—	0	—	0	—	ns
t_{LZ}	Output Low-Z Time[1,2]	5	—	5	—	5	—	ns
t_{HZ}	Output High-Z Time[1,2]	—	12	—	15	—	15	ns
t_{PU}	Chip Enable to Power Up Time[2]	0	—	0	—	0	—	ns
t_{PD}	Chip Disable to Power Down Time[2]	—	20	—	25	—	35	ns

3241 tbl 09

NOTES:
1. Transition is measured 0mV from Low or High-impedance voltage with the Output Test Load (Figure 2).
2. This parameter is guaranteed by device characterization but is not production tested.
3. 'X' in part number indicates power rating (S or L).

Timing Waveform of Read Cycle No. 2, Any Port[1, 2]

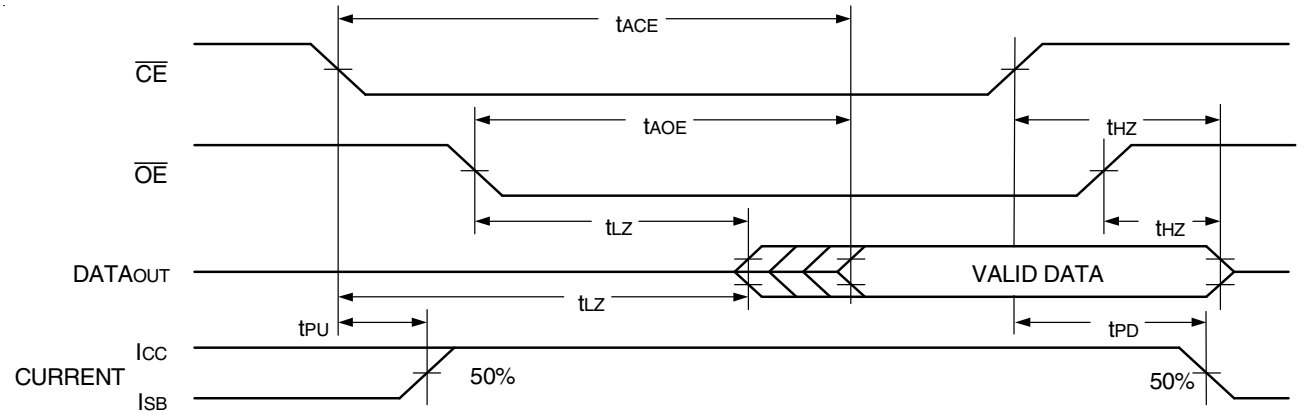

3241 drw 06

NOTES:
1. R/$\overline{W}$ = V_{IH} for Read Cycles.
2. Addresses valid prior to or coincident with $\overline{CE}$ transition LOW.

AC Electrical Characteristics Over the Operating Temperature and Supply Voltage[5]

Symbol	Parameter	7054X20 Com'l Only		7054X25 Com'l & Ind		7054X35 Com'l Only		Unit
		Min.	Max.	Min.	Max.	Min.	Max.	
WRITE CYCLE								
t_{WC}	Write Cycle Time	20	—	25	—	35	—	ns
t_{EW}	Chip Enable to End-of-Write	15	—	20	—	30	—	ns
t_{AW}	Address Valid to End-of-Write	15	—	20	—	30	—	ns
t_{AS}	Address Set-up Time	0	—	0	—	0	—	ns
t_{WP}	Write Pulse Width[3]	15	—	20	—	30	—	ns
t_{WR}	Write Recovery Time	0	—	0	—	0	—	ns
t_{DW}	Data Valid to End-of-Write	15	—	15		20	—	ns
t_{HZ}	Output High-Z Time[1,2]	—	15	—	15	—	15	ns
t_{DH}	Data Hold Time	0	—	0	—	0	—	ns
t_{WZ}	Write Enable to Output in High-Z[1,2]	—	12	—	15	—	15	ns
t_{OW}	Output Active from End-of-Write[1,2]	0	—	0	—	0	—	ns
t_{WDD}	Write Pulse to Data Delay[4]	—	35	—	45	—	55	ns
t_{DDD}	Write Data Valid to Read Data Delay[4]	—	30	—	35	—	45	ns

3241 tbl 10

NOTES:

1. Transition is measured 0mV from Low or High-impedance voltage with the Output Test Load (Figure 2).
2. This parameter is guaranteed by device characterization but is not production tested.
3. If $\overline{OE}$ = V_{IL} during a R/$\overline{W}$ controlled write cycle, the write pulse width must be the larger of t_{WP} or (t_{WZ} + t_{DW}) to allow the I/O drivers to turn off data to be placed on the bus for the required t_{DW}. If $\overline{OE}$ = V_{IH} during an R/$\overline{W}$ controlled write cycle, this requirement does not apply and the write pulse can be as short as the specified t_{WP}. Specified for $\overline{OE}$ = V_{IH} (refer to "Timing Waveform of Write Cycle", Note 8).
4. Port-to-port delay through RAM cells from writing port to reading port, refer to "Timing Waveform of Write with Port-to-Port Read".
5. 'X' in part number indicates power rating.

Timing Waveform of Write Cycle No. 1, R/$\overline{W}$ Controlled Timing(5,8)

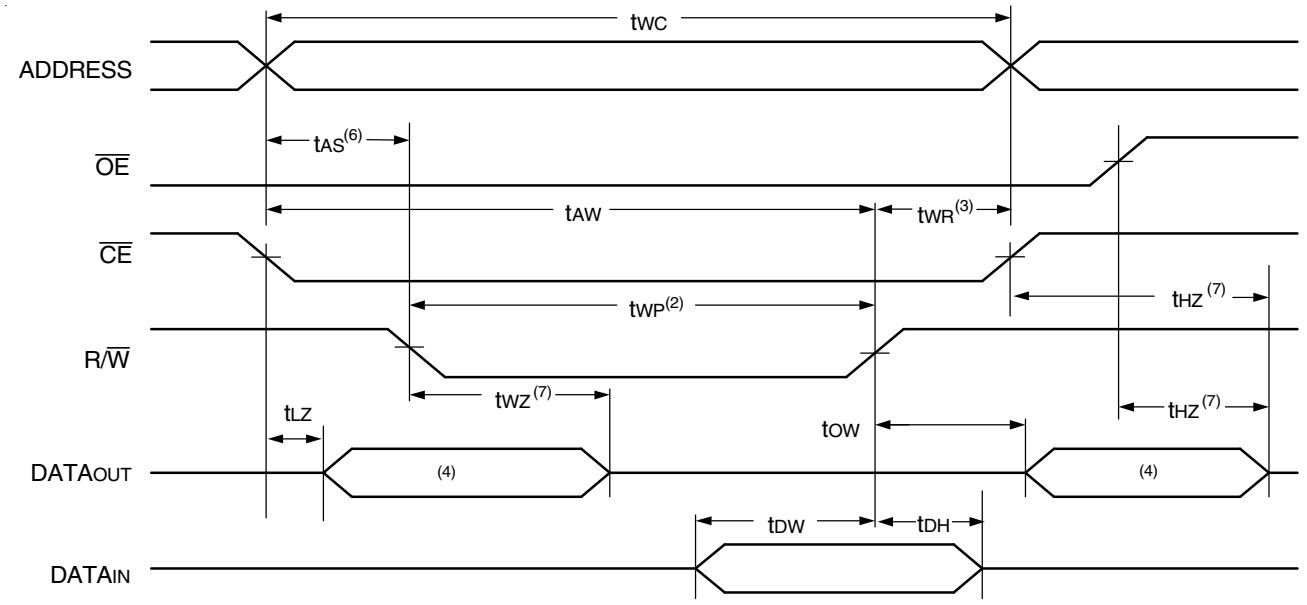

3241 drw 07

Timing Waveform of Write Cycle No. 2, $\overline{CE}$ Controlled Timing(1,5)

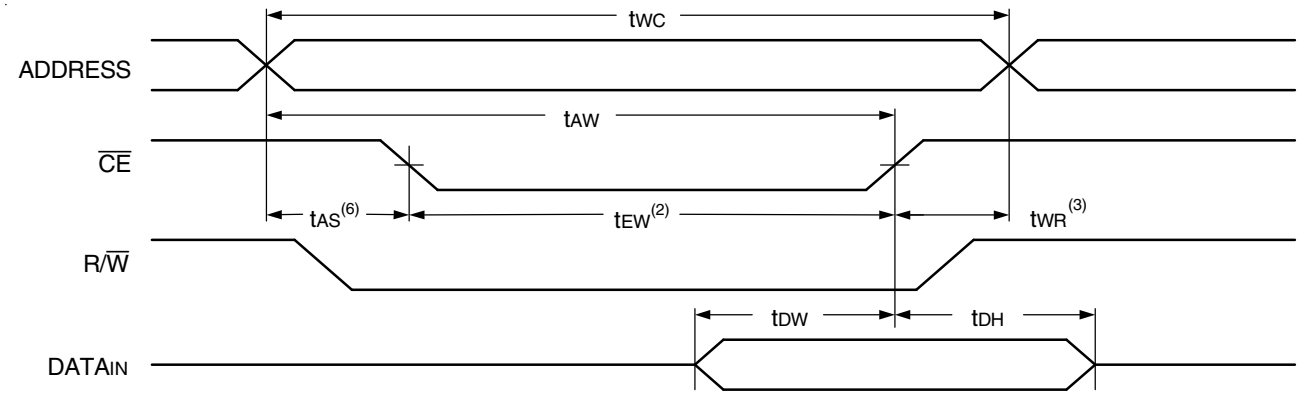

3241 drw 08

NOTES:
1. R/$\overline{W}$ or $\overline{CE}$ = V_{IH} during all address transitions.
2. A write occurs during the overlap (t_{EW} or t_{WP}) of a $\overline{CE}$ = V_{IL} and a R/$\overline{W}$ = V_{IL}.
3. t_{WR} is measured from the earlier of $\overline{CE}$ or R/$\overline{W}$ = V_{IH} to the end of write cycle.
4. During this period, the I/O pins are in the output state, and input signals must not be applied.
5. If the $\overline{CE}$ LOW transition occurs simultaneously with or after the R/$\overline{W}$ = V_{IL} transition, the outputs remain in the High-impedance state.
6. Timing depends on which enable signal is asserted last, $\overline{CE}$ or R/$\overline{W}$.
7. Transition is measured 0mV from Low or High-impedance voltage with the Output Test Load (Figure 2). This parameter is guaranteed but is not production tested.
8. If $\overline{OE}$ = V_{IL} during a R/$\overline{W}$ controlled write cycle, the write pulse width must be the larger of t_{WP} or (t_{WZ} + t_{DW}) to allow the I/O drivers to turn off data to be placed on the bus for the required t_{DW}. If $\overline{OE}$ = V_{IH} during an R/$\overline{W}$ controlled write cycle, this requirement does not apply and the write pulse can be as short as the specified t_{WP}.

Timing Waveform of Write with Port-to-Port Read(1, 2)

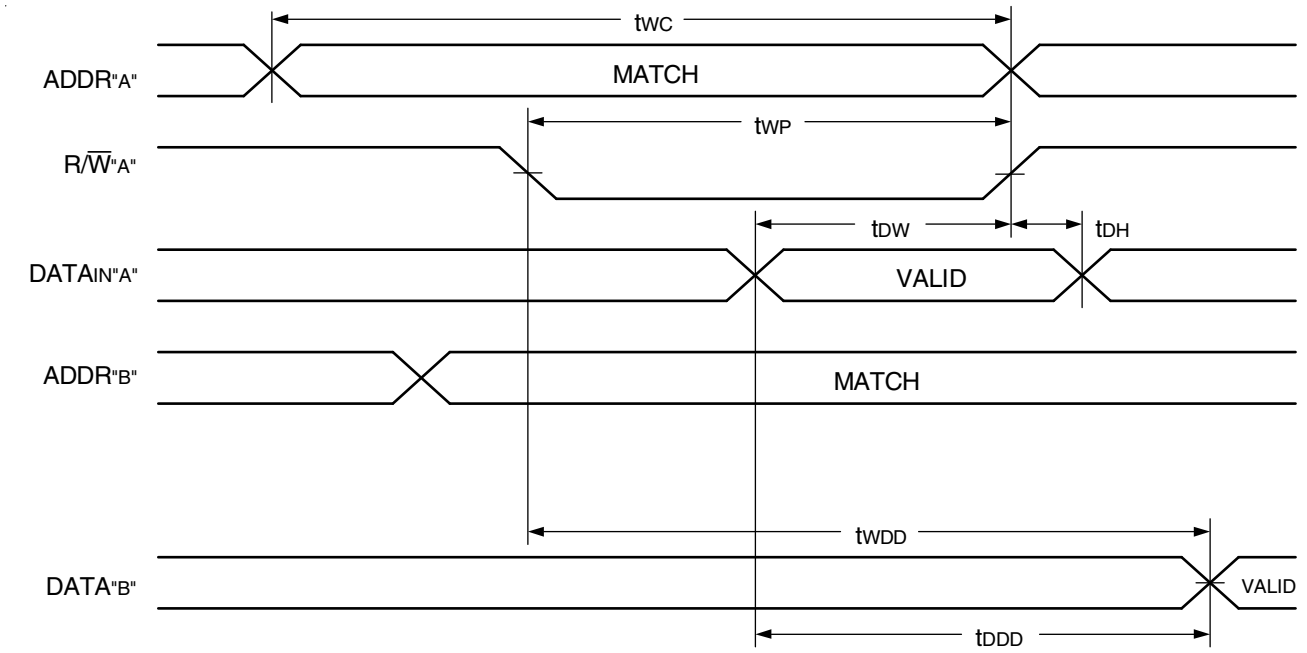

3241 drw 09

NOTES:
1. $\overline{OE}$ = VIL for the reading ports.
2. All timing is the same for left and right ports. Port "A" may be either of the four ports and Port "B" is any other port.

Functional Description

The IDT7054 provides four ports with separate control, address, and I/O pins that permit independent access for reads or writes to any location in memory. These devices have an automatic power down feature controlled by $\overline{CE}$. The $\overline{CE}$ controls on-chip power down circuitry that permits the respective port to go into standby mode when not selected ($\overline{CE}$ = VIH). When a port is enabled, access to the entire memory array is permitted. Each port has its own Output Enable control ($\overline{OE}$). In the read mode, the port's $\overline{OE}$ turns on the output drivers when set LOW. READ/WRITE conditions are illustrated in the table.

Table I – Read/Write Control

Any Port(1)				
R/$\overline{W}$	$\overline{CE}$	$\overline{OE}$	D0-7	Function
X	H	X	Z	Port Deselected: Power-Down
X	H	X	Z	$\overline{CE}_{P1}$=$\overline{CE}_{P2}$=$\overline{CE}_{P3}$=$\overline{CE}_{P4}$=VIH Power Down Mode ISB or ISB1
L	L	X	DATAIN	Data on port written into memory(2)
H	L	L	DATAOUT	Data in memory output on port
X	X	H	Z	Outputs Disabled

3241 tbl 11

NOTES:
1. "H" = VIH, "L" = VIL, "X" = Don't Care, "Z "= High Impedance
2. For valid write operation, no more than one port can write to the same address location at the same time.

Ordering Information

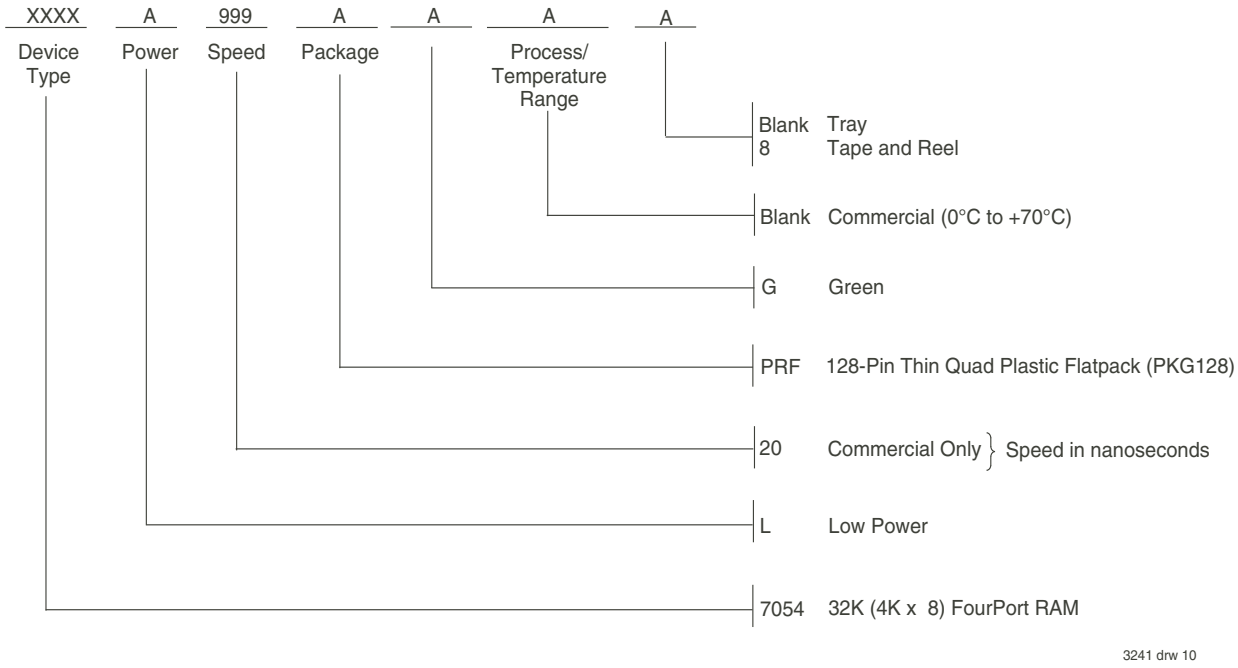

3241 drw 10

NOTE:
1. Note that information regarding recently obsoleted parts is included in this datasheet for customer convenience.

Ordering Information

Speed (ns)	Orderable Part ID	Pkg. Code	Pkg. Type	Temp. Grade
20	7054L20PRFG	PKG128	TQFP	C
	7054L20PRFG8	PKG128	TQFP	C

Datasheet Document History

01/18/99:	Initiated datasheet document history
	Converted to new format
	Cosmetic typographical corrections
	Added additional notes to pin configurations
06/04/99:	Changed drawing format
	Page 1 Corrected DSC number
09/01/99:	Removed Preliminary
11/10/99:	Replaced IDT logo
05/23/00:	Page 4 Increased storage temperature parameter
	Clarified T_A parameter
	Page 5 DC Electrical parameters–changed wording from "open" to "disabled"
	Changed ±200mV to 0mV in notes
10/22/01:	Page 2 & 3 Added date revision for pin configurations
	Page 5, 7 & 8 Added Industrial temp to column heading for 25ns speed to DC & AC Electrical Characteristics
	Page 11 Added Industrial temp offering to 25ns ordering information
	Page 4, 5, 7 & 8 Removed Industrial temp footnote from all tables
	Page 6 Changed 5ns to 3ns in AC Test Conditions table
	Page 1 & 11 Replaced ™ logo with ® logo
02/20/15:	Page 1 Added green availability to features
	Page 2 Removed IDT in reference to fabrication
	Page 2 2V battery backup for Low-power versions are no longer offered
	Page 2,3 & 10 The package code PK128-1 changed to PK128 to match standard package codes
	Page 10 Added Tape and Reel and Green to Ordering Information
	Pages 1-10 Removed all military data including the G108 pin configuration, changed table headings and ordering information to indicate that there is no longer a military offering for this 7054 device
07/02/18:	Product Discontinuation Notice - PDN# SP-17-02
	Last time buy expires June 15, 2018
07/11/19:	Pages 1 & 10 Deleted obsolete Commercial 25/35ns and Industrial 25ns speed grades
	Pages 1 & 10 Removed standard product offering and Industrial speed grade offering
	Pages 2 & 10 Updated package code PK128 to PKG128
	Page 10 Added Orderable Part Information
04/07/22:	Pages 1 - 12 Source file updated to reflect previous Corporate Marketing rebranding
	Page 2 Updated the package code

IMPORTANT NOTICE AND DISCLAIMER

RENESAS ELECTRONICS CORPORATION AND ITS SUBSIDIARIES (“RENESAS”) PROVIDES TECHNICAL SPECIFICATIONS AND RELIABILITY DATA (INCLUDING DATASHEETS), DESIGN RESOURCES (INCLUDING REFERENCE DESIGNS), APPLICATION OR OTHER DESIGN ADVICE, WEB TOOLS, SAFETY INFORMATION, AND OTHER RESOURCES “AS IS” AND WITH ALL FAULTS, AND DISCLAIMS ALL WARRANTIES, EXPRESS OR IMPLIED, INCLUDING, WITHOUT LIMITATION, ANY IMPLIED WARRANTIES OF MERCHANTABILITY, FITNESS FOR A PARTICULAR PURPOSE, OR NON-INFRINGEMENT OF THIRD PARTY INTELLECTUAL PROPERTY RIGHTS.

These resources are intended for developers skilled in the art designing with Renesas products. You are solely responsible for (1) selecting the appropriate products for your application, (2) designing, validating, and testing your application, and (3) ensuring your application meets applicable standards, and any other safety, security, or other requirements. These resources are subject to change without notice. Renesas grants you permission to use these resources only for development of an application that uses Renesas products. Other reproduction or use of these resources is strictly prohibited. No license is granted to any other Renesas intellectual property or to any third party intellectual property. Renesas disclaims responsibility for, and you will fully indemnify Renesas and its representatives against, any claims, damages, costs, losses, or liabilities arising out of your use of these resources. Renesas' products are provided only subject to Renesas' Terms and Conditions of Sale or other applicable terms agreed to in writing. No use of any Renesas resources expands or otherwise alters any applicable warranties or warranty disclaimers for these products.

(Rev.1.0 Mar 2020)

Corporate Headquarters

TOYOSU FORESIA, 3-2-24 Toyosu,
Koto-ku, Tokyo 135-0061, Japan
www.renesas.com

Contact Information

For further information on a product, technology, the most up-to-date version of a document, or your nearest sales office, please visit:
www.renesas.com/contact/

Trademarks

Renesas and the Renesas logo are trademarks of Renesas Electronics Corporation. All trademarks and registered trademarks are the property of their respective owners.

© 2020 Renesas Electronics Corporation. All rights reserved.