HIGH-SPEED 128K x 8 SYNCHRONOUS PIPELINED DUAL-PORT STATIC RAM

709099L

Features

- **True Dual-Ported memory cells which allow simultaneous access of the same memory location**
- **High-speed clock to data access**
  - *Industrial: 9ns (max.)*
- **Low-power operation**
  - *IDT709099L*
    Active: 1.2W (typ.)
    Standby: 2.5mW (typ.)
- **Flow-Through or Pipelined output mode on either Port via the $\overline{FT}$/PIPE pins**
- **Dual chip enables allow for depth expansion without additional logic**
- **Counter enable and reset features**
- **Full synchronous operation on both ports**
  - *4ns setup to clock and 0ns hold on all control, data, and address inputs*
  - *Data input, address, and control registers*
  - *Fast 9ns clock to data out in the Pipelined output mode*
  - *Self-timed write allows fast cycle time*
  - *15ns cycle time, 66.7MHz operation in Pipelined output mode*
- **TTL- compatible, single 5V (±10%) power supply**
- **Available in a 100-pin Thin Quad Flatpack (TQFP) package**

Functional Block Diagram

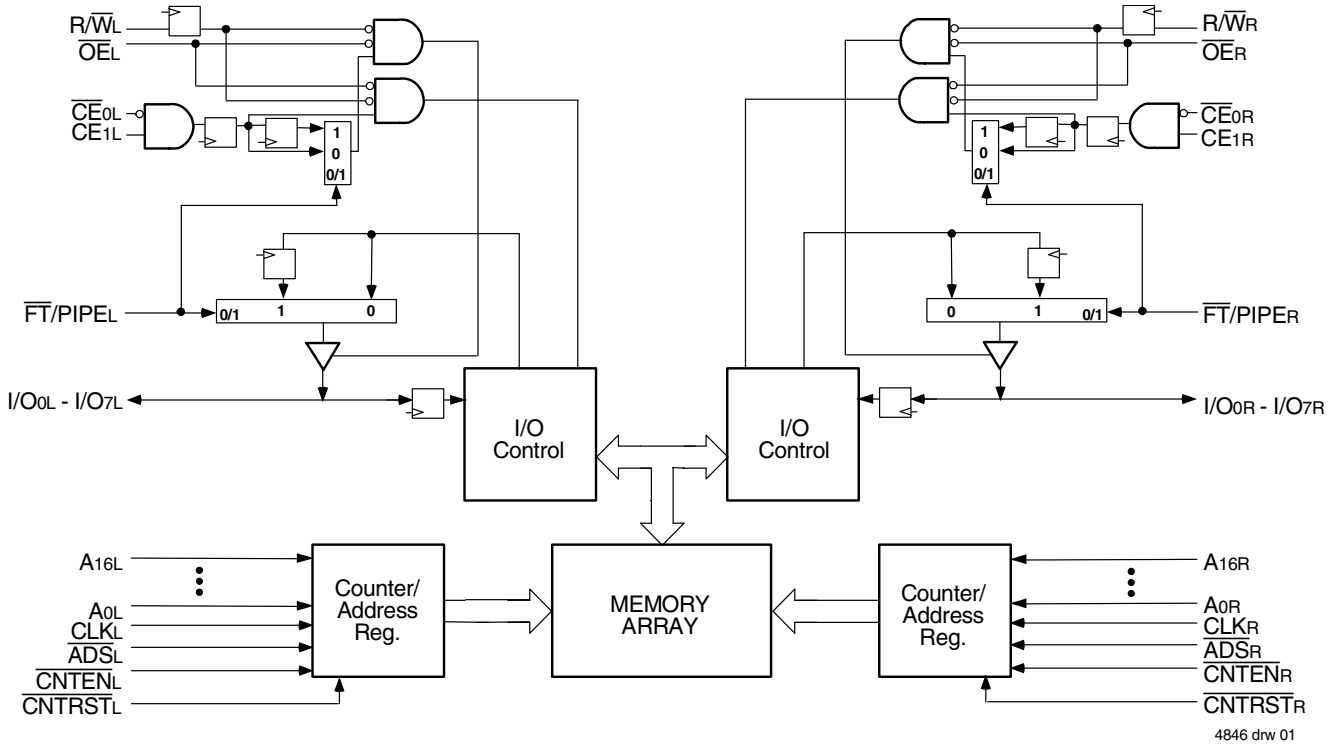

Description

The IDT709099 is a high-speed 128K x 8 bit synchronous Dual-Port RAM. The memory array utilizes Dual-Port memory cells to allow simultaneous access of any address from both ports. Registers on control, data, and address inputs provide minimal setup and hold times. The timing latitude provided by this approach allows systems to be designed with very short cycle times.

With an input data register, the IDT709099 has been optimized for applications having unidirectional or bidirectional data flow in bursts. An automatic power down feature, controlled by $\overline{CE}_0$ and CE_1, permits the on-chip circuitry of each port to enter a very low standby power mode. Fabricated using CMOS high-performance technology, these devices typically operate on only 1.2W of power.

Pin Configurations[1,2,3]

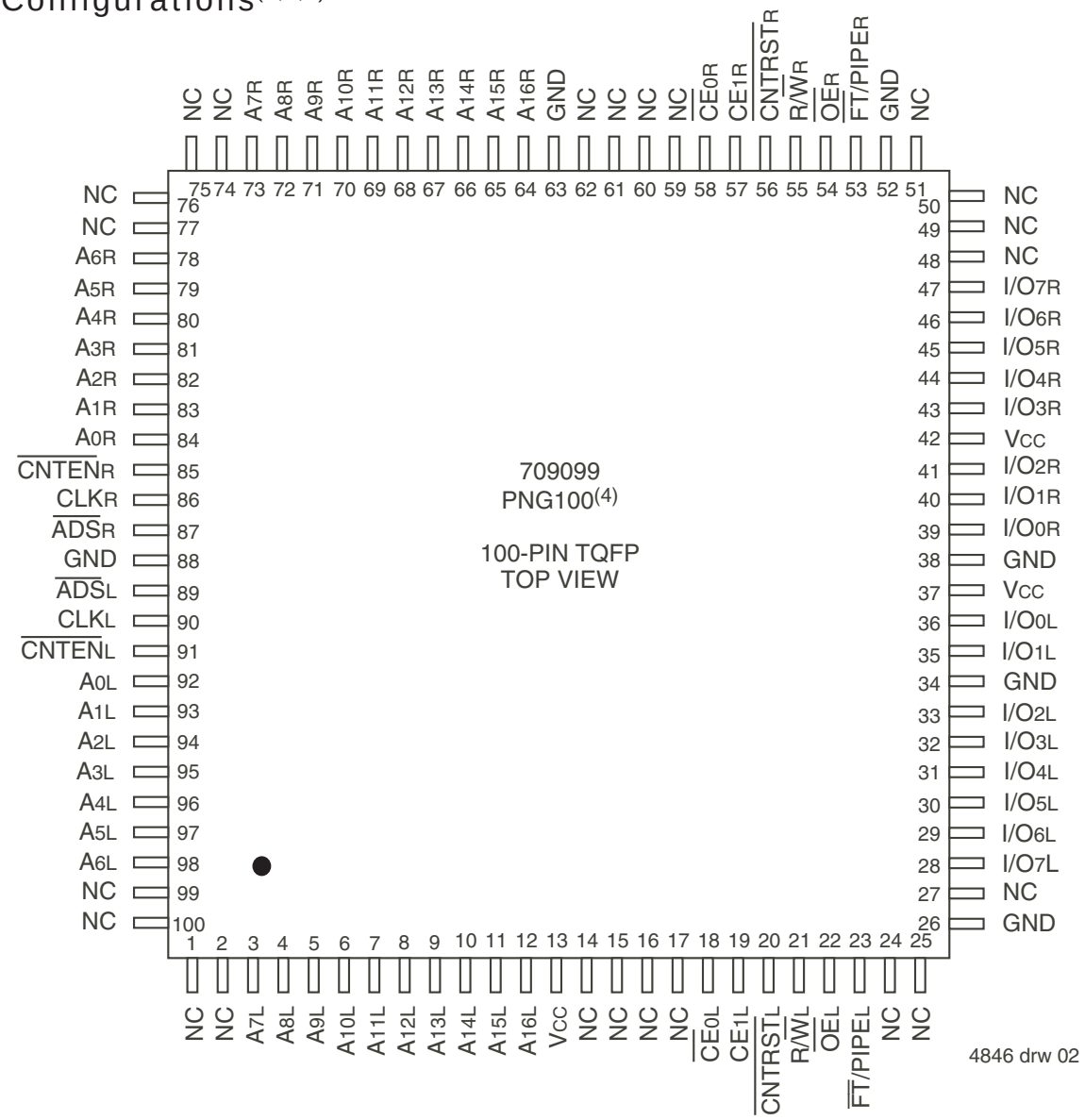

NOTES:

1. All V_{CC} pins must be connected to power supply.
2. All GND pins must be connected to ground.
3. Package body is approximately 14mm x 14mm x 1.4mm
4. This package code is used to reference the package diagram.

Pin Names

Left Port	Right Port	Names
$\overline{CE}_{0L}$, CE_{1L}	$\overline{CE}_{0R}$, CE_{1R}	Chip Enables
R/$\overline{W}_L$	R/$\overline{W}_R$	Read/Write Enable
$\overline{OE}_L$	$\overline{OE}_R$	Output Enable
A_{0L} - A_{16L}	A_{0R} - A_{16R}	Address
I/O_{0L} - I/O_{7L}	I/O_{0R} - I/O_{7R}	Data Input/Output
CLK_L	CLK_R	Clock
$\overline{ADS}_L$	$\overline{ADS}_R$	Address Strobe
$\overline{CNTEN}_L$	$\overline{CNTEN}_R$	Counter Enable
$\overline{CNTRST}_L$	$\overline{CNTRST}_R$	Counter Reset
$\overline{FT}$/$PIPE_L$	$\overline{FT}$/$PIPE_R$	Flow-Through/Pipeline
V_{CC}		Power
GND		Ground

4846 tbl 01

Truth Table I—Read/Write and Enable Control(1,2,3)

$\overline{OE}$	CLK	$\overline{CE}_0$	CE_1	R/$\overline{W}$	I/O_{0-7}	Mode
X	↑	H	X	X	High-Z	Deselected—Power Down
X	↑	X	L	X	High-Z	Deselected—Power Down
X	↑	L	H	L	$DATA_{IN}$	Write
L	↑	L	H	H	$DATA_{OUT}$	Read
H	X	L	H	X	High-Z	Outputs Disabled

4846 tbl 02

NOTES:
1. "H" = V_{IH}, "L" = V_{IL}, "X" = Don't Care.
2. $\overline{ADS}$, $\overline{CNTEN}$, $\overline{CNTRST}$ = X.
3. $\overline{OE}$ is an asynchronous input signal.

Truth Table II—Address Counter Control(1,2,6)

Address	Previous Address	Addr Used	CLK	$\overline{ADS}$	$\overline{CNTEN}$	$\overline{CNTRST}$	I/O(3)	Mode
X	X	0	↑	X	X	L	$D_{I/O(0)}$	Counter Reset to Address 0
An	X	An	↑	L(4)	X	H	$D_{I/O(n)}$	External Address Utilized
An	Ap	Ap	↑	H	H	H	$D_{I/O(n)}$	External Address Blocked—Counter Disabled (Ap reused)
X	Ap	Ap + 1	↑	H	L(5)	H	$D_{I/O(n+1)}$	Counter Enable—Internal Address Generation

4846 tbl 03

NOTES:
1. "H" = V_{IH}, "L" = V_{IL}, "X" = Don't Care.
2. $\overline{CE}_0$ and $\overline{OE}$ = V_{IL}; CE_1 and R/$\overline{W}$ = V_{IH}.
3. Outputs configured in Flow-Through Output mode; if outputs are in Pipelined mode the data out will be delayed by one cycle.
4. $\overline{ADS}$ is independent of all other signals including $\overline{CE}_0$ and CE_1.
5. The address counter advances if $\overline{CNTEN}$ = V_{IL} on the rising edge of CLK, regardless of all other signals including $\overline{CE}_0$ and CE_1.
6. While an external address is being loaded ($\overline{ADS}$ = V_{IL}), R/$\overline{W}$ = V_{IH} is recommended to ensure data is not written arbitrarily.

Recommended Operating Temperature and Supply Voltage

Grade	Ambient Temperature[2]	GND	Vcc
Commercial	0°C to +70°C	0V	5.0V ± 10%
Industrial	-40°C to +85°C	0V	5.0V ± 10%

4846 tbl 04

NOTES:
1. This is the parameter T_A. This is the "instant on" case temperature.

Recommended DC Operating Conditions

Symbol	Parameter	Min.	Typ.	Max.	Unit
V_{CC}	Supply Voltage	4.5	5.0	5.5	V
GND	Ground	0	0	0	V
V_{IH}	Input High Voltage	2.2	—	6.0[1]	V
V_{IL}	Input Low Voltage	-0.5[2]	—	0.8	V

4846 tbl 05

NOTES:
1. V_{TERM} must not exceed V_{CC} + 10%.
2. $V_{IL} \geq$ -1.5V for pulse width less than 10ns.

Absolute Maximum Ratings[1]

Symbol	Rating	Commercial & Industrial	Unit
V_{TERM}[2]	Terminal Voltage with Respect to GND	-0.5 to +7.0	V
T_{BIAS}	Temperature Under Bias	-55 to +125	°C
T_{STG}	Storage Temperature	-65 to +150	°C
I_{OUT}	DC Output Current	50	mA

4846 tbl 06

NOTES:
1. Stresses greater than those listed under ABSOLUTE MAXIMUM RATINGS may cause permanent damage to the device. This is a stress rating only and functional operation of the device at these or any other conditions above those indicated in the operational sections of this specification is not implied. Exposure to absolute maximum rating conditions for extended periods may affect reliability.
2. V_{TERM} must not exceed V_{CC} + 10% for more than 25% of the cycle time or 10ns maximum, and is limited to $\leq$ 20mA for the period of $V_{TERM} \geq V_{CC}$ + 10%.

Capacitance[1]

(T_A = +25°C, f = 1.0MHz)

Symbol	Parameter	Conditions[2]	Max.	Unit
C_{IN}	Input Capacitance	V_{IN} = 3dV	9	pF
C_{OUT}[3]	Output Capacitance	V_{OUT} = 3dV	10	pF

4846 tbl 07

NOTES:
1. These parameters are determined by device characterization, but are not production tested.
2. 3dV references the interpolated capacitance when the input and output switch from 0V to 3V or from 3V to 0V.
3. C_{OUT} also references $C_{I/O}$.

DC Electrical Characteristics Over the Operating Temperature Supply Voltage Range (V_{CC} = 5.0V ± 10%)

Symbol	Parameter	Test Conditions	709099L		Unit
			Min.	Max.	
$\|I_{LI}\|$	Input Leakage Current[1]	V_{CC} = 5.5V, V_{IN} = 0V to V_{CC}	—	5	µA
$\|I_{LO}\|$	Output Leakage Current	$\overline{CE}_0$ = V_{IH} or CE_1 = V_{IL}, V_{OUT} = 0V to V_{CC}	—	5	µA
V_{OL}	Output Low Voltage	I_{OL} = +4mA	—	0.4	V
V_{OH}	Output High Voltage	I_{OH} = -4mA	2.4	—	V

4846 tbl 08

NOTE:
1. At $V_{CC} \leq$ 2.0V input leakages are undefined.

DC Electrical Characteristics Over the Operating Temperature and Supply Voltage Range[3] (V_{CC} = 5V ± 10%)

Symbol	Parameter	Test Condition	Version		709099L9 Com'l & Ind		709099L12 Com'l Only		Unit
					Typ.[4]	Max.	Typ.[4]	Max.	
I_{CC}	Dynamic Operating Current (Both Ports Active)	$\overline{CE}_L$ and $\overline{CE}_R$= V_{IL} Outputs Disabled f = f_{MAX}[1]	COM'L	L	250	400	230	355	mA
			IND	L	300	430	—	—	
I_{SB1}	Standby Current (Both Ports - TTL Level Inputs)	$\overline{CE}_L$ = $\overline{CE}_R$ = V_{IH} f = f_{MAX}[1]	COM'L	L	80	135	70	110	mA
			IND	L	95	160	—	—	
I_{SB2}	Standby Current (One Port - TTL Level Inputs)	$\overline{CE}_{"A"}$ = V_{IL} and $\overline{CE}_{"B"}$ = V_{IH}[3] Active Port Outputs Disabled, f=f_{MAX}[1]	COM'L	L	175	275	150	240	mA
			IND	L	195	295	—	—	
I_{SB3}	Full Standby Current (Both Ports - CMOS Level Inputs)	Both Ports CE_R and $\overline{CE}_L \geq V_{CC}$ - 0.2V $V_{IN} \geq V_{CC}$ - 0.2V or $V_{IN} \leq$ 0.2V, f = 0[2]	COM'L	L	0.5	3.0	0.5	3.0	mA
			IND	L	0.5	6.0	—	—	
I_{SB4}	Full Standby Current (One Port - CMOS Level Inputs)	$\overline{CE}_{"A"} \leq$ 0.2V and $\overline{CE}_{"B"} \geq V_{CC}$ - 0.2V[5] $V_{IN} \geq V_{CC}$ - 0.2V or $V_{IN} \leq$ 0.2V, Active Port Outputs Disabled, f = f_{MAX}[1]	COM'L	L	170	270	140	225	mA
			IND	L	190	290	—	—	

4846 tbl 09

NOTES:

1. At f = f_{MAX}, address and control lines (except Output Enable) are cycling at the maximum frequency clock cycle of 1/t_{CYC}, using "AC TEST CONDITIONS" at input levels of GND to 3V.
2. f = 0 means no address, clock, or control lines change. Applies only to input at CMOS level standby.
3. Port "A" may be either left or right port. Port "B" is the opposite from port "A".
4. Vcc = 5V, TA = 25°C for Typ, and are not production tested. $I_{CC\,DC}$(f=0) = 150mA (Typ).
5. $\overline{CE}_X$ = V_{IL} means $\overline{CE}_{0X}$ = V_{IL} and CE_{1X} = V_{IH}
   $\overline{CE}_X$ = V_{IH} means $\overline{CE}_{0X}$ = V_{IH} or CE_{1X} = V_{IL}
   $\overline{CE}_X \leq$ 0.2V means $\overline{CE}_{0X} \leq$ 0.2V and $CE_{1X} \geq V_{CC}$ - 0.2V
   $\overline{CE}_X \geq V_{CC}$ - 0.2V means $\overline{CE}_{0X} \geq V_{CC}$ - 0.2V or $CE_{1X} \leq$ 0.2V
   "X" represents "L" for left port or "R" for right port.

AC Test Conditions

Input Pulse Levels	GND to 3.0V
Input Rise/Fall Times	3ns Max.
Input Timing Reference Levels	1.5V
Output Reference Levels	1.5V
Output Load	Figures 1,2 and 3

4846 tbl 10

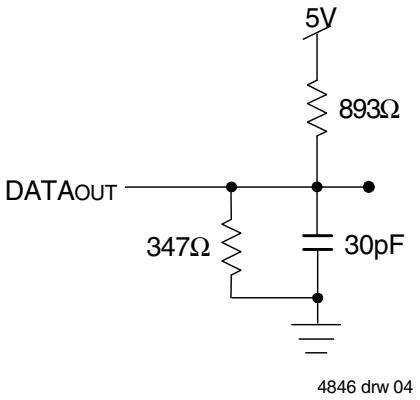

Figure 1. AC Output Test load.

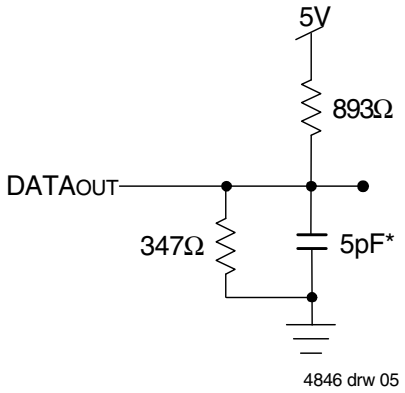

Figure 2. Output Test Load (For t_{CKLZ}, t_{CKHZ}, t_{OLZ}, and t_{OHZ}).
*Including scope and jig.

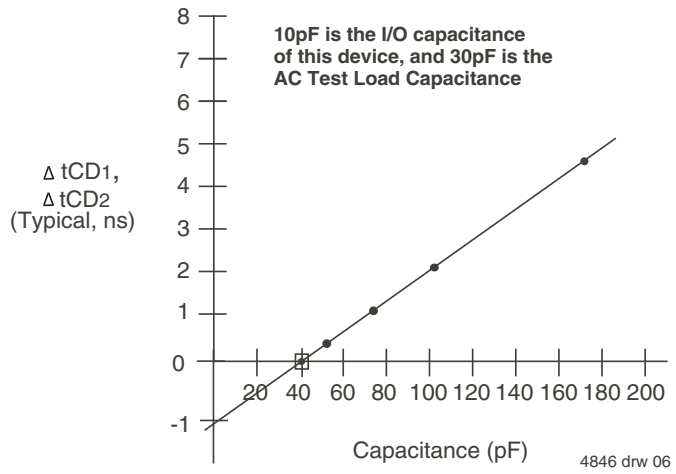

Figure 3. Typical Output Derating (Lumped Capacitive Load).

AC Electrical Characteristics Over the Operating Temperature Range (Read and Write Cycle Timing)[3] (V_{CC} = 5V ± 10%=)

		709099L9 Com'l & Ind		709099L12 Com'l Only		
Symbol	**Parameter**	**Min.**	**Max.**	**Min.**	**Max.**	**Unit**
t_{CYC1}	Clock Cycle Time (Flow-Through)[2]	25	—	30	—	ns
t_{CYC2}	Clock Cycle Time (Pipelined)[2]	15	—	20	—	ns
t_{CH1}	Clock High Time (Flow-Through)[2]	12	—	12	—	ns
t_{CL1}	Clock Low Time (Flow-Through)[2]	12	—	12	—	ns
t_{CH2}	Clock High Time (Pipelined)[2]	6	—	8	—	ns
t_{CL2}	Clock Low Time (Pipelined)[2]	6	—	8	—	ns
t_R	Clock Rise Time	—	3	—	3	ns
t_F	Clock Fall Time	—	3	—	3	ns
t_{SA}	Address Setup Time	4	—	4	—	ns
t_{HA}	Address Hold Time	1	—	1	—	ns
t_{SC}	Chip Enable Setup Time	4	—	4	—	ns
t_{HC}	Chip Enable Hold Time	1	—	1	—	ns
t_{SW}	R/$\overline{W}$ Setup Time	4	—	4	—	ns
t_{HW}	R/$\overline{W}$ Hold Time	1	—	1	—	ns
t_{SD}	Input Data Setup Time	4	—	4	—	ns
t_{HD}	Input Data Hold Time	1	—	1	—	ns
t_{SAD}	$\overline{ADS}$ Setup Time	4	—	4	—	ns
t_{HAD}	$\overline{ADS}$ Hold Time	1	—	1	—	ns
t_{SCN}	$\overline{CNTEN}$ Setup Time	4	—	4	—	ns
t_{HCN}	$\overline{CNTEN}$ Hold Time	1	—	1	—	ns
t_{SRST}	$\overline{CNTRST}$ Setup Time	4	—	4	—	ns
t_{HRST}	$\overline{CNTRST}$ Hold Time	1	—	1	—	ns
t_{OE}	Output Enable to Data Valid	—	12	—	12	ns
t_{OLZ}	Output Enable to Output Low-Z[1]	2	—	2	—	ns
t_{OHZ}	Output Enable to Output High-Z[1]	1	7	1	7	ns
t_{CD1}	Clock to Data Valid (Flow-Through)[2]	—	20	—	25	ns
t_{CD2}	Clock to Data Valid (Pipelined)[2]	—	9	—	12	ns
t_{DC}	Data Output Hold After Clock High	2	—	2	—	ns
t_{CKHZ}	Clock High to Output High-Z[1]	2	9	2	9	ns
t_{CKLZ}	Clock High to Output Low-Z[1]	2	—	2	—	ns
Port-to-Port Delay						
t_{CWDD}	Write Port Clock High to Read Data Delay	—	35	—	40	ns
t_{CCS}	Clock-to-Clock Setup Time	—	15	—	15	ns

4846 tbl 11

NOTES:
1. Transition is measured 0mV from Low or High-impedance voltage with the Output Test Load (Figure 2). This parameter is guaranteed by device characterization, but is not production tested.
2. The Pipelined output parameters (t_{CYC2}, t_{CD2}) to either the Left or Right ports when $\overline{FT}$/PIPE = V_{IH}. Flow-Through parameters (t_{CYC1}, t_{CD1}) apply when $\overline{FT}$/PIPE = V_{IL} for that port.
3. All input signals are synchronous with respect to the clock except for the asynchronous Output Enable ($\overline{OE}$), $\overline{FT}$/PIPE$_R$ and $\overline{FT}$/PIPE$_L$.

Timing Waveform of Read Cycle for Flow-Through Output ($\overline{FT}$/PIPE"X" = V_{IL})(3,6)

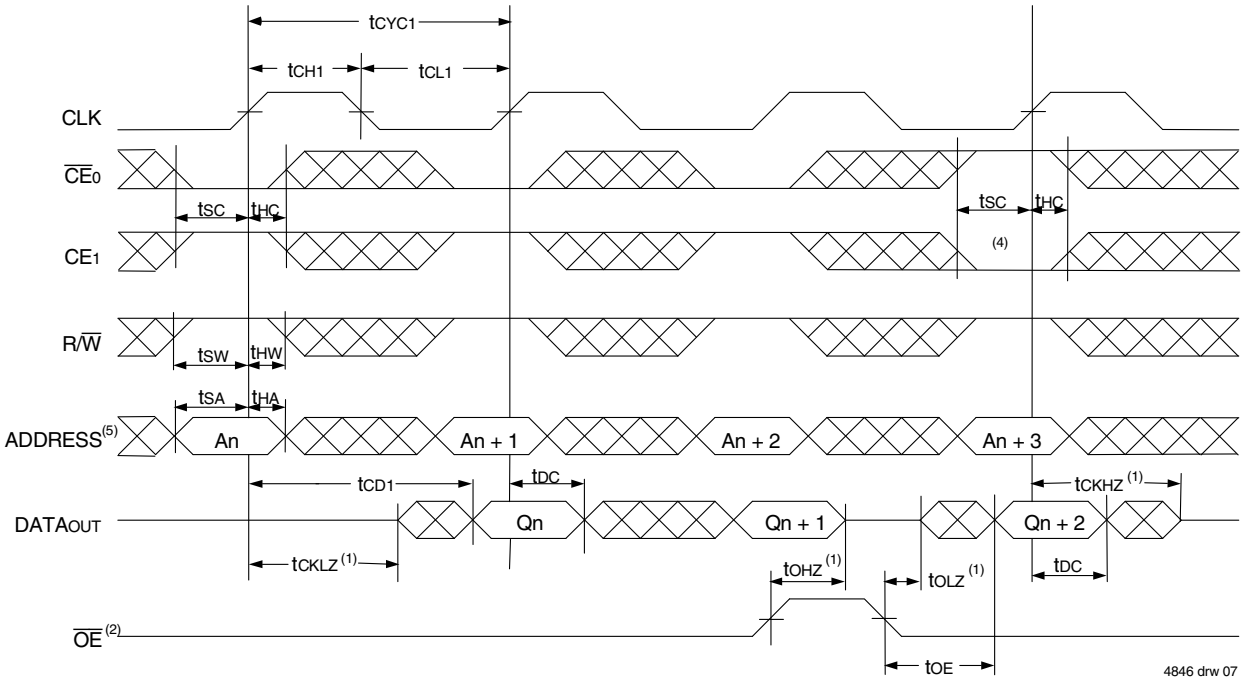

Timing Waveform of Read Cycle for Pipelined Operation ($\overline{FT}$/PIPE"X" = V_{IH})(3,6)

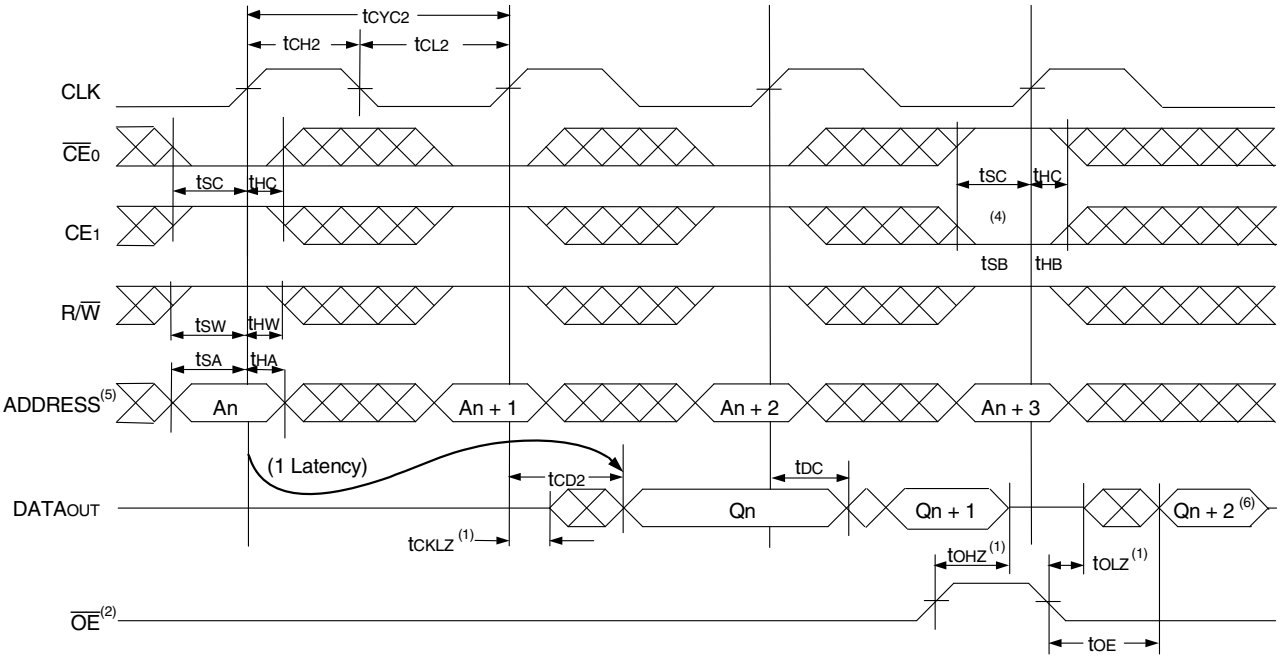

NOTES:

1. Transition is measured 0mV from Low or High-impedance voltage with the Output Test Load (Figure 2).
2. $\overline{OE}$ is asynchronously controlled; all other inputs are synchronous to the rising clock edge.
3. $\overline{ADS}$ = V_{IL} and $\overline{CNTRST}$ = V_{IH}.
4. The output is disabled (High-Impedance state) by $\overline{CE}_0$ = V_{IH} or CE_1 = V_{IL} following the next rising edge of the clock. Refer to Truth Table 1.
5. Addresses do not have to be accessed sequentially since $\overline{ADS}$ = V_{IL} constantly loads the address on the rising edge of the CLK; numbers are for reference use only.
6. 'X' here denotes Left or Right port. The diagram is with respect to that port.

Timing Waveform of a Bank Select Pipelined Read(1,2)

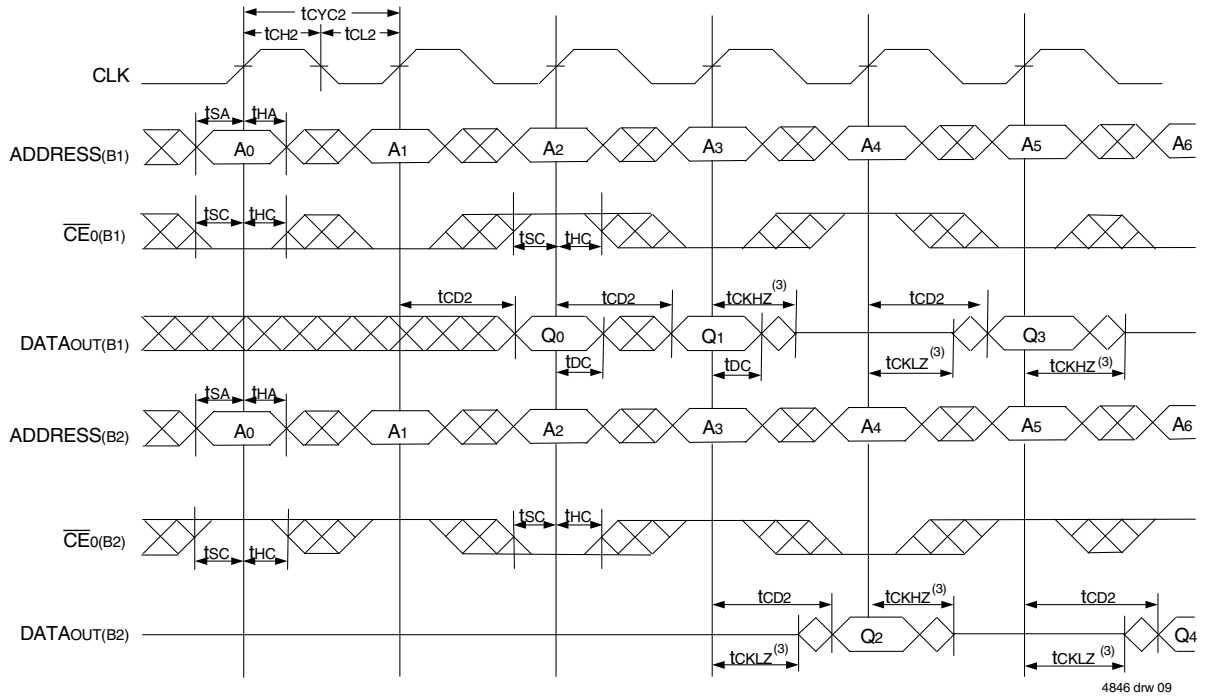

Timing Waveform of Write with Port-to-Port Flow-Through Read(4,5,7)

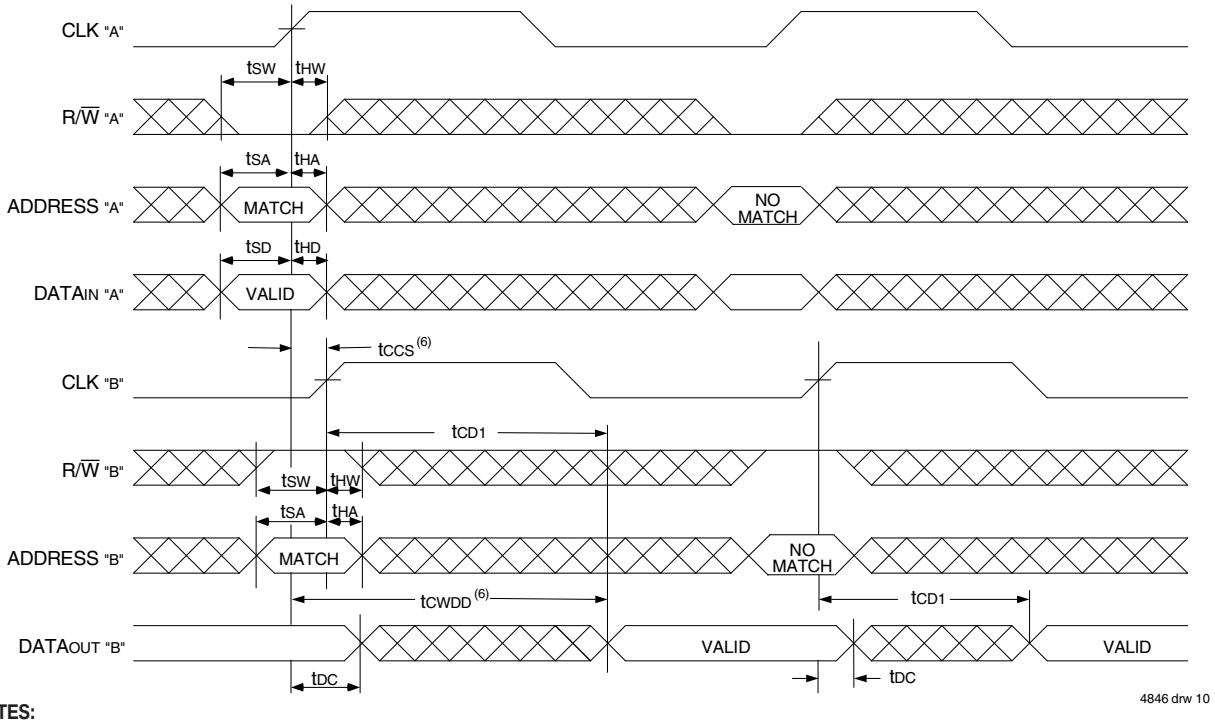

NOTES:

1. B1 Represents Bank #1; B2 Represents Bank #2. Each Bank consists of one IDT709099 for this waveform, and are setup for depth expansion in this example. ADDRESS(B1) = ADDRESS(B2) in this situation.
2. $\overline{OE}$, and $\overline{ADS}$ = V_{IL}; $CE_{1(B1)}$, $CE_{1(B2)}$, R/$\overline{W}$ and $\overline{CNTRST}$ = V_{IH}.
3. Transition is measured ±200mV from Low or High-impedance voltage with the Output Test Load (Figure 2).
4. $\overline{CE}_0$ and $\overline{ADS}$ = V_{IL}; CE_1 and $\overline{CNTRST}$ = V_{IH}.
5. $\overline{OE}$ = V_{IL} for the Right Port, which is being read from. $\overline{OE}$ = V_{IH} for the Left Port, which is being written to.
6. If $t_{CCS} \leq$ maximum specified, then data from right port READ is not valid until the maximum specified for t_{CWDD}.
   If t_{CCS} > maximum specified, then data from right port READ is not valid until $t_{CCS} + t_{CD1}$. t_{CWDD} does not apply in this case.
7. All timing is the same for both Left and Right ports. Port "A" may be either Left or Right port. Port "B" is the opposite from Port "A".

Timing Waveform of Pipelined Read-to-Write-to-Read ($\overline{OE}$ = VIL)(3)

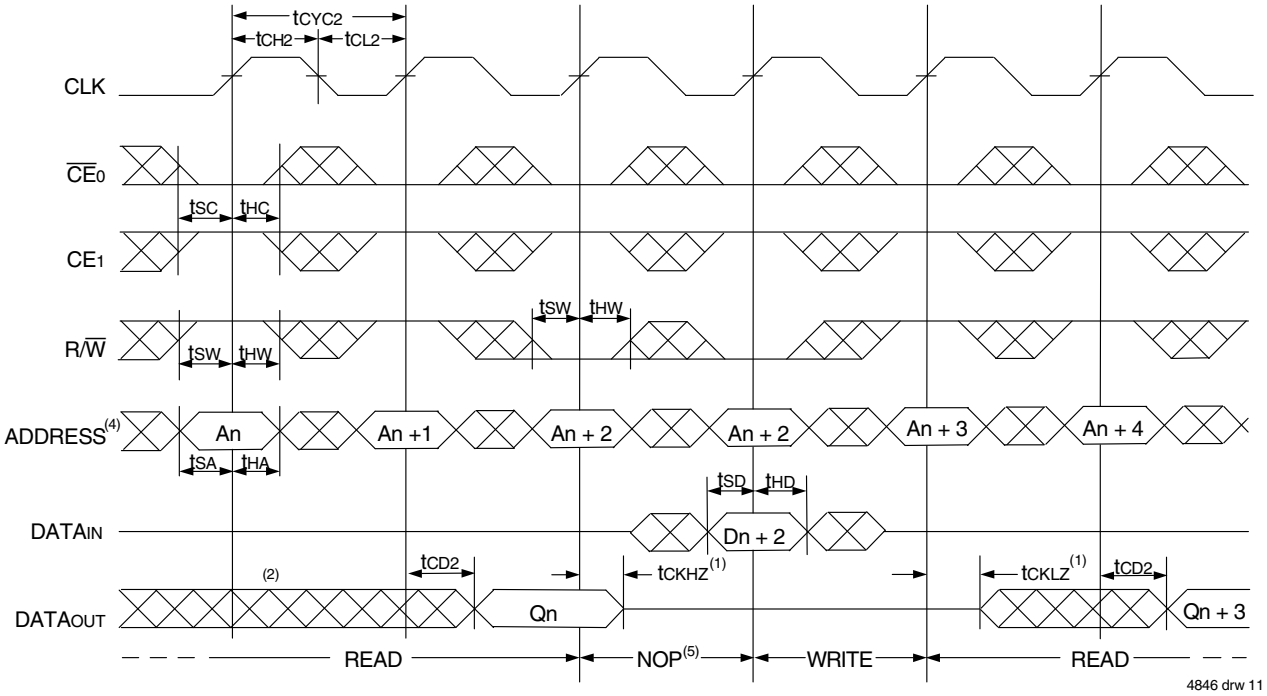

Timing Waveforn of Pipelined Read-to-Write-to-Read ($\overline{OE}$ Controlled)(3)

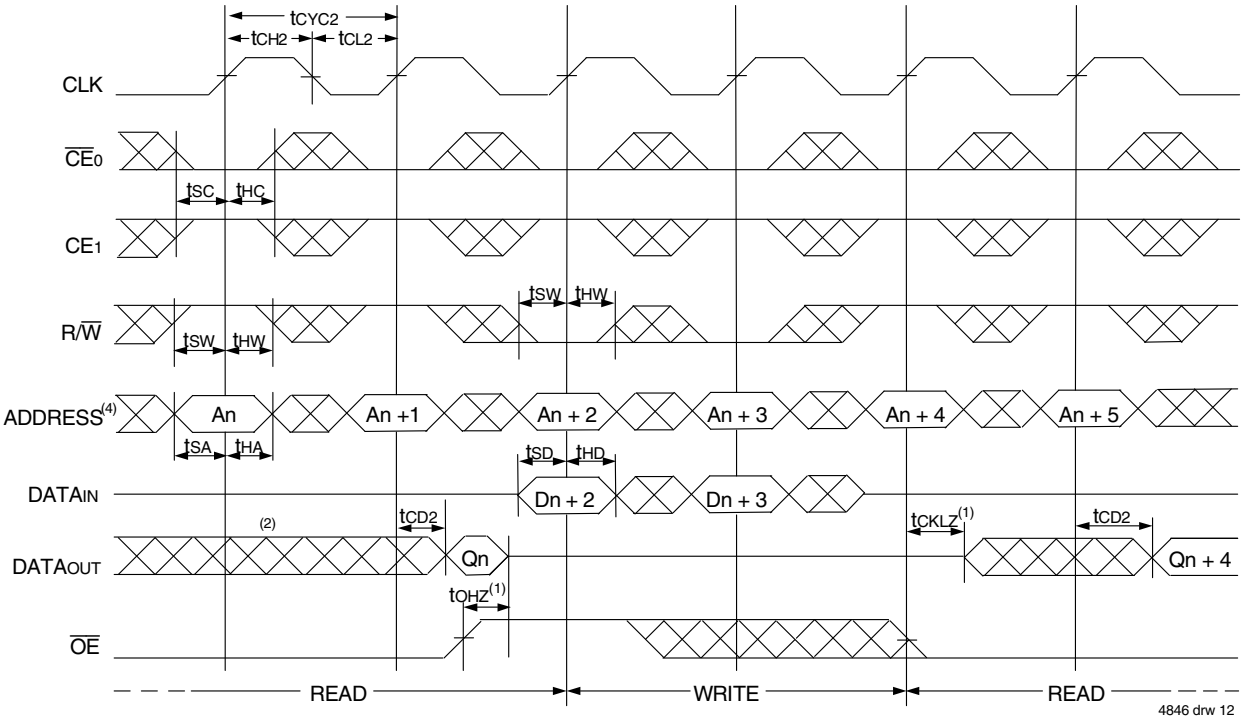

NOTES:

1. Transition is measured 0mV from Low or High-impedance voltage with the Output Test Load (Figure 2).
2. Output state (High, Low, or High-impedance) is determined by the previous cycle control signals.
3. $\overline{CE_0}$ and $\overline{ADS}$ = VIL; CE1 and $\overline{CNTRST}$ = VIH. "NOP" is "No Operation".
4. Addresses do not have to be accessed sequentially since $\overline{ADS}$ = VIL constantly loads the address on the rising edge of the CLK; numbers are for reference use only.
5. "NOP" is "No Operation." Data in memory at the selected address may be corrupted and should be rewritten to guarantee data integrity.

Timing Waveform of Flow-Through Read-to-Write-to-Read ($\overline{OE}$ = VIL)(3)

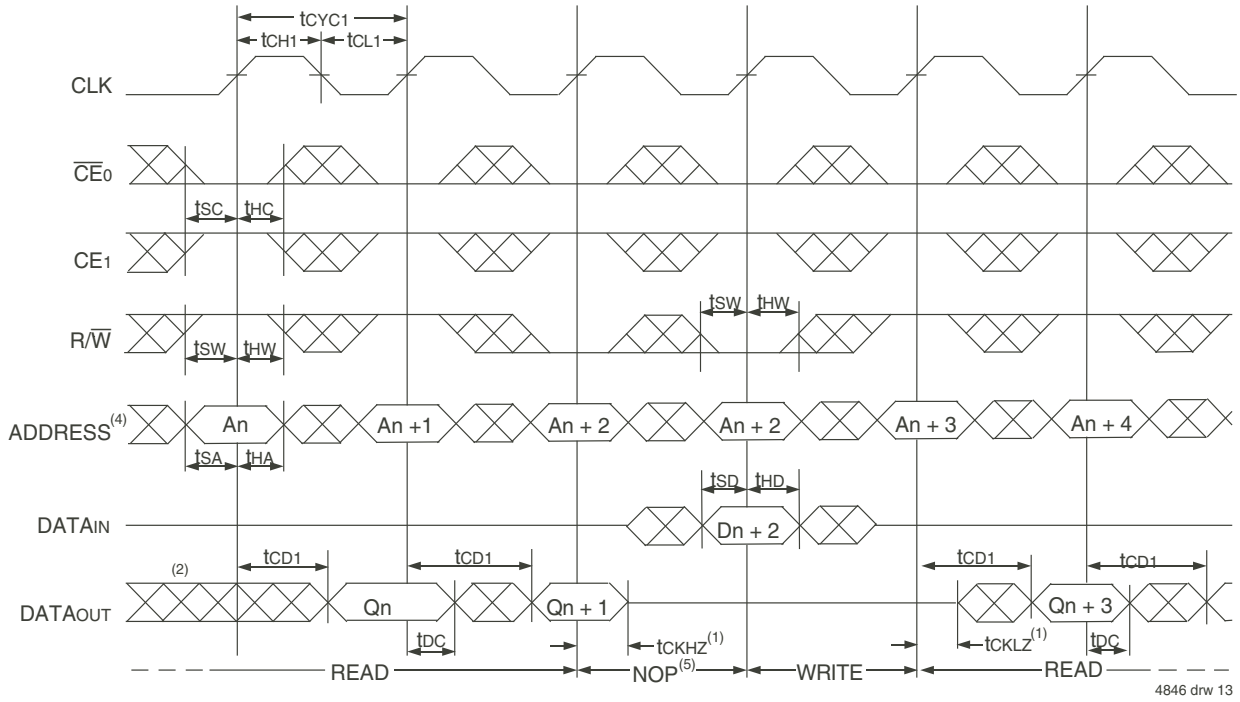

Timing Waveform of Flow-Through Read-to-Write-to-Read ($\overline{OE}$ Controlled)(3)

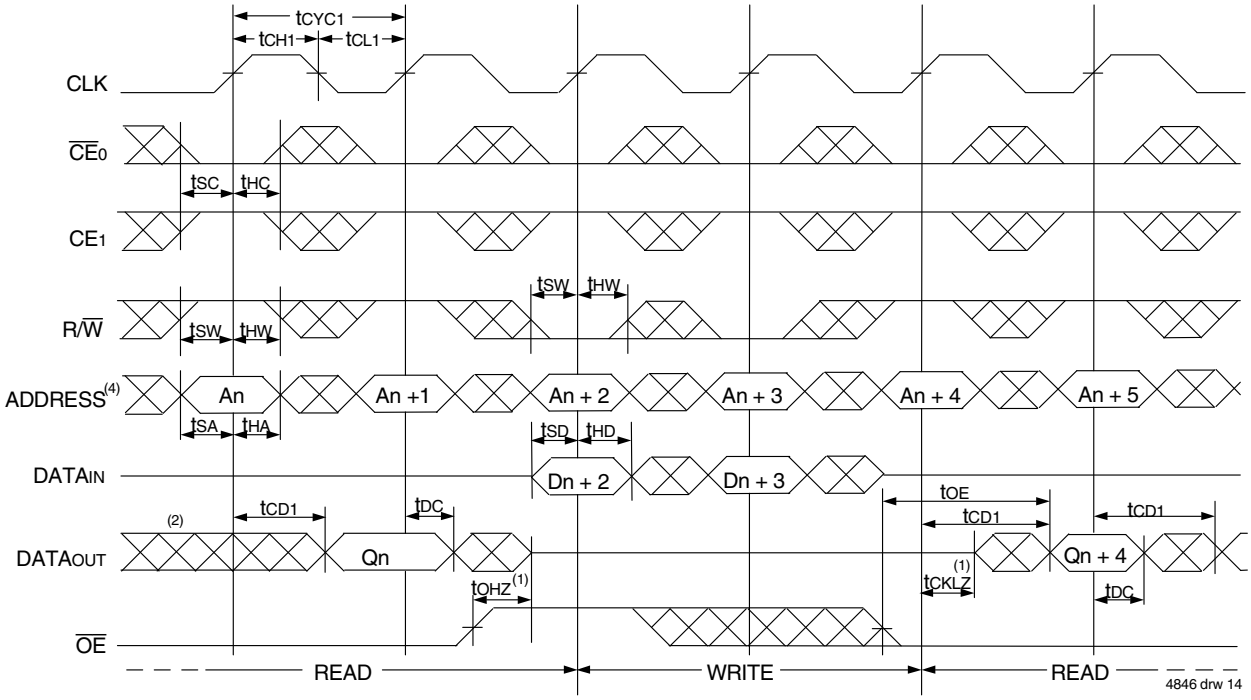

NOTES:

1. Transition is measured 0mV from Low or High-impedance voltage with the Output Test Load (Figure 2).
2. Output state (High, Low, or High-impedance is determined by the previous cycle control signals.
3. $\overline{CE_0}$ and $\overline{ADS}$ = VIL; CE1 and $\overline{CNTRST}$ = VIH. "NOP" is "No Operation".
4. Addresses do not have to be accessed sequentially since $\overline{ADS}$ = VIL constantly loads the address on the rising edge of the CLK; numbers are for reference use only.
5. "NOP" is "No Operation." Data in memory at the selected address may be corrupted and should be rewritten to guarantee data integrity.

Timing Waveform of Pipelined Read with Address Counter Advance(1)

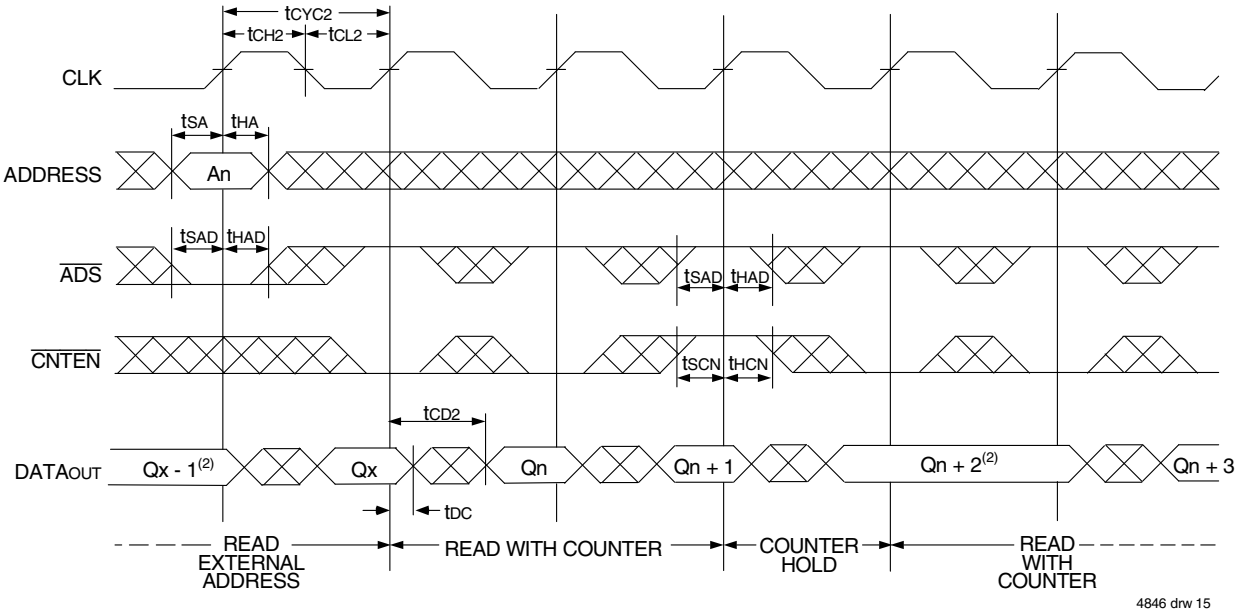

Timing Waveform of Flow-Through Read with Address Counter Advance(1)

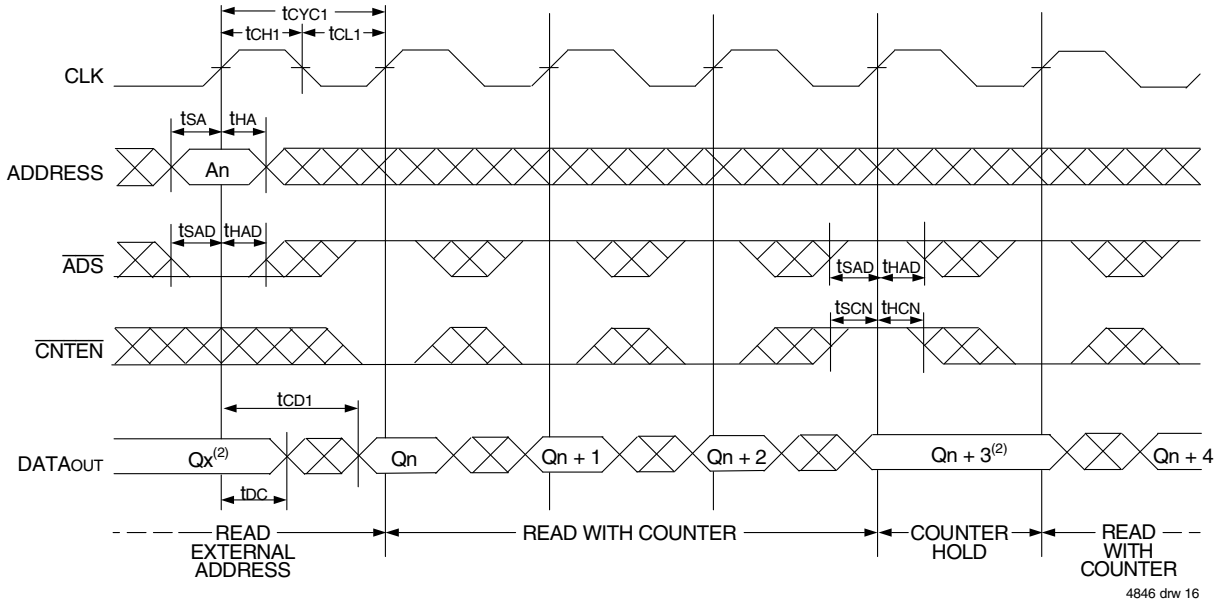

NOTES:

1. $\overline{CE_0}$ and $\overline{OE}$ = V_{IL}; CE_1, R/$\overline{W}$, and $\overline{CNTRST}$ = V_{IH}.
2. If there is no address change via $\overline{ADS}$ = V_{IL} (loading a new address) or $\overline{CNTEN}$ = V_{IL} (advancing the address), i.e. $\overline{ADS}$ = V_{IH} and $\overline{CNTEN}$ = V_{IH}, then the data output remains constant for subsequent clocks.

Timing Waveform of Write with Address Counter Advance (Flow-Through or Pipelined Outputs)(1)

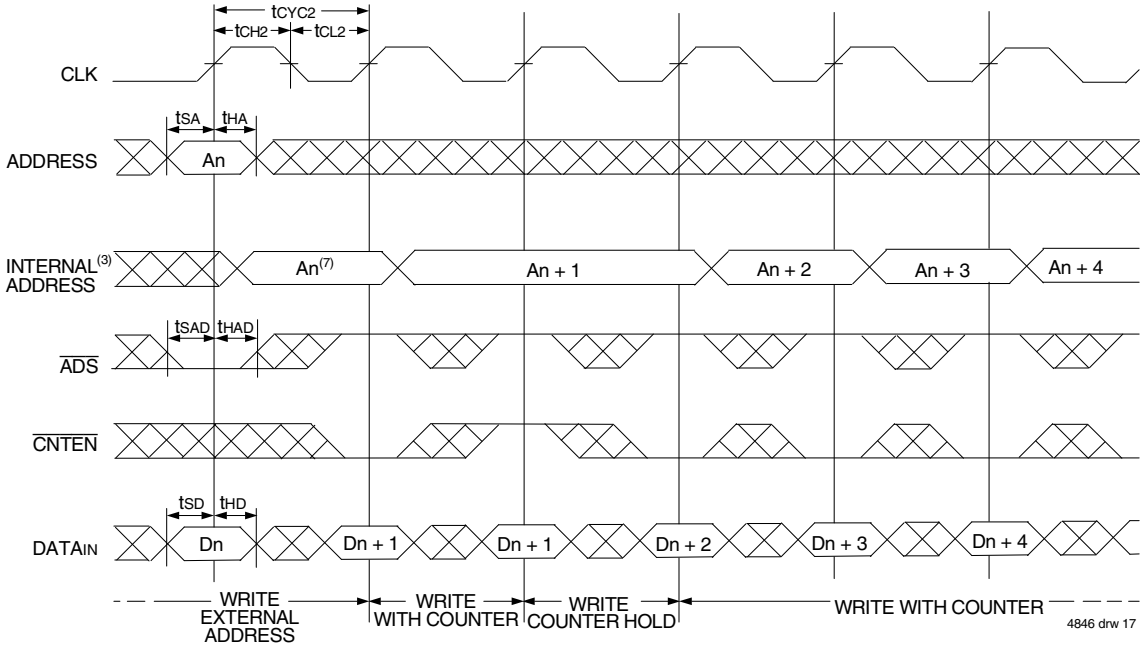

Timing Waveform of Counter Reset (Pipelined Outputs)(2)

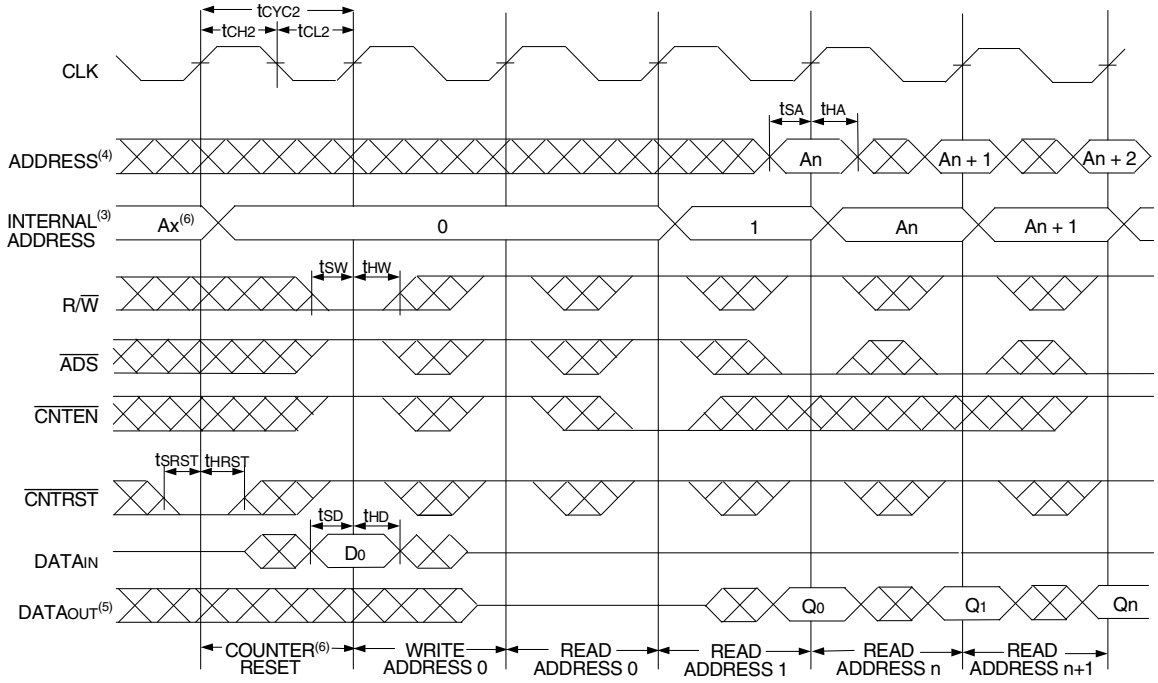

NOTES:
1. $\overline{CE_0}$ and R/$\overline{W}$ = V_{IL}; CE_1 and $\overline{CNTRST}$ = V_{IH}.
2. $\overline{CE_0}$ = V_{IL}; CE_1 = V_{IH}.
3. The "Internal Address" is equal to the "External Address" when $\overline{ADS}$ = V_{IL} and equals the counter output when $\overline{ADS}$ = V_{IH}.
4. Addresses do not have to be accessed sequentially since $\overline{ADS}$ = V_{IL} constantly loads the address on the rising edge of the CLK; numbers are for reference use only.
5. Output state (High, Low, or High-impedance) is determined by the previous cycle control signals.
6. No dead cycle exists during counter reset. A READ or WRITE cycle may be coincidental with the counter reset cycle.
7. $\overline{CNTEN}$ = V_{IL} advances Internal Address from 'An' to 'An +1'. The transition shown indicates the time required for the counter to advance. The 'An +1' Address is written to during this cycle.

A Functional Description

The IDT709099 provides a true synchronous Dual-Port Static RAM interface. Registered inputs provide minimal set-up and hold times on address, data, and all critical control inputs. All internal registers are clocked on the rising edge of the clock signal, however, the self-timed internal write pulse is independent of the LOW to HIGH transition of the clock signal.

An asynchronous output enable is provided to ease asynchronous bus interfacing. Counter enable inputs are also provided to stall the operation of the address counters for fast interleaved memory applications.

$\overline{CE}_0 = V_{IL}$ or $CE_1 = V_{IL}$ for one clock cycle will power down the internal circuitry to reduce static power consumption. Multiple chip enables allow easier banking of multiple IDT709099's for depth expansion configurations. When the Pipelined output mode is enabled, two cycles are required with $\overline{CE}_0 = V_{IL}$ and $CE_1 = V_{IH}$ to reactivate the outputs.

Depth and Width Expansion

The IDT709099 features dual chip enables (refer to Truth Table I) in order to facilitate rapid and simple depth expansion with no requirements for external logic. Figure 4 illustrates how to control the various chip enables in order to expand two devices in depth.

The 709099 can also be used in applications requiring expanded width, as indicated in Figure 4. Since the banks are allocated at the discretion of the user, the external controller can be set up to drive the input signals for the various devices as required to allow for 16-bit or wider applications.

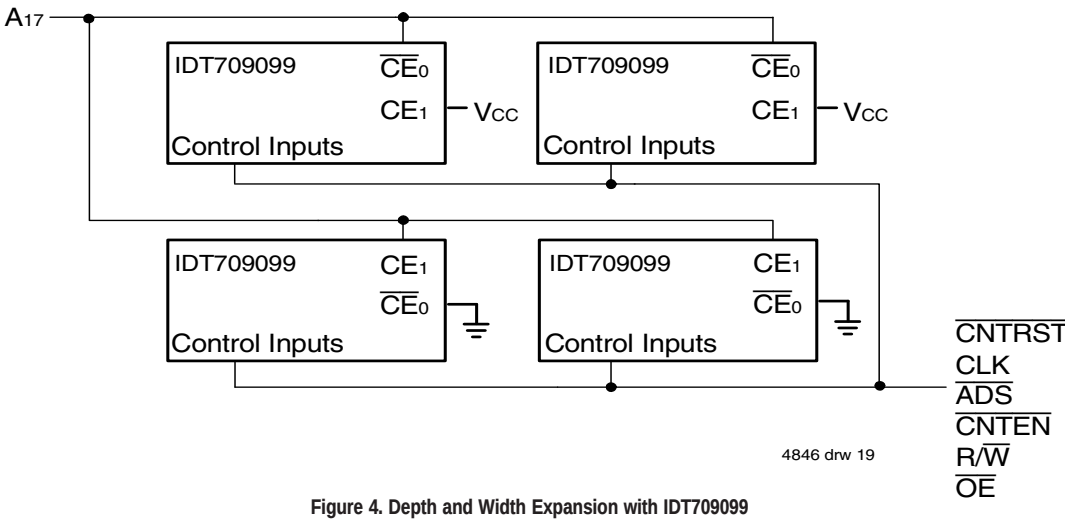

Figure 4. Depth and Width Expansion with IDT709099

Ordering Information

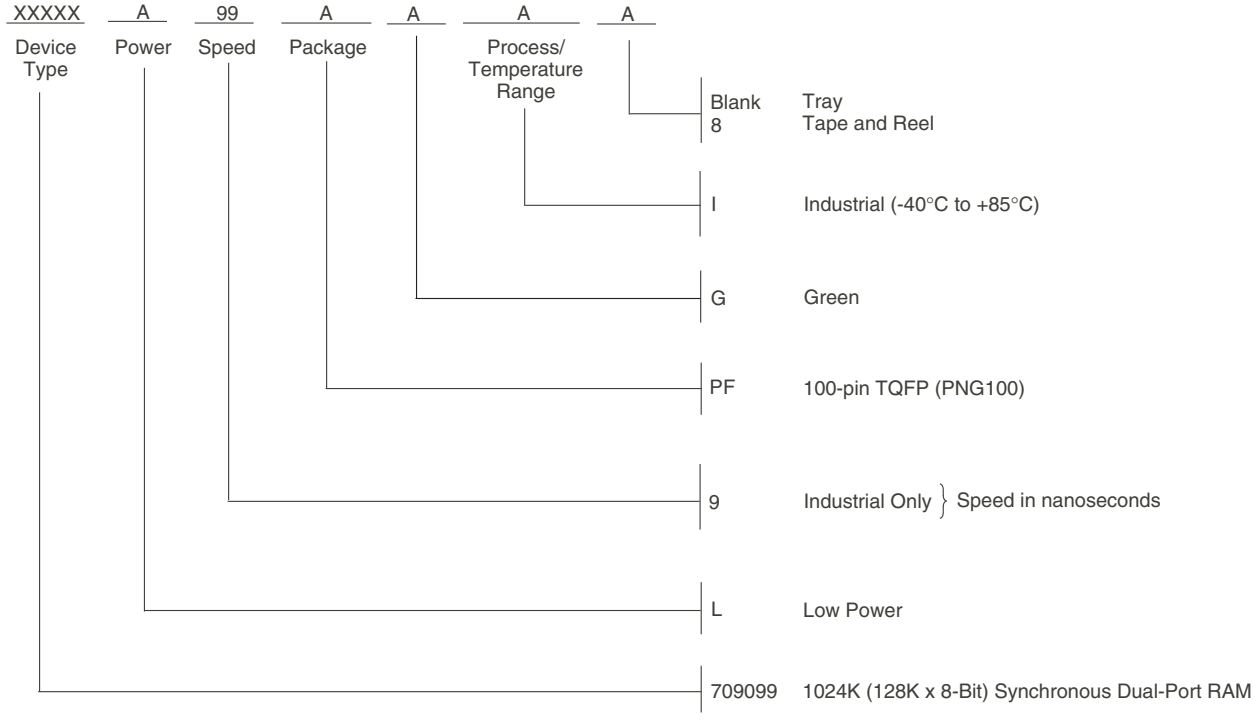

4846 drw 20

NOTES:

LEAD FINISH (SnPb) parts are Obsolete. Product Discontinuation Notice - PDN# SP-17-02

Note that information regarding the recently obsoleted commercial speed grade is included in this datasheet for customer convenience.

Orderable Part Information

Speed (ns)	Orderable Part ID	Pkg. Code	Pkg. Type	Temp. Grade
9	709099L9PFGI	PNG100	TQFP	I
	709099L9PFGI8	PNG100	TQFP	I

Datasheet Document History

9/30/99:		Initial Public Release
11/10/99:		Replaced IDT logo
12/22/99:	Page 1	Added missing diamond
1/5/01:	Page 3	Changed information in Truth Table II
	Page 4	Increased storage temperature parameter
		Clarified T_A parameter
	Page 5	DC Electrical parameters–changed wording from "open" to "disabled"
		Added overbar to CE in notes
		Changed ±200mV to 0mV in notes
		Removed Preliminary status
11/09/01:	Page 2	Added date revision for pin configuration
	Page 5 & 7	Added Industrial temp to column heading and values for 9ns speed to DC & AC Electrical Characteristics
	Page 15	Added Industrial temp offering to 9ns ordering information
	Page 4, 5 & 7	Removed Industrial temp footnote from all tables

Datasheet Document History (continued)

01/29/09:	Page 15	Removed "IDT" from orderable part number
08/20/10:	Page 1	Added green parts availability to features
	Page 15	Added green indicator to ordering information
	Page 7	In order to correct the header notes of the AC Elect Chars Table and align them with the Industrial temp range values located in the table, the commercial T_A header note has been removed
	Pages 8-11	In order to correct the footnotes of timing diagrams, $\overline{CNTEN}$ has been removed to reconcile the footnotes with the $\overline{CNTEN}$ logic definition found in Truth Table II - Address Counter Control
	Page 1	Removed the 7.5ns speed grade from the commercial offering
	Page 5	Removed the 7ns speed grade from the commercial offering in the DC Electrical Characteristics table
	Page 7	Removed the 7ns speed grade from the commercial offering in the AC Electrical Characteristics table
	Page 15	Removed the 7ns speed grade from the commercial offering in the ordering information
04/08/15:	Page 1	Numbers for Pipelined Output Mode updated: includes clock to data out, cycle time and operation
	Page 2	Removed IDT in reference to fabrication
	Page 2 &16	The package code PN100-1 changed to PN100 to match standard package codes
	Page 6	Corrected typo in the Typical Output Derating(Lumped Capitive Load) diagram
	Page 16	Added Tape and Reel to Ordering Information
01/24/18:		Product Discontinuation Notice - PDN# SP-17-02 Last time buy expires June 15, 2018
08/13/19:	Page 1 & 15	Deleted obsolete Commercial grades 9/12ns
	Page 2	Rotated PNG100 TQFP pin configuration to accurately reflect pin 1 orientation
	Page 15	Added Orderable Part Information table
11/29/21:	Page 1 -17	Source file updated to reflect previous Corporate Marketing rebranding Updated header by removing obsoleted commercial temperature range
	Page 2	Updated package code
	Page 15	Removed obsoleted commercial entry from Ordering Information

IMPORTANT NOTICE AND DISCLAIMER

RENESAS ELECTRONICS CORPORATION AND ITS SUBSIDIARIES (“RENESAS”) PROVIDES TECHNICAL SPECIFICATIONS AND RELIABILITY DATA (INCLUDING DATASHEETS), DESIGN RESOURCES (INCLUDING REFERENCE DESIGNS), APPLICATION OR OTHER DESIGN ADVICE, WEB TOOLS, SAFETY INFORMATION, AND OTHER RESOURCES “AS IS” AND WITH ALL FAULTS, AND DISCLAIMS ALL WARRANTIES, EXPRESS OR IMPLIED, INCLUDING, WITHOUT LIMITATION, ANY IMPLIED WARRANTIES OF MERCHANTABILITY, FITNESS FOR A PARTICULAR PURPOSE, OR NON-INFRINGEMENT OF THIRD PARTY INTELLECTUAL PROPERTY RIGHTS.

These resources are intended for developers skilled in the art designing with Renesas products. You are solely responsible for (1) selecting the appropriate products for your application, (2) designing, validating, and testing your application, and (3) ensuring your application meets applicable standards, and any other safety, security, or other requirements. These resources are subject to change without notice. Renesas grants you permission to use these resources only for development of an application that uses Renesas products. Other reproduction or use of these resources is strictly prohibited. No license is granted to any other Renesas intellectual property or to any third party intellectual property. Renesas disclaims responsibility for, and you will fully indemnify Renesas and its representatives against, any claims, damages, costs, losses, or liabilities arising out of your use of these resources. Renesas' products are provided only subject to Renesas' Terms and Conditions of Sale or other applicable terms agreed to in writing. No use of any Renesas resources expands or otherwise alters any applicable warranties or warranty disclaimers for these products.

(Rev.1.0 Mar 2020)

Corporate Headquarters

TOYOSU FORESIA, 3-2-24 Toyosu,
Koto-ku, Tokyo 135-0061, Japan
www.renesas.com

Contact Information

For further information on a product, technology, the most up-to-date version of a document, or your nearest sales office, please visit:
www.renesas.com/contact/

Trademarks

Renesas and the Renesas logo are trademarks of Renesas Electronics Corporation. All trademarks and registered trademarks are the property of their respective owners.

© 2020 Renesas Electronics Corporation. All rights reserved.