HIGH-SPEED 16/8K x 9 SYNCHRONOUS PIPELINED DUAL-PORT STATIC RAM

709169/59L

LEAD FINISH (SnPb) ARE IN EOL PROCESS - LAST TIME BUY EXPIRES JUNE 15, 2018

OBSOLETE PART
NOT RECOMMENDED FOR
NEW DESIGNS

Features

- **True Dual-Ported memory cells which allow simultaneous access of the same memory location**
- **High-speed clock to data access**
  - *Commercial: 6.5/7.5/9ns (max.)*
  - *Industrial: 7.5ns (max.)*
- **Low-power operation**
  - *IDT709169/59L*
  - *Active: 925mW (typ.)*
  - *Standby: 2.5mW (typ.)*
- **Flow-Through or Pipelined output mode on either Port via the $\overline{FT}$/PIPE pins**
- **Counter enable and reset features**
- **Dual chip enables allow for depth expansion without additional logic**
- **Full synchronous operation on both ports**
  - *3.5ns setup to clock and 0ns hold on all control, data, and address inputs*
  - *Data input, address, and control registers*
  - *Fast 6.5ns clock to data out in the Pipelined output mode*
  - *Self-timed write allows fast cycle time*
  - *10ns cycle time, 100MHz operation in Pipelined output mode*
- **TTL- compatible, single 5V (±10%) power supply**
- **Industrial temperature range (–40°C to +85°C) is available for 83MHz**
- **Available in a 100-pin Thin Quad Flatpack (TQFP) and 100-pin fine pitch Ball Grid Array (fpBGA) packages.**

Functional Block Diagram

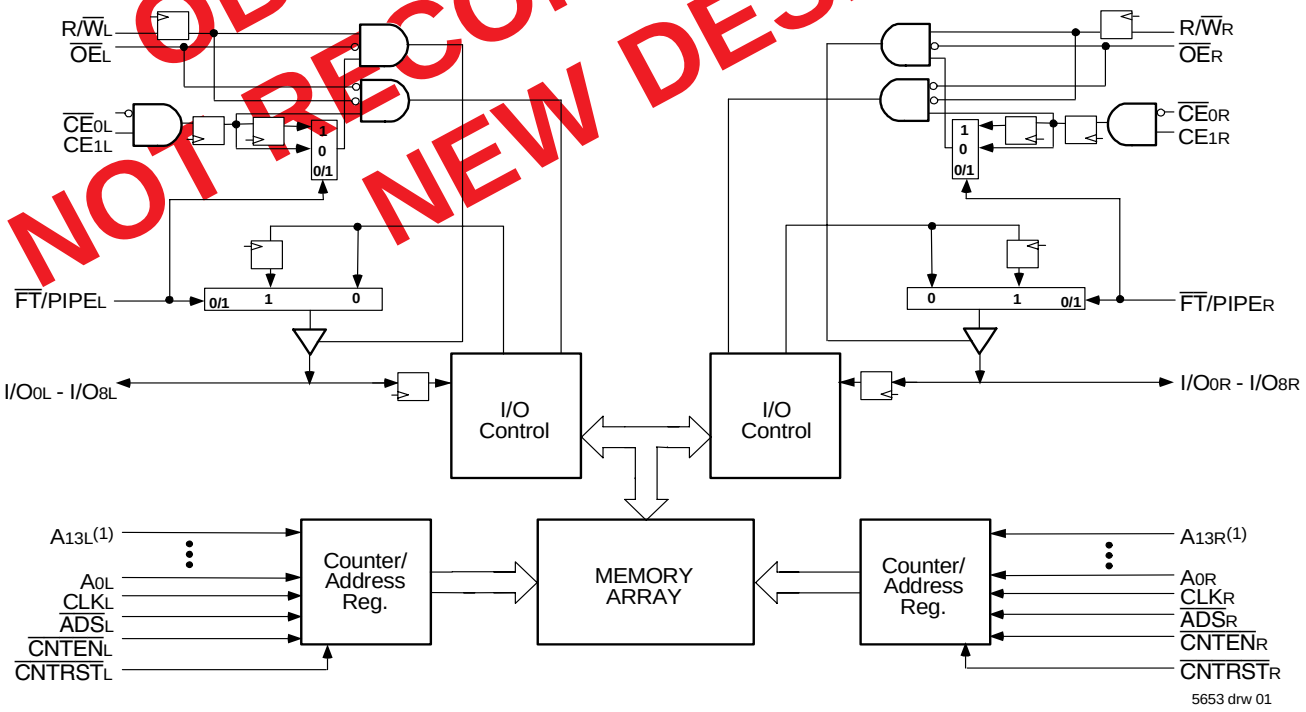

NOTE:
1. A_{13} is a NC for IDT709159.

APRIL 2019

DSC-5653/4

© 2019 Renesas Electronics Corporation

Description

The IDT709169/59 is a high-speed 16/8K x 9 bit synchronous Dual-Port RAM. The memory array utilizes Dual-Port memory cells to allow simultaneous access of any address from both ports. Registers on control, data, and address inputs provide minimal setup and hold times. The timing latitude provided by this approach allows systems to be designed with very short cycle times.

With an input data register, the IDT709169/59 has been optimized for applications having unidirectional or bidirectional data flow in bursts. An automatic power down feature, controlled by $\overline{CE}_0$ and CE_1, permits the on-chip circuitry of each port to enter a very low standby power mode. Fabricated using IDT's CMOS high-performance technology, these devices typically operate on only 925mW of power.

Pin Configurations[1,2,3,4]

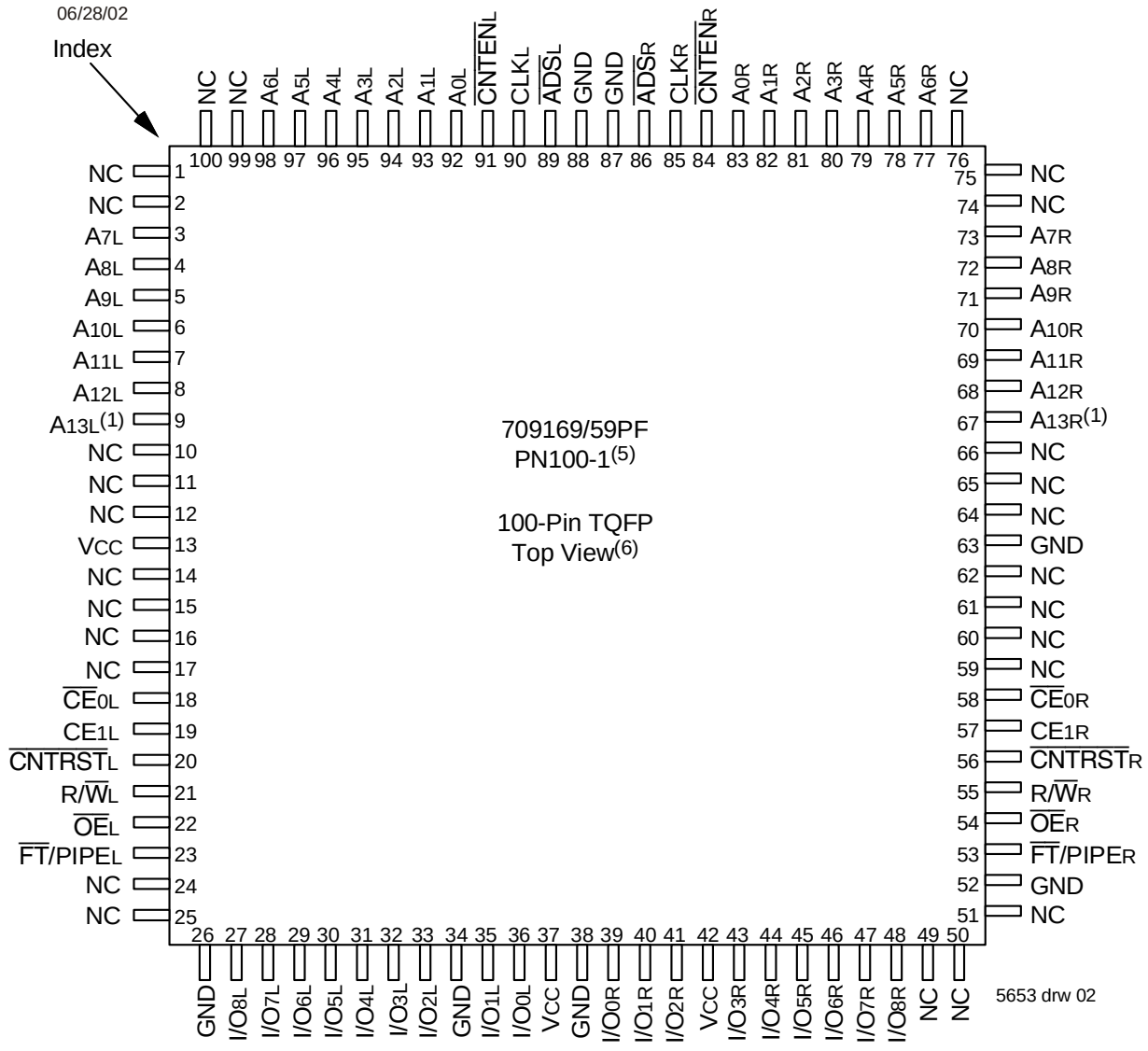

NOTES:
1. A_{13} is a NC for IDT709159.
2. All V_{CC} pins must be connected to power supply.
3. All GND pins must be connected to ground supply.
4. Package body is approximately 14mm x 14mm x 1.4mm.
5. This package code is used to reference the package diagram.
6. This text does not indicate orientation of the actual part-marking.

© 2019 Renesas Electronics Corporation

Pin Configurations (con't.)[1,2,3,4]

709169/59BF
BF100[5]

100-Pin fpBGA
Top View[6]

06/28/02

A1 A_{6R}	A2 A_{9R}	A3 A_{12R}	A4 NC	A5 GND	A6 GND	A7 NC	A8 $R/\overline{W}_R$	A9 GND	A10 NC
B1 A_{4R}	B2 A_{5R}	B3 A_{8R}	B4 A_{10R}	B5 NC	B6 NC	B7 NC	B8 $\overline{OE}_R$	B9 NC	B10 I/O_{6R}
C1 A_{3R}	C2 NC	C3 NC	C4 A_{7R}	C5 NC	C6 $\overline{CE}_{0R}$	C7 CE_{1R}	C8 $PL/\overline{FT}_R$	C9 I/O_{7R}	C10 I/O_{3R}
D1 A_{0R}	D2 CLK_R	D3 A_{1R}	D4 A_{2R}	D5 A_{11R}	D6 A_{13R}[1]	D7 $\overline{CNTRST}_R$	D8 I/O_{8R}	D9 I/O_{5R}	D10 I/O_{1R}
E1 GND	E2 $\overline{ADS}_R$	E3 $\overline{CNTEN}_R$	E4 A_{1L}	E5 $\overline{ADS}_L$	E6 GND	E7 I/O_{4R}	E8 I/O_{2R}	E9 I/O_{0R}	E10 V_{CC}
F1 GND	F2 CLK_L	F3 A_{0L}	F4 A_{3L}	F5 V_{CC}	F6 GND	F7 V_{CC}	F8 I/O_{2L}	F9 I/O_{1L}	F10 I/O_{0L}
G1 $\overline{CNTEN}_L$	G2 NC	G3 A_{5L}	G4 A_{12L}	G5 NC	G6 $R/\overline{W}_L$	G7 NC	G8 I/O_{4L}	G9 GND	G10 I/O_{3L}
H1 A_{2L}	H2 A_{4L}	H3 A_{9L}	H4 A_{13L}[1]	H5 NC	H6 CE_{1L}	H7 NC	H8 I/O_{7L}	H9 I/O_{6L}	H10 I/O_{5L}
J1 NC	J2 A_{7L}	J3 A_{10L}	J4 NC	J5 NC	J6 NC	J7 $\overline{OE}_L$	J8 GND	J9 GND	J10 I/O_{8L}
K1 A_{6L}	K2 A_{8L}	K3 A_{11L}	K4 NC	K5 V_{CC}	K6 V_{CC}	K7 $\overline{CE}_{0L}$	K8 $\overline{CNTRST}_L$	K9 $PL/\overline{FT}_L$	K10 NC

5653 drw 03

NOTES:
1. A_{13} is a NC for IDT709159.
2. All V_{CC} pins must be connected to power supply.
3. All GND pins must be connected to ground supply.
4. Package body is approximately 10mm x 10mm x 1.4mm with 0.8mm ball pitch.
5. This package code is used to reference the package diagram.
6. This text does not indicate orientation of the actual part-marking.

© 2019 Renesas Electronics Corporation

Pin Names

Left Port	Right Port	Names
$\overline{CE}_{0L}$, CE_{1L}	$\overline{CE}_{0R}$, CE_{1R}	Chip Enables
$R/\overline{W}_L$	$R/\overline{W}_R$	Read/Write Enable
$\overline{OE}_L$	$\overline{OE}_R$	Output Enable
A_{0L} - A_{13L}(1)	A_{0R} - A_{13R}(1)	Address
I/O_{0L} - I/O_{8L}	I/O_{0R} - I/O_{8R}	Data Input/Output
CLK_L	CLK_R	Clock
$\overline{ADS}_L$	$\overline{ADS}_R$	Address Strobe
$\overline{CNTEN}_L$	$\overline{CNTEN}_R$	Counter Enable
$\overline{CNTRST}_L$	$\overline{CNTRST}_R$	Counter Reset
$\overline{FT}/PIPE_L$	$\overline{FT}/PIPE_R$	Flow-Through/Pipeline
V_{CC}		Power (5V)
GND		Ground (0V)

5653 tbl 01

NOTE:
1. A_{13} is a NC for IDT709159.

Truth Table I—Read/Write and Enable Control(1,2,3)

$\overline{OE}$	CLK	$\overline{CE}_0$	CE_1	$R/\overline{W}$	I/O_{0-8}	Mode
X	↑	H	X	X	High-Z	Deselected—Power Down
X	↑	X	L	X	High-Z	Deselected—Power Down
X	↑	L	H	L	$DATA_{IN}$	Write
L	↑	L	H	H	$DATA_{OUT}$	Read
H	X	L	H	X	High-Z	Outputs Disabled

5653 tbl 02

NOTES:
1. "H" = V_{IH}, "L" = V_{IL}, "X" = Don't Care.
2. $\overline{ADS}$, $\overline{CNTEN}$, $\overline{CNTRST}$ = X.
3. $\overline{OE}$ is an asynchronous input signal.

© 2019 Renesas Electronics Corporation

Truth Table II—Address Counter Control(1,2)

External Address	Previous Internal Address	Internal Address Used	CLK	$\overline{ADS}$	$\overline{CNTEN}$	$\overline{CNTRST}$	I/O(3)	MODE
An	X	An	↑	L(4)	X	H	DI/O (n)	External Address Used
X	An	An + 1	↑	H	L(5)	H	DI/O(n+1)	Counter Enabled—Internal Address generation
X	An + 1	An + 1	↑	H	H	H	DI/O(n+1)	External Address Blocked—Counter disabled (An + 1 reused)
X	X	A0	↑	X	X	L(4)	DI/O(0)	Counter Reset to Address 0

5653 tbl 03

NOTES:
1. "H" = V_{IH}, "L" = V_{IL}, "X" = Don't Care.
2. $\overline{CE_0}$ and $\overline{OE}$ = V_{IL}; CE_1 and R/$\overline{W}$ = V_{IH}.
3. Outputs configured in Flow-Through Output mode: if outputs are in Pipelined mode the data out will be delayed by one cycle.
4. $\overline{ADS}$ and $\overline{CNTRST}$ are independent of all other signals including $\overline{CE_0}$ and CE_1.
5. The address counter advances if $\overline{CNTEN}$ = V_{IL} on the rising edge of CLK, regardless of all other signals including $\overline{CE_0}$ and CE_1.

Recommended Operating Temperature and Supply Voltage

Grade	Ambient Temperature(1)	GND	Vcc
Commercial	0°C to +70°C	0V	5.0V ± 10%
Industrial	-40°C to +85°C	0V	5.0V ± 10%

5653 tbl 04

NOTES:
1. This is the parameter T_A. This is the "instant on" case temperature.

Recommended DC Operating Conditions

Symbol	Parameter	Min.	Typ.	Max.	Unit
V_{CC}	Supply Voltage	4.5	5.0	5.5	V
GND	Ground	0	0	0	V
V_{IH}	Input High Voltage	2.2	—	6.0(1)	V
V_{IL}	Input Low Voltage	-0.5(2)	—	0.8	V

5653 tbl 05

NOTES:
1. V_{TERM} must not exceed V_{CC} + 10%.
2. $V_{IL} \geq$ -1.5V for pulse width less than 10ns.

Absolute Maximum Ratings(1)

Symbol	Rating	Commercial & Industrial	Unit
V_{TERM}(2)	Terminal Voltage with Respect to GND	-0.5 to +7.0	V
T_{BIAS}	Temperature Under Bias	-55 to +125	°C
T_{STG}	Storage Temperature	-65 to +150	°C
I_{OUT}	DC Output Current	50	mA

5653 tbl 06

NOTES:
1. Stresses greater than those listed under ABSOLUTE MAXIMUM RATINGS may cause permanent damage to the device. This is a stress rating only and functional operation of the device at these or any other conditions above those indicated in the operational sections of this specification is not implied. Exposure to absolute maximum rating conditions for extended periods may affect reliability.
2. V_{TERM} must not exceed V_{CC} + 10% for more than 25% of the cycle time or 10ns maximum, and is limited to $\leq$ 20mA for the period of $V_{TERM} \geq V_{CC}$ + 10%.

Capacitance(1)

(T_A = +25°C, f = 1.0MHz)

Symbol	Parameter	Conditions(2)	Max.	Unit
C_{IN}	Input Capacitance	V_{IN} = 3dV	9	pF
C_{OUT}(3)	Output Capacitance	V_{OUT} = 3dV	10	pF

5653 tbl 07

NOTES:
1. These parameters are determined by device characterization, but are not production tested.
2. 3dV references the interpolated capacitance when the input and output switch from 0V to 3V or from 3V to 0V.
3. C_{OUT} also references $C_{I/O}$.

© 2019 Renesas Electronics Corporation

DC Electrical Characteristics Over the Operating Temperature Supply Voltage Range (V_{CC} = 5.0V ± 10%)

Symbol	Parameter	Test Conditions	709169/59L		Unit
			Min.	Max.	
$\|I_{LI}\|$	Input Leakage Current[1]	V_{CC} = 5.5V, V_{IN} = 0V to V_{CC}	—	5	µA
$\|I_{LO}\|$	Output Leakage Current	$\overline{CE}_0$ = V_{IH} or CE_1 = V_{IL}, V_{OUT} = 0V to V_{CC}	—	5	µA
V_{OL}	Output Low Voltage	I_{OL} = +4mA	—	0.4	V
V_{OH}	Output High Voltage	I_{OH} = -4mA	2.4	—	V

5653 tbl 08

NOTE:
1. At Vcc ≤ 2.0V input leakages are undefined.

DC Electrical Characteristics Over the Operating Temperature and Supply Voltage Range[3] (V_{CC} = 5V ± 10%)

Symbol	Parameter	Test Condition	Version		709169/59L6 Com'l Only		709169/59L7 Com'l & Ind		709169/59L9 Com'l Only		Unit
					Typ.[4]	Max.	Typ.[4]	Max.	Typ.[4]	Max.	
I_{CC}	Dynamic Operating Current (Both Ports Active)	$\overline{CE}_L$ and $\overline{CE}_R$= V_{IL} Outputs Disabled f = f_{MAX}[1]	COM'L	L	230	430	210	400	185	360	mA
			IND	L	—	—	210	440	—	—	
I_{SB1}	Standby Current (Both Ports - TTL Level Inputs)	$\overline{CE}_L$ = $\overline{CE}_R$ = V_{IH} f = f_{MAX}[1]	COM'L	L	45	115	40	105	35	95	mA
			IND	L	—	—	40	120	—	—	
I_{SB2}	Standby Current (One Port - TTL Level Inputs)	$\overline{CE}_{"A"}$ = V_{IL} and $\overline{CE}_{"B"}$ = V_{IH}[3] Active Port Outputs Disabled, f=f_{MAX}[1]	COM'L	L	150	235	135	220	120	205	mA
			IND	L	—	—	135	235	—	—	
I_{SB3}	Full Standby Current (Both Ports - CMOS Level Inputs)	Both Ports CE_R and $\overline{CE}_L$ ≥ V_{CC} - 0.2V V_{IN} ≥ V_{CC} - 0.2V or V_{IN} ≤ 0.2V, f = 0[2]	COM'L	L	0.5	3.0	0.5	3.0	0.5	3.0	mA
			IND	L	—	—	0.5	3.0	—	—	
I_{SB4}	Full Standby Current (One Port - CMOS Level Inputs)	$\overline{CE}_{"A"}$ ≤ 0.2V and $\overline{CE}_{"B"}$ ≥ V_{CC} - 0.2V[5] V_{IN} ≥ V_{CC} - 0.2V or V_{IN} ≤ 0.2V, Active Port Outputs Disabled, f = f_{MAX}[1]	COM'L	L	160	210	130	190	110	170	mA
			IND	L	—	—	130	205	—	—	

5653 tbl 09

NOTES:
1. At f = f_{MAX}, address and control lines (except Output Enable) are cycling at the maximum frequency clock cycle of 1/t_{CYC}, using "AC TEST CONDITIONS" at input levels of GND to 3V.
2. f = 0 means no address, clock, or control lines change. Applies only to input at CMOS level standby.
3. Port "A" may be either left or right port. Port "B" is the opposite from port "A".
4. Vcc = 5V, TA = 25°C for Typ, and are not production tested. $I_{CC\,DC}$(f=0) = 150mA (Typ).
5. CE_X = V_{IL} means $\overline{CE}_{0X}$ = V_{IL} and CE_{1X} = V_{IH}
   CE_X = V_{IH} means $\overline{CE}_{0X}$ = V_{IH} or CE_{1X} = V_{IL}
   CE_X ≤ 0.2V means $\overline{CE}_{0X}$ ≤ 0.2V and CE_{1X} ≥ V_{CC} - 0.2V
   CE_X ≥ V_{CC} - 0.2V means $\overline{CE}_{0X}$ ≥ V_{CC} - 0.2V or CE_{1X} ≤ 0.2V
   "X" represents "L" for left port or "R" for right port.

© 2019 Renesas Electronics Corporation

AC Test Conditions

Input Pulse Levels	GND to 3.0V
Input Rise/Fall Times	2ns Max.
Input Timing Reference Levels	1.5V
Output Reference Levels	1.5V
Output Load	Figures 1, 2 and 3

5653 tbl 10

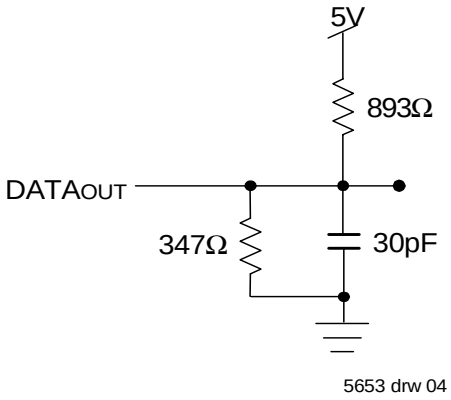

Figure 1. AC Output Test load.

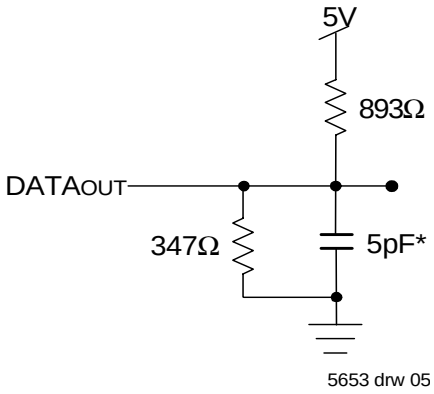

Figure 2. Output Test Load
(For t_{CKLZ}, t_{CKHZ}, t_{OLZ}, and t_{OHZ}).
*Including scope and jig.

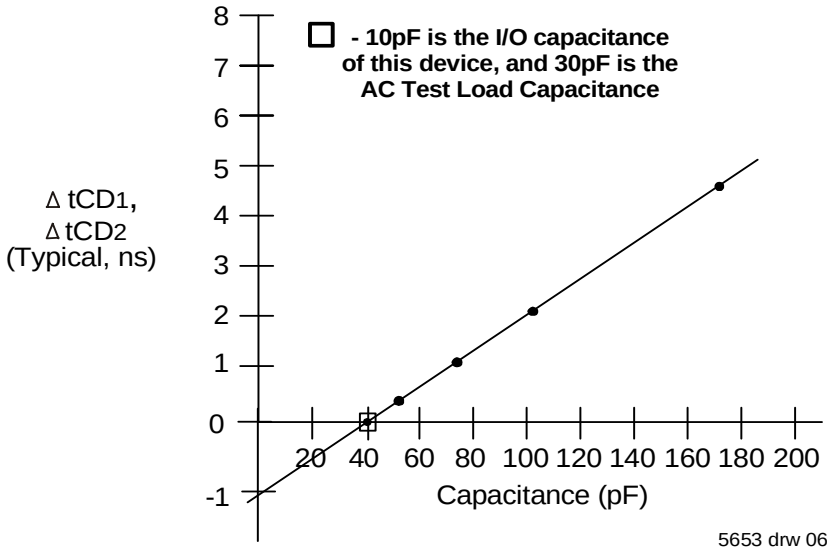

Figure 3. Typical Output Derating (Lumped Capacitive Load).

© 2019 Renesas Electronics Corporation

AC Electrical Characteristics Over the Operating Temperature Range (Read and Write Cycle Timing)[3] (V_{CC} = 5V ± 10%, T_A = 0°C to +70°C)

		709169/59L6 Com'l Only		709169/59L7 Com'l & Ind		709169/59L9 Com'l Only		
Symbol	**Parameter**	**Min.**	**Max.**	**Min.**	**Max.**	**Min.**	**Max.**	**Unit**
t_{CYC1}	Clock Cycle Time (Flow-Through)[2]	19	—	22	—	25	—	ns
t_{CYC2}	Clock Cycle Time (Pipelined)[2]	10	—	12	—	15	—	ns
t_{CH1}	Clock High Time (Flow-Through)[2]	6.5	—	7.5	—	12	—	ns
t_{CL1}	Clock Low Time (Flow-Through)[2]	6.5	—	7.5	—	12	—	ns
t_{CH2}	Clock High Time (Pipelined)[2]	4	—	5	—	6	—	ns
t_{CL2}	Clock Low Time (Pipelined)[2]	4	—	5	—	6	—	ns
t_R	Clock Rise Time	—	3	—	3	—	3	ns
t_F	Clock Fall Time	—	3	—	3	—	3	ns
t_{SA}	Address Setup Time	3.5	—	4	—	4	—	ns
t_{HA}	Address Hold Time	0	—	0	—	1	—	ns
t_{SC}	Chip Enable Setup Time	3.5	—	4	—	4	—	ns
t_{HC}	Chip Enable Hold Time	0	—	0	—	1	—	ns
t_{SB}	Byte Enable Setup Time	3.5	—	4	—	4	—	ns
t_{HB}	Byte Enable Hold Time	0	—	0	—	1	—	ns
t_{SW}	R/$\overline{W}$ Setup Time	3.5	—	4	—	4	—	ns
t_{HW}	R/$\overline{W}$ Hold Time	0	—	0	—	1	—	ns
t_{SD}	Input Data Setup Time	3.5	—	4	—	4	—	ns
t_{HD}	Input Data Hold Time	0	—	0	—	1	—	ns
t_{SAD}	$\overline{ADS}$ Setup Time	3.5	—	4	—	4	—	ns
t_{HAD}	$\overline{ADS}$ Hold Time	0	—	0	—	1	—	ns
t_{SCN}	$\overline{CNTEN}$ Setup Time	3.5	—	4	—	4	—	ns
t_{HCN}	$\overline{CNTEN}$ Hold Time	0	—	0	—	1	—	ns
t_{SRST}	$\overline{CNTRST}$ Setup Time	3.5	—	4	—	4	—	ns
t_{HRST}	$\overline{CNTRST}$ Hold Time	0	—	0	—	1	—	ns
t_{OE}	Output Enable to Data Valid	—	6.5	—	7.5	—	9	ns
t_{OLZ}	Output Enable to Output Low-Z[1]	2	—	2	—	2	—	ns
t_{OHZ}	Output Enable to Output High-Z[1]	1	7	1	7	1	7	ns
t_{CD1}	Clock to Data Valid (Flow-Through)[2]	—	15	—	18	—	20	ns
t_{CD2}	Clock to Data Valid (Pipelined)[2]	—	6.5	—	7.5	—	9	ns
t_{DC}	Data Output Hold After Clock High	2	—	2	—	2	—	ns
t_{CKHZ}	Clock High to Output High-Z[1]	2	9	2	9	2	9	ns
t_{CKLZ}	Clock High to Output Low-Z[1]	2	—	2	—	2	—	ns
Port-to-Port Delay								
t_{CWDD}	Write Port Clock High to Read Data Delay	—	24	—	28	—	35	ns
t_{CCS}	Clock-to-Clock Setup Time	—	9	—	10	—	15	ns

5653 tbl 11

NOTES:
1. Transition is measured 0mV from Low or High-impedance voltage with the Output Test Load (Figure 2). This parameter is guaranteed by device characterization, but is not production tested.
2. The Pipelined output parameters (t_{CYC2}, t_{CD2}) to either the Left or Right ports when $\overline{FT}$/PIPE = V_{IH}. Flow-Through parameters (t_{CYC1}, t_{CD1}) apply when $\overline{FT}$/PIPE = V_{IL} for that port.
3. All input signals are synchronous with respect to the clock except for the asynchronous Output Enable ($\overline{OE}$), $\overline{FT}$/PIPE$_R$ and $\overline{FT}$/PIPE$_L$.

© 2019 Renesas Electronics Corporation

Timing Waveform of Read Cycle for Flow-Through Output ($\overline{FT}$/PIPE"X" = V_{IL})(3,6)

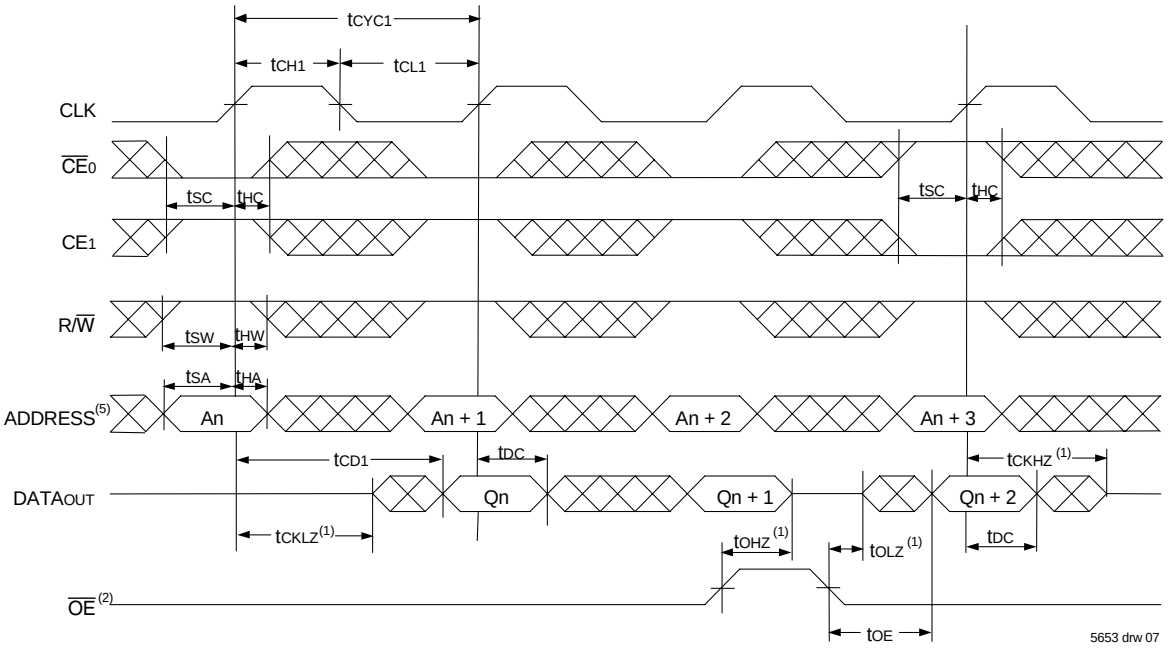

Timing Waveform of Read Cycle for Pipelined Operation ($\overline{FT}$/PIPE"X" = V_{IH})(3,6)

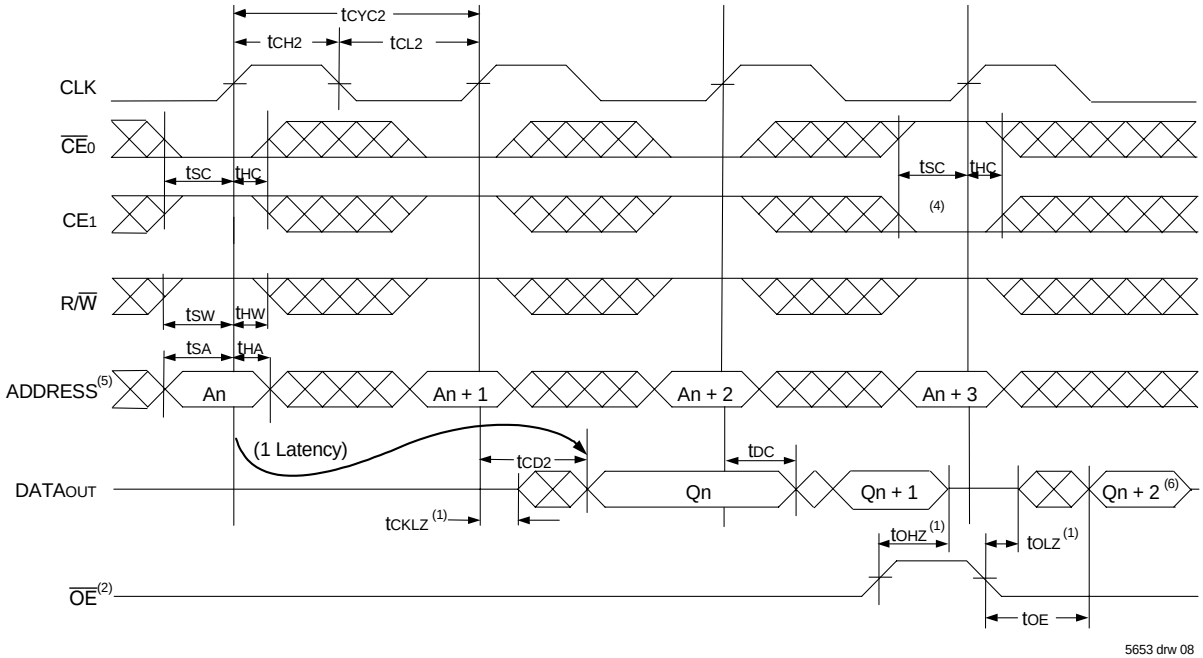

NOTES:

1. Transition is measured 0mV from Low or High-impedance voltage with the Output Test Load (Figure 2).
2. $\overline{OE}$ is asynchronously controlled; all other inputs are synchronous to the rising clock edge.
3. $\overline{ADS}$ = V_{IL}, $\overline{CNTEN}$ and $\overline{CNTRST}$ = V_{IH}.
4. The output is disabled (High-Impedance state) by $\overline{CE}_0$ = V_{IH} or CE_1 = V_{IL} following the next rising edge of the clock. Refer to Truth Table 1.
5. Addresses do not have to be accessed sequentially since $\overline{ADS}$ = V_{IL} constantly loads the address on the rising edge of the CLK; numbers are for reference use only.
6. "X" here denotes Left or Right port. The diagram is with respect to that port.

© 2019 Renesas Electronics Corporation

Timing Waveform of a Bank Select Pipelined Read(1,2)

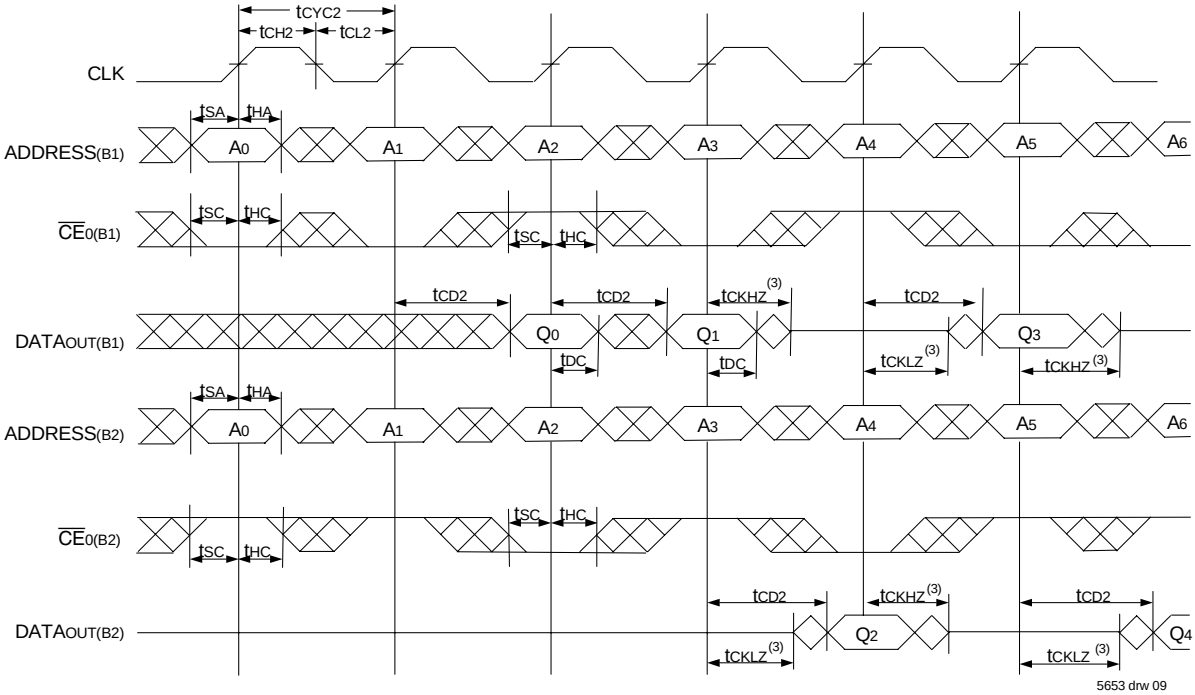

5653 drw 09

Timing Waveform of Write with Port-to-Port Flow-Through Read(4,5,7)

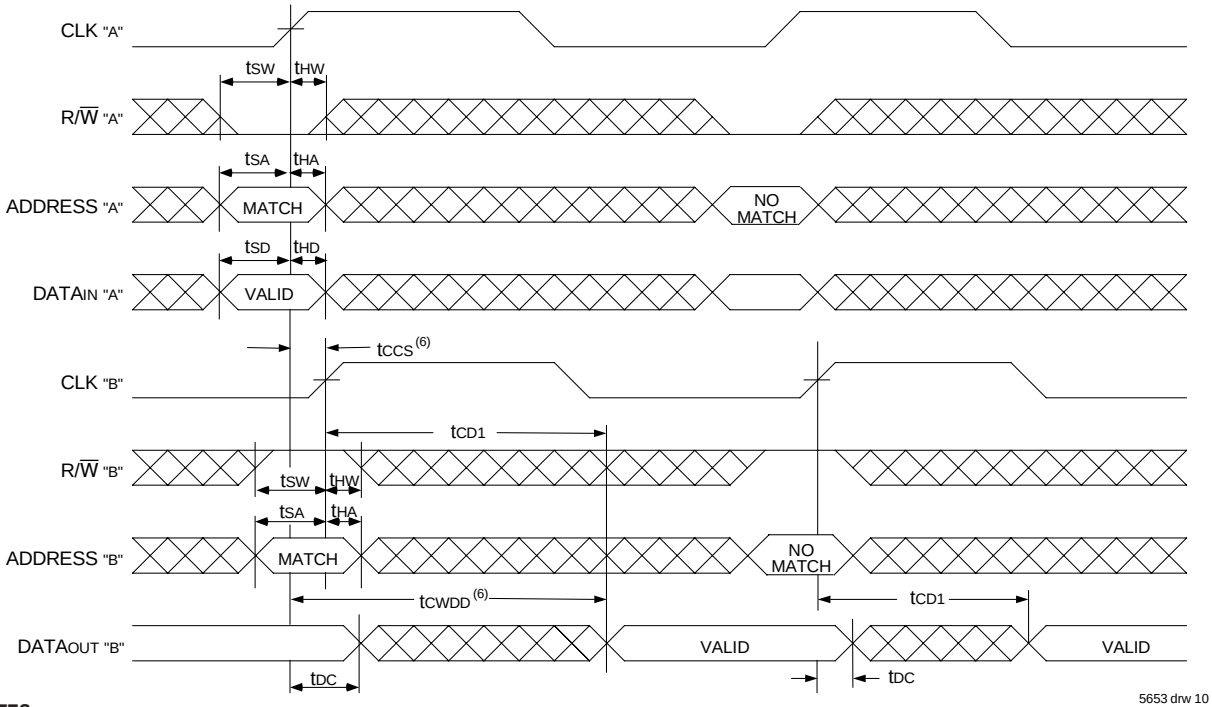

5653 drw 10

NOTES:

1. B1 Represents Bank #1; B2 Represents Bank #2. Each Bank consists of one IDT709169/59 for this waveform, and are setup for depth expansion in this example. ADDRESS(B1) = ADDRESS(B2) in this situation.
2. $\overline{OE}$ and $\overline{ADS}$ = V_{IL}; $CE_{1(B1)}$, $CE_{1(B2)}$, R/$\overline{W}$, $\overline{CNTEN}$, and $\overline{CNTRST}$ = V_{IH}.
3. Transition is measured 0mV from Low or High-impedance voltage with the Output Test Load (Figure 2).
4. $\overline{CE}_0$ and $\overline{ADS}$ = V_{IL}; CE_1, $\overline{CNTEN}$, and $\overline{CNTRST}$ = V_{IH}.
5. $\overline{OE}$ = V_{IL} for the Right Port, which is being read from. $\overline{OE}$ = V_{IH} for the Left Port, which is being written to.
6. If $t_{CCS} \leq$ maximum specified, then data from right port READ is not valid until the maximum specified for t_{CWDD}.
   If t_{CCS} > maximum specified, then data from right port READ is not valid until $t_{CCS} + t_{CD1}$. t_{CWDD} does not apply in this case.
7. All timing is the same for both Left and Right ports. Port "A" may be either Left or Right port. Port "B" is the opposite from Port "A".

© 2019 Renesas Electronics Corporation

Timing Waveform of Pipelined Read-to-Write-to-Read ($\overline{OE}$ = VIL)(3)

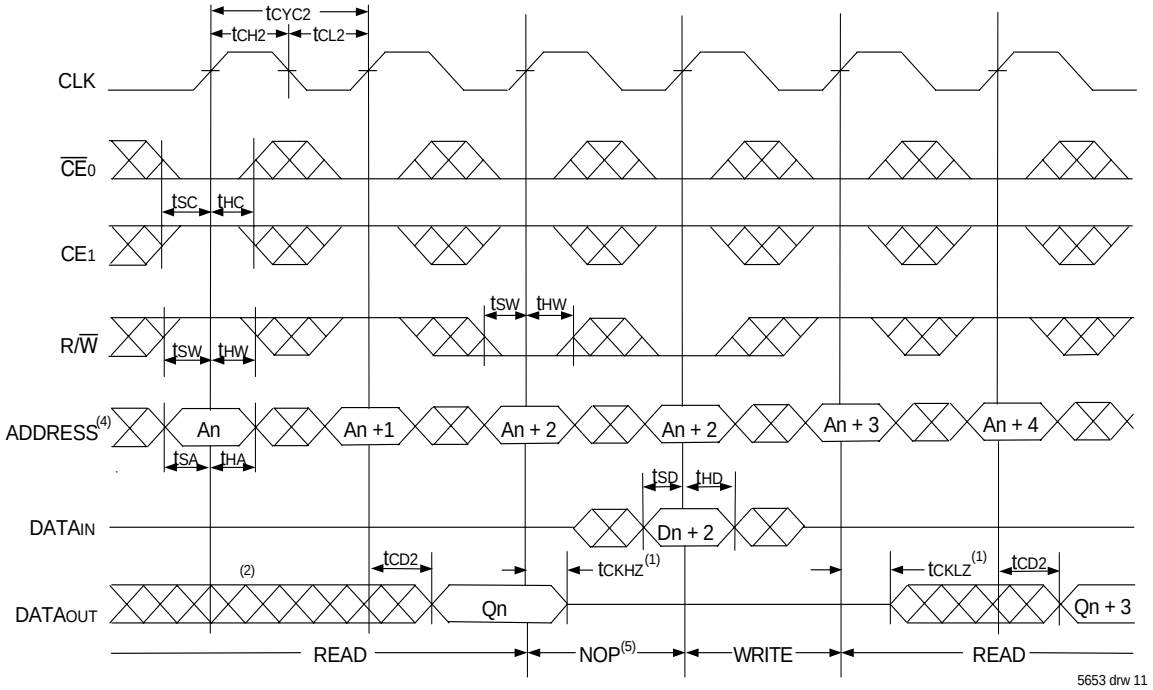

Timing Waveform of Pipelined Read-to-Write-to-Read ($\overline{OE}$ Controlled)(3)

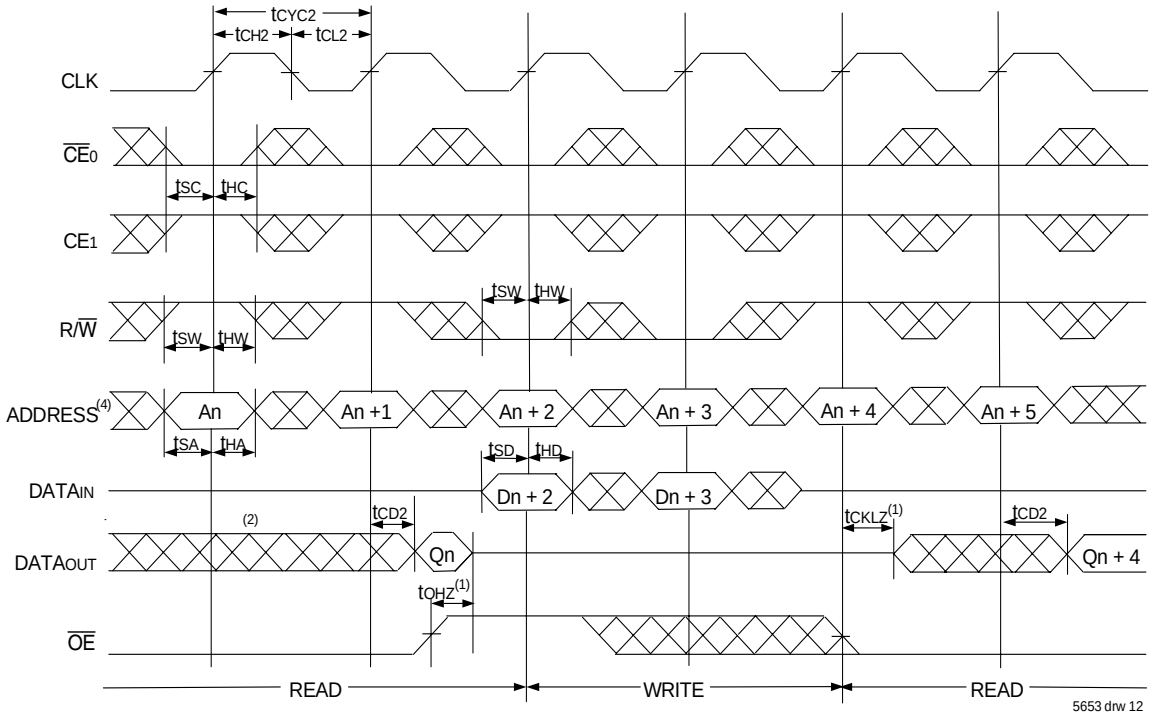

NOTES:

1. Transition is measured 0mV from Low or High-impedance voltage with the Output Test Load (Figure 2).
2. Output state (High, Low, or High-impedance) is determined by the previous cycle control signals.
3. $\overline{CE}_0$ and $\overline{ADS}$ = VIL; CE1, $\overline{CNTEN}$, and $\overline{CNTRST}$ = VIH. "NOP" is "No Operation".
4. Addresses do not have to be accessed sequentially since $\overline{ADS}$ = VIL constantly loads the address on the rising edge of the CLK; numbers are for reference use only.
5. "NOP" is "No Operation." Data in memory at the selected address may be corrupted and should be re-written to guarantee data integrity.

© 2019 Renesas Electronics Corporation

Timing Waveform of Flow-Through Read-to-Write-to-Read ($\overline{OE}$ = VIL)(3)

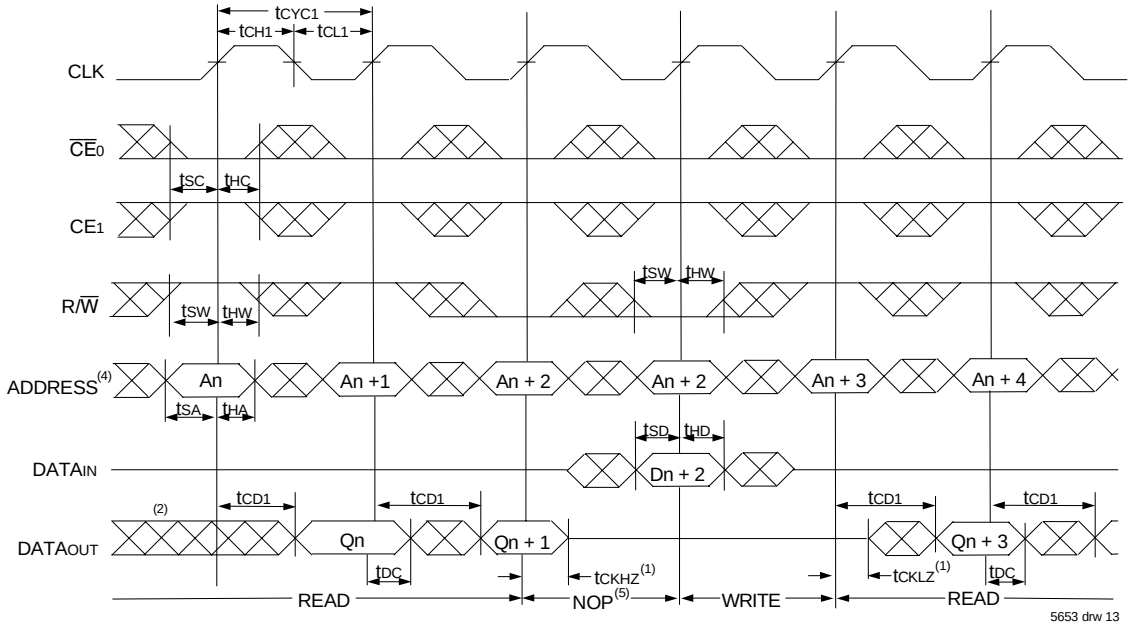

Timing Waveform of Flow-Through Read-to-Write-to-Read ($\overline{OE}$ Controlled)(3)

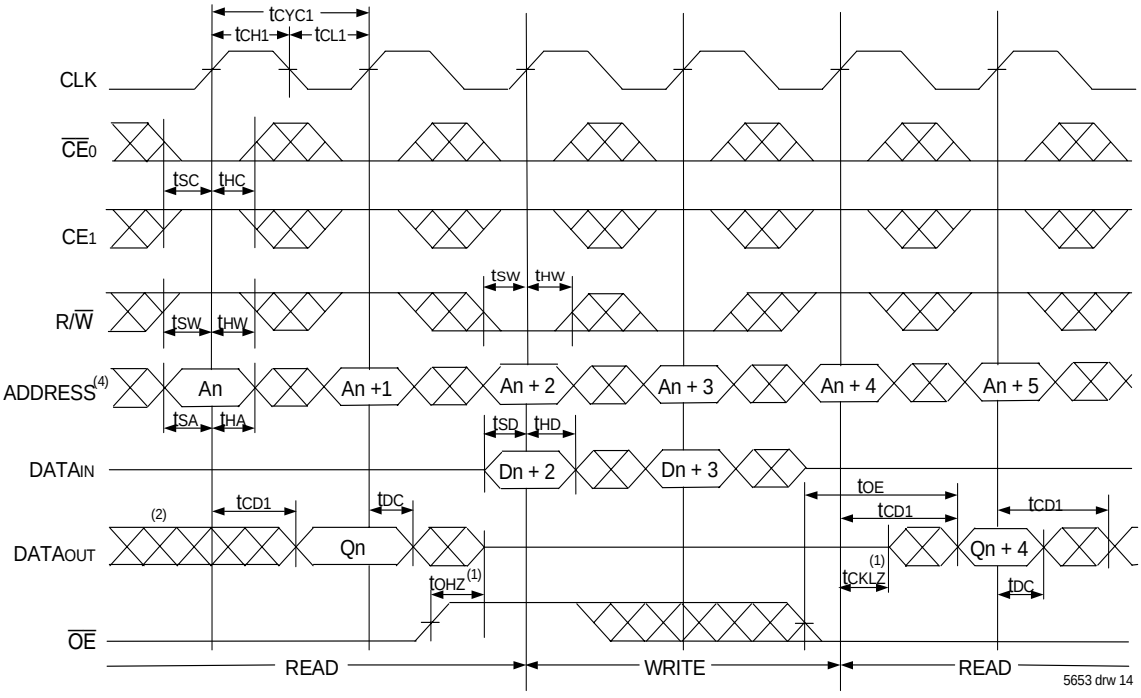

NOTES:

1. Transition is measured 0mV from Low or High-impedance voltage with the Output Test Load (Figure 2).
2. Output state (High, Low, or High-impedance is determined by the previous cycle control signals.
3. $\overline{CE_0}$ and $\overline{ADS}$ = VIL; CE1, $\overline{CNTEN}$, and $\overline{CNTRST}$ = VIH. "NOP" is "No Operation".
4. Addresses do not have to be accessed sequentially since $\overline{ADS}$ = VIL constantly loads the address on the rising edge of the CLK; numbers are for reference use only.
5. "NOP" is "No Operation." Data in memory at the selected address may be corrupted and should be re-written to guarantee data integrity.

© 2019 Renesas Electronics Corporation

Timing Waveform of Pipelined Read with Address Counter Advance(1)

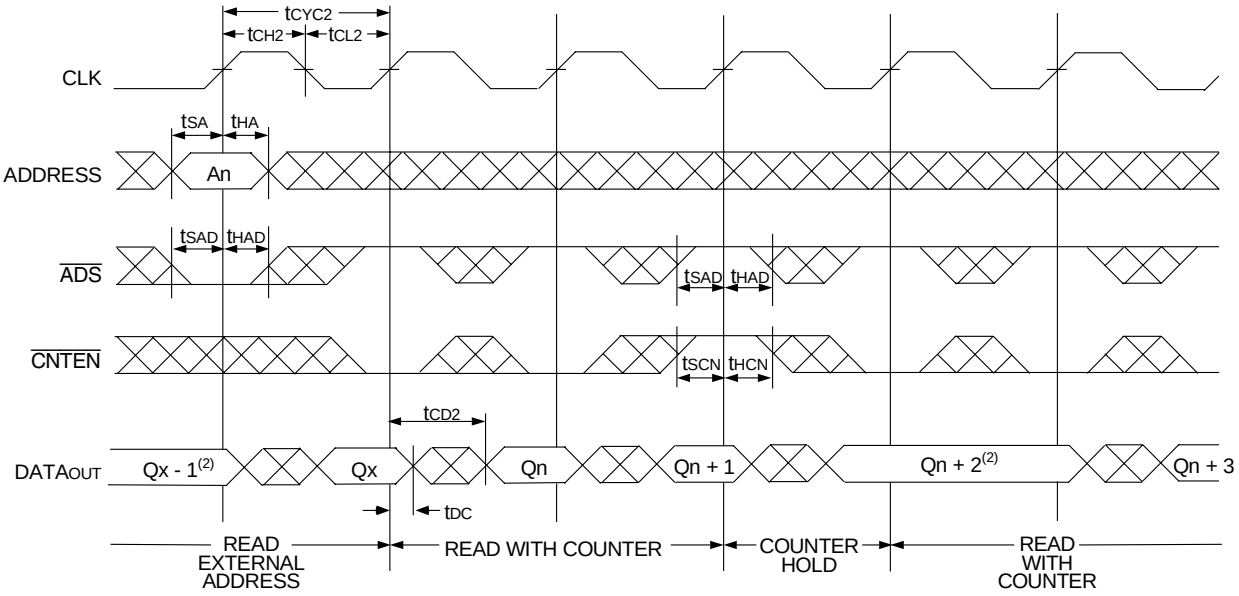

Timing Waveform of Flow-Through Read with Address Counter Advance(1)

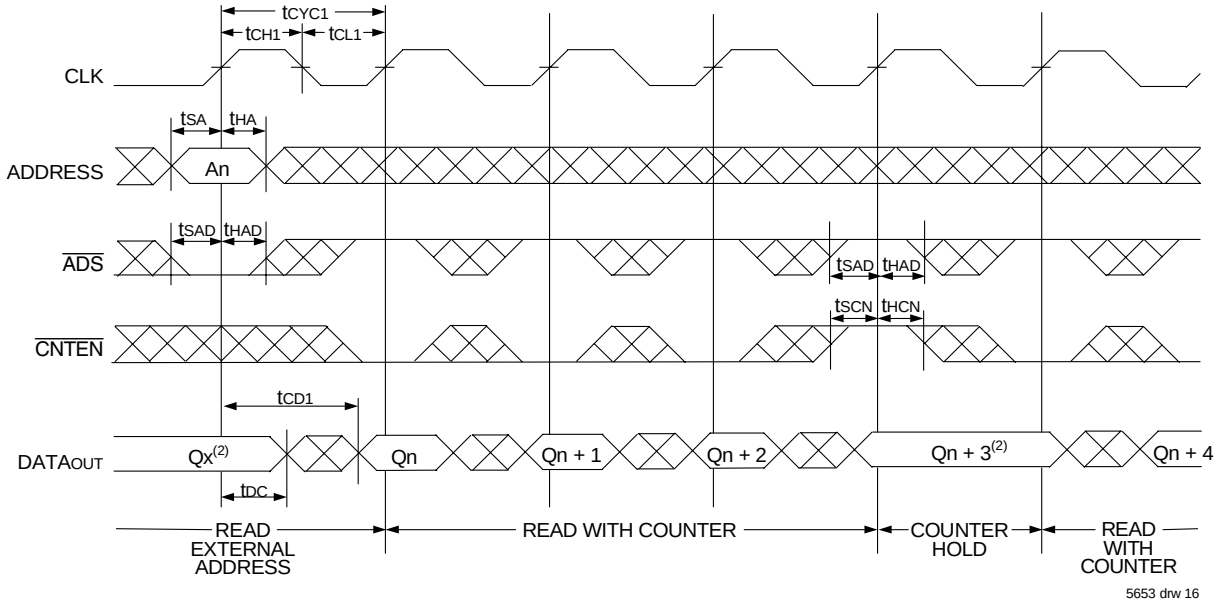

NOTES:
1. $\overline{CE_0}$ and $\overline{OE}$ = V_{IL}, CE_1, R/$\overline{W}$, and $\overline{CNTRST}$ = V_{IH}.
2. If there is no address change via $\overline{ADS}$ = V_{IL} (loading a new address) or $\overline{CNTEN}$ = V_{IL} (advancing the address), i.e. $\overline{ADS}$ = V_{IH} and $\overline{CNTEN}$ = V_{IH}, then the data output remains constant for subsequent clocks.

© 2019 Renesas Electronics Corporation

Timing Waveform of Write with Address Counter Advance (Flow-Through or Pipelined Outputs)(1)

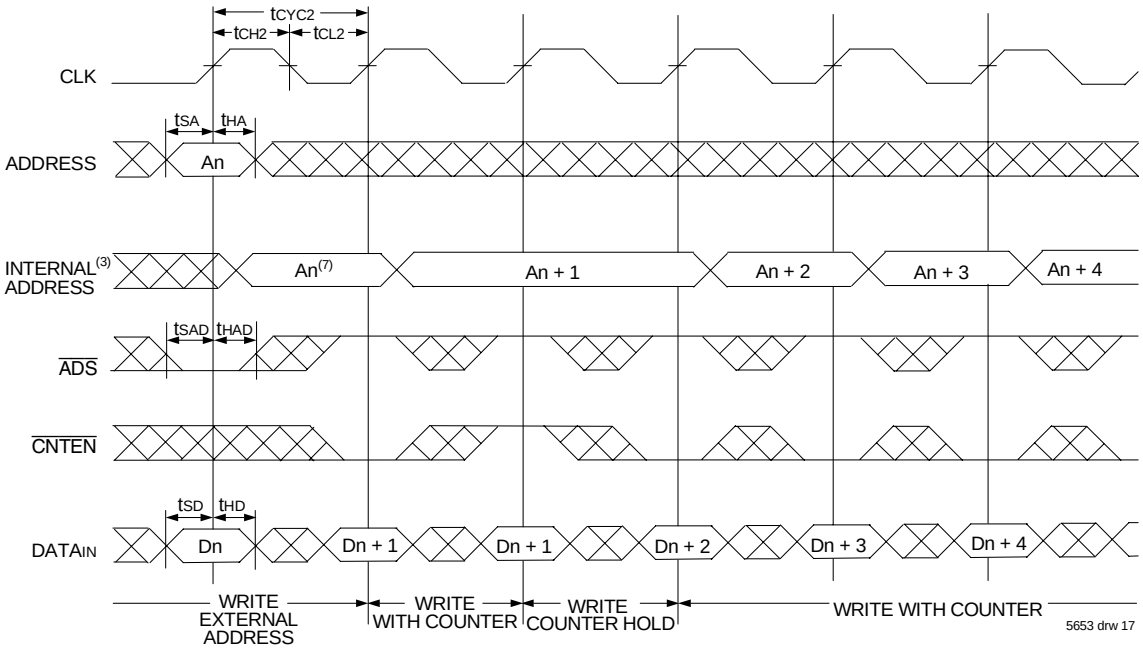

Timing Waveform of Counter Reset (Pipelined Outputs)(2)

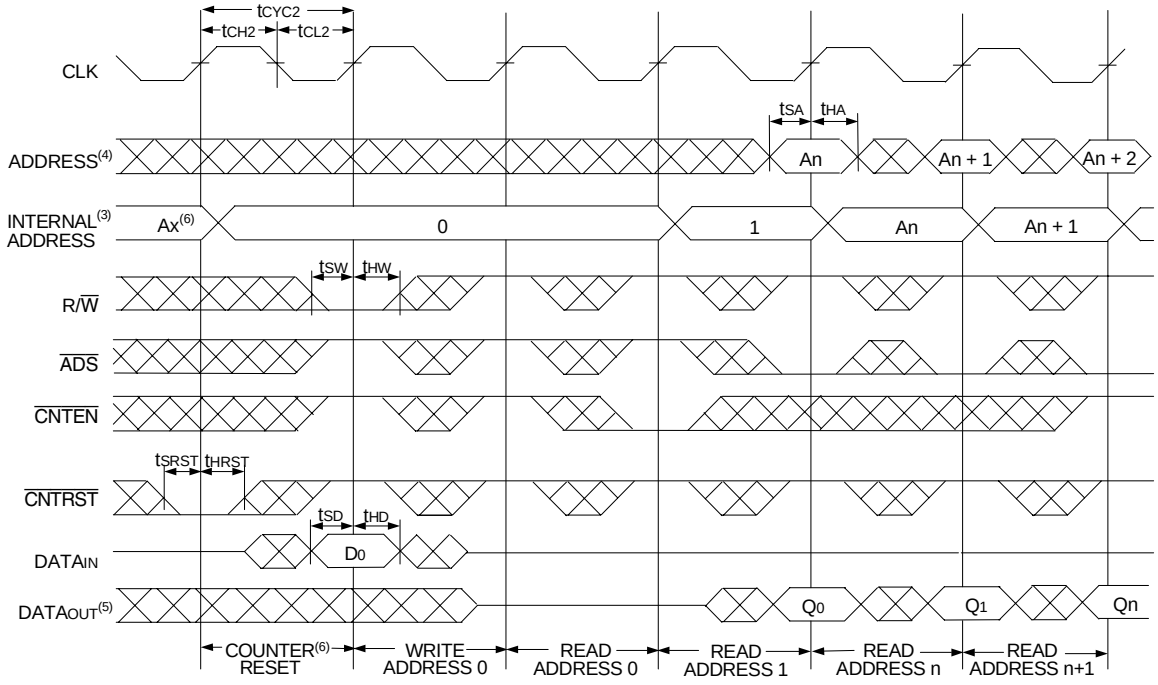

NOTES:
1. $\overline{CE_0}$ and R/$\overline{W}$ = V_{IL}; CE_1 and $\overline{CNTRST}$ = V_{IH}.
2. $\overline{CE_0}$ = V_{IL}; CE_1 = V_{IH}.
3. The "Internal Address" is equal to the "External Address" when $\overline{ADS}$ = V_{IL} and equals the counter output when $\overline{ADS}$ = V_{IH}.
4. Addresses do not have to be accessed sequentially since $\overline{ADS}$ = V_{IL} constantly loads the address on the rising edge of the CLK; numbers are for reference use only.
5. Output state (High, Low, or High-impedance) is determined by the previous cycle control signals.
6. No dead cycle exists during counter reset. A READ or WRITE cycle may be coincidental with the counter reset cycle.
7. $\overline{CNTEN}$ = V_{IL} advances Internal Address from 'An' to 'An +1'. The transition shown indicates the time required for the counter to advance. The 'An +1' Address is written to during this cycle.

© 2019 Renesas Electronics Corporation

A Functional Description

The IDT709169/59 provides a true synchronous Dual-Port Static RAM interface. Registered inputs provide minimal set-up and hold times on address, data, and all critical control inputs. All internal registers are clocked on the rising edge of the clock signal, however, the self-timed internal write pulse is independent of the LOW to HIGH transition of the clock signal.

An asynchronous output enable is provided to ease asynchronous bus interfacing. Counter enable inputs are also provided to stall the operation of the address counters for fast interleaved memory applications.

$\overline{CE}_0$ = V_{IH} or CE_1 = V_{IL} for one clock cycle will power down the internal circuitry to reduce static power consumption. Multiple chip enables allow easier banking of multiple IDT709169/59's for depth expansion configurations. When the Pipelined output mode is enabled, two cycles are required to get valid data on the outputs.

Depth and Width Expansion

The IDT709169/59 features dual chip enables (refer to Truth Table I) in order to facilitate rapid and simple depth expansion with no requirements for external logic. Figure 4 illustrates how to control the various chip enables in order to expand two devices in depth.

The IDT709169/59 can also be used in applications requiring expanded width, as indicated in Figure 4. Since the banks are allocated at the discretion of the user, the external controller can be set up to drive the input signals for the various devices as required to allow for 18-bit or wider applications.

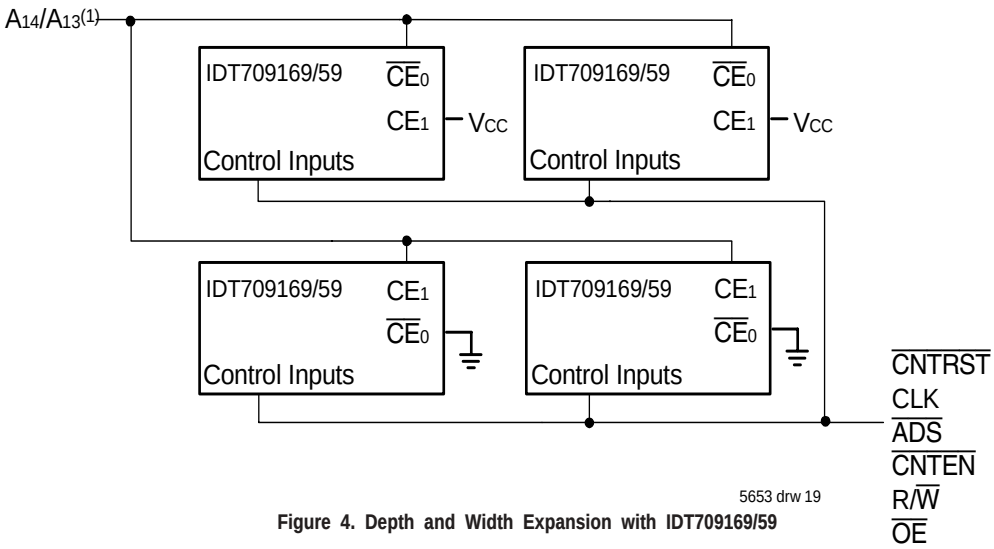

Figure 4. Depth and Width Expansion with IDT709169/59

NOTE:
1. A_{14} is for IDT709169, A_{13} is for IDT709159.

© 2019 Renesas Electronics Corporation

Ordering Information

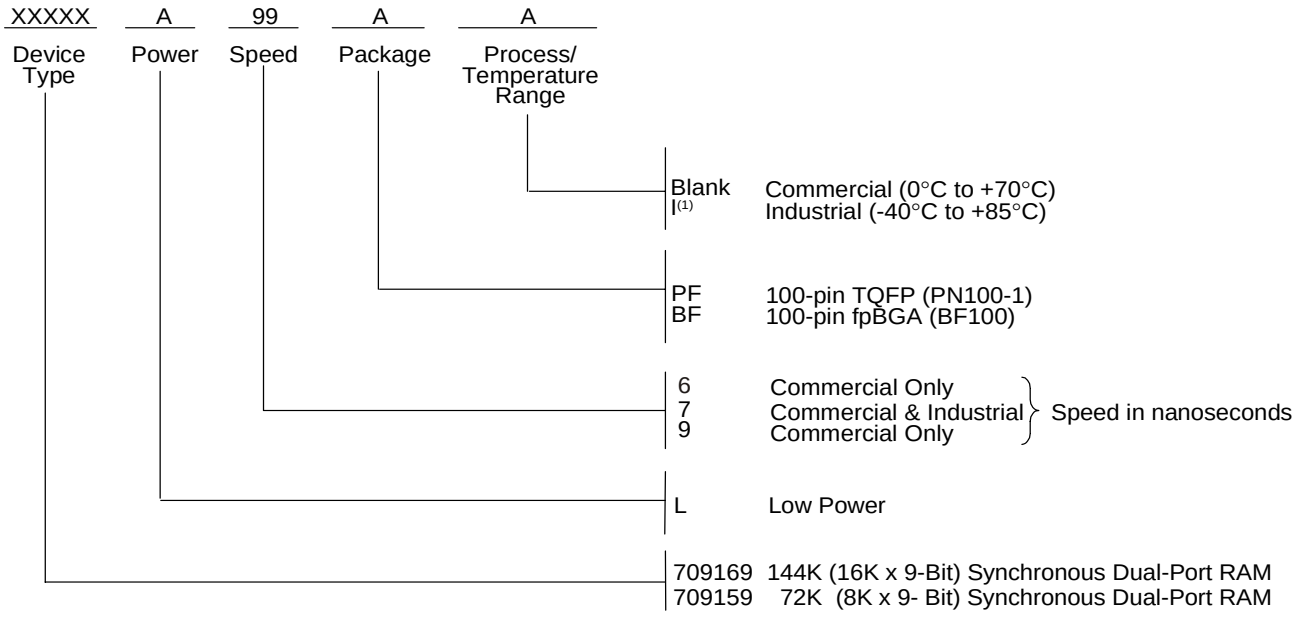

5653 drw 20

NOTE:

1. Contact your local sales office for Industrial temp range for other speeds, packages and powers.
   LEAD FINISH (SnPb) parts are in EOL process. Product Discontinuation Notice - PDN# SP-17-02

IDT Clock Solution for IDT709169/59 Dual-Port

IDT Dual-Port Part Number	Dual-Port I/O Specitications		Clock Specifications				IDT PLL Clock Device	IDT Non-PLL Clock Device
	Voltage	I/O	Input Capacitance	Input Duty Cycle Requirement	Maximum Frequency	Jitter Tolerance		
709169/59	5	TTL	9pF	40%	100	150ps	FCT88915TT	49FCT805T 49FCT806T 74FCT807T

5653 tbl 12

Datasheet Document History

07/08/02:	Initial Public Release
08/18/03:	Removed Preliminary status
	Page 16 Added IDT Clock Solution Table
01/29/09:	Page 16 Removed "IDT" from orderable part number
02/05/14:	709169 Changed to Obsolete Status
	Product Discontinuation Notice - PDN# F-09-01
04/26/19:	Datasheet changed to Obsolete Status
	Product Discontinuation Notice - PDN# SP-17-02
	Last time buy expires June 15, 2018

IMPORTANT NOTICE AND DISCLAIMER

RENESAS ELECTRONICS CORPORATION AND ITS SUBSIDIARIES (“RENESAS”) PROVIDES TECHNICAL SPECIFICATIONS AND RELIABILITY DATA (INCLUDING DATASHEETS), DESIGN RESOURCES (INCLUDING REFERENCE DESIGNS), APPLICATION OR OTHER DESIGN ADVICE, WEB TOOLS, SAFETY INFORMATION, AND OTHER RESOURCES “AS IS” AND WITH ALL FAULTS, AND DISCLAIMS ALL WARRANTIES, EXPRESS OR IMPLIED, INCLUDING, WITHOUT LIMITATION, ANY IMPLIED WARRANTIES OF MERCHANTABILITY, FITNESS FOR A PARTICULAR PURPOSE, OR NON-INFRINGEMENT OF THIRD PARTY INTELLECTUAL PROPERTY RIGHTS.

These resources are intended for developers skilled in the art designing with Renesas products. You are solely responsible for (1) selecting the appropriate products for your application, (2) designing, validating, and testing your application, and (3) ensuring your application meets applicable standards, and any other safety, security, or other requirements. These resources are subject to change without notice. Renesas grants you permission to use these resources only for development of an application that uses Renesas products. Other reproduction or use of these resources is strictly prohibited. No license is granted to any other Renesas intellectual property or to any third party intellectual property. Renesas disclaims responsibility for, and you will fully indemnify Renesas and its representatives against, any claims, damages, costs, losses, or liabilities arising out of your use of these resources. Renesas' products are provided only subject to Renesas' Terms and Conditions of Sale or other applicable terms agreed to in writing. No use of any Renesas resources expands or otherwise alters any applicable warranties or warranty disclaimers for these products.

(Rev.1.0 Mar 2020)

Corporate Headquarters

TOYOSU FORESIA, 3-2-24 Toyosu,
Koto-ku, Tokyo 135-0061, Japan
www.renesas.com

Contact Information

For further information on a product, technology, the most up-to-date version of a document, or your nearest sales office, please visit:
www.renesas.com/contact/

Trademarks

Renesas and the Renesas logo are trademarks of Renesas Electronics Corporation. All trademarks and registered trademarks are the property of their respective owners.

© 2020 Renesas Electronics Corporation. All rights reserved.