HIGH-SPEED 2.5V 1024K x 36 SYNCHRONOUS DUAL-PORT STATIC RAM WITH 3.3V OR 2.5V INTERFACE

70T3509M

Features:

- **True Dual-Port memory cells which allow simultaneous access of the same memory location**
- **High-speed data access**
  - *Commercial: 4.2ns (133MHz)(max.)*
  - *Industrial: 4.2ns (133MHz)(max.)*
- **Selectable Pipelined or Flow-Through output mode**
- **Counter enable and repeat features**
- **Interrupt Flags**
- **Full synchronous operation on both ports**
  - *7.5ns cycle time, 133MHz operation (9.5Gbps bandwidth)*
  - *1.5ns setup to clock and 0.5ns hold on all control, data, and address inputs @ 133MHz*
  - *Fast 4.2ns clock to data out*
  - *Data input, address, byte enable and control registers*
  - *Self-timed write allows fast cycle time*
- **Separate byte controls for multiplexed bus and bus matching compatibility**
- **Dual Cycle Deselect (DCD) for Pipelined Output Mode**
- **2.5V (±100mV) power supply for core**
- **LVTTL compatible, selectable 3.3V (±150mV) or 2.5V (±100mV) power supply for I/Os and control signals on each port**
- **Includes JTAG functionality**
- **Available in a 256-pin Ball Grid Array (BGA)**
- **Common BGA footprint provides design flexibility over seven density generations (512K to 36M-bit)**
- **Green parts available, see ordering information**

Functional Block Diagram

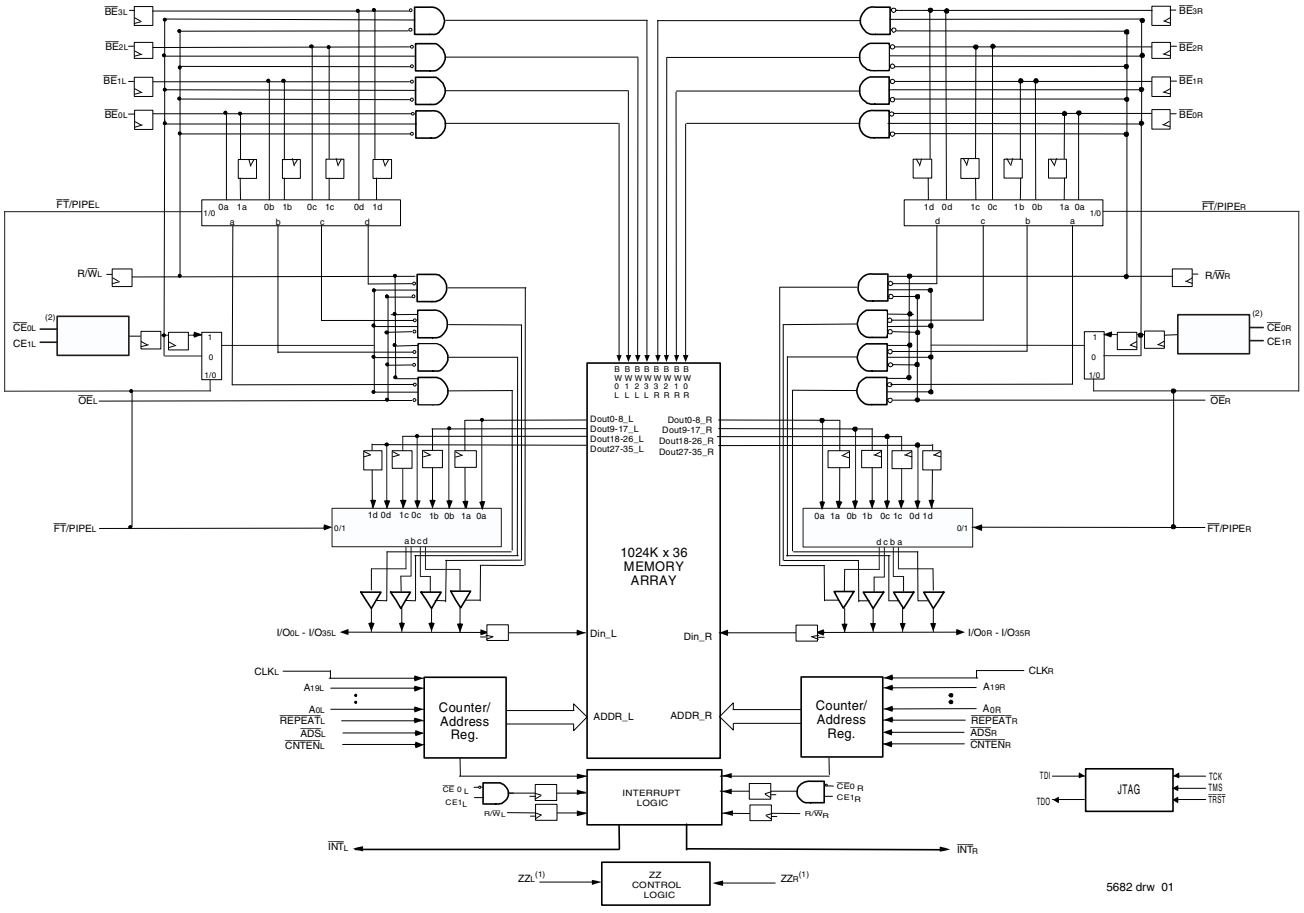

NOTES:

1. The sleep mode pin shuts off all dynamic inputs, except JTAG inputs, when asserted. All static inputs, i.e., PL/$\overline{FT}$x and OPTx and the sleep mode pins themselves (ZZx) are not affected during sleep mode.
2. See Truth Table I for Functionality.

Description:

The IDT70T3509M is a high-speed 1024K x 36 bit synchronous Dual-Port RAM. The memory array utilizes Dual-Port memory cells to allow simultaneous access of any address from both ports. Registers on control, data, and address inputs provide minimal setup and hold times. The timing latitude provided by this approach allows systems to be designed with very short cycle times. With an input data register, the IDT70T3509M has been optimized for applications having unidirectional or bidirectional data flow in bursts. An automatic power down feature, controlled by $\overline{CE}_0$ and CE_1, permits the on-chip circuitry of each port to enter a very low standby power mode.

The 70T3509M can support an operating voltage of either 3.3V or 2.5V on one or both ports, controllable by the OPT pins. The power supply for the core of the device (V_{DD}) is at 2.5V.

Pin Configuration (1,2,3,4)

70T3509M
BP256(5,7)
BPG256(5,7)

256-Pin BGA
Top View(6)

A1 NC	A2 TDI	A3 A_{19L}	A4 A_{17L}	A5 A_{14L}	A6 A_{11L}	A7 A_{8L}	A8 $\overline{BE}_{2L}$	A9 CE_{1L}	A10 $\overline{OE}_L$	A11 $\overline{CNTEN}_L$	A12 A_{5L}	A13 A_{2L}	A14 A_{0L}	A15 NC	A16 NC
B1 I/O_{18L}	B2 NC	B3 TDO	B4 A_{18L}	B5 A_{15L}	B6 A_{12L}	B7 A_{9L}	B8 $\overline{BE}_{3L}$	B9 $\overline{CE}_{0L}$	B10 $R/\overline{W}_L$	B11 $\overline{REPEAT}_L$	B12 A_{4L}	B13 A_{1L}	B14 V_{DD}	B15 I/O_{17L}	B16 NC
C1 I/O_{18R}	C2 I/O_{19L}	C3 V_{SS}	C4 A_{16L}	C5 A_{13L}	C6 A_{10L}	C7 A_{7L}	C8 $\overline{BE}_{1L}$	C9 $\overline{BE}_{0L}$	C10 CLK_L	C11 $\overline{ADS}_L$	C12 A_{6L}	C13 A_{3L}	C14 OPT_L	C15 I/O_{17R}	C16 I/O_{16L}
D1 I/O_{20R}	D2 I/O_{19R}	D3 I/O_{20L}	D4 $PIPE/\overline{FT}_L$	D5 V_{DDQL}	D6 V_{DDQL}	D7 V_{DDQR}	D8 V_{DDQR}	D9 V_{DDQL}	D10 V_{DDQL}	D11 V_{DDQR}	D12 V_{DDQR}	D13 V_{DD}	D14 I/O_{15R}	D15 I/O_{15L}	D16 I/O_{16R}
E1 I/O_{21R}	E2 I/O_{21L}	E3 I/O_{22L}	E4 V_{DDQL}	E5 V_{DD}	E6 V_{DD}	E7 $\overline{INT}_L$	E8 V_{SS}	E9 V_{SS}	E10 V_{SS}	E11 V_{DD}	E12 V_{DD}	E13 V_{DDQR}	E14 I/O_{13L}	E15 I/O_{14L}	E16 I/O_{14R}
F1 I/O_{23L}	F2 I/O_{22R}	F3 I/O_{23R}	F4 V_{DDQL}	F5 V_{DD}	F6 NC	F7 NC	F8 V_{SS}	F9 V_{SS}	F10 V_{SS}	F11 V_{SS}	F12 V_{DD}	F13 V_{DDQR}	F14 I/O_{12R}	F15 I/O_{13R}	F16 I/O_{12L}
G1 I/O_{24R}	G2 I/O_{24L}	G3 I/O_{25L}	G4 V_{DDQR}	G5 V_{SS}	G6 V_{SS}	G7 V_{SS}	G8 V_{SS}	G9 V_{SS}	G10 V_{SS}	G11 V_{SS}	G12 V_{SS}	G13 V_{DDQL}	G14 I/O_{10L}	G15 I/O_{11L}	G16 I/O_{11R}
H1 I/O_{26L}	H2 I/O_{25R}	H3 I/O_{26R}	H4 V_{DDQR}	H5 V_{SS}	H6 V_{SS}	H7 V_{SS}	H8 V_{SS}	H9 V_{SS}	H10 V_{SS}	H11 V_{SS}	H12 V_{SS}	H13 V_{DDQL}	H14 I/O_{9R}	H15 IO_{9L}	H16 I/O_{10R}
J1 I/O_{27L}	J2 I/O_{28R}	J3 I/O_{27R}	J4 V_{DDQL}	J5 ZZ_R	J6 V_{SS}	J7 V_{SS}	J8 V_{SS}	J9 V_{SS}	J10 V_{SS}	J11 V_{SS}	J12 ZZ_L	J13 V_{DDQR}	J14 I/O_{8R}	J15 I/O_{7R}	J16 I/O_{8L}
K1 I/O_{29R}	K2 I/O_{29L}	K3 I/O_{28L}	K4 V_{DDQL}	K5 V_{SS}	K6 V_{SS}	K7 V_{SS}	K8 V_{SS}	K9 V_{SS}	K10 V_{SS}	K11 V_{SS}	K12 V_{SS}	K13 V_{DDQR}	K14 I/O_{6R}	K15 I/O_{6L}	K16 I/O_{7L}
L1 I/O_{30L}	L2 I/O_{31R}	L3 I/O_{30R}	L4 V_{DDQR}	L5 V_{DD}	L6 NC	L7 NC	L8 V_{SS}	L9 V_{SS}	L10 V_{SS}	L11 V_{SS}	L12 V_{DD}	L13 V_{DDQL}	L14 I/O_{5L}	L15 I/O_{4R}	L16 I/O_{5R}
M1 I/O_{32R}	M2 I/O_{32L}	M3 I/O_{31L}	M4 V_{DDQR}	M5 V_{DD}	M6 V_{DD}	M7 $\overline{INT}_R$	M8 V_{SS}	M9 V_{SS}	M10 V_{SS}	M11 V_{DD}	M12 V_{DD}	M13 V_{DDQL}	M14 I/O_{3R}	M15 I/O_{3L}	M16 I/O_{4L}
N1 I/O_{33L}	N2 I/O_{34R}	N3 I/O_{33R}	N4 $PIPE/\overline{FT}_R$	N5 V_{DDQR}	N6 V_{DDQR}	N7 V_{DDQL}	N8 V_{DDQL}	N9 V_{DDQR}	N10 V_{DDQR}	N11 V_{DDQL}	N12 V_{DDQL}	N13 V_{DD}	N14 I/O_{2L}	N15 I/O_{1R}	N16 I/O_{2R}
P1 I/O_{35R}	P2 I/O_{34L}	P3 TMS	P4 A_{16R}	P5 A_{13R}	P6 A_{10R}	P7 A_{7R}	P8 $\overline{BE}_{1R}$	P9 $\overline{BE}_{0R}$	P10 CLK_R	P11 $\overline{ADS}_R$	P12 A_{6R}	P13 A_{3R}	P14 I/O_{0L}	P15 I/O_{0R}	P16 I/O_{1L}
R1 I/O_{35L}	R2 NC	R3 $\overline{TRST}$	R4 A_{18R}	R5 A_{15R}	R6 A_{12R}	R7 A_{9R}	R8 $\overline{BE}_{3R}$	R9 $\overline{CE}_{0R}$	R10 $R/\overline{W}_R$	R11 $\overline{REPEAT}_R$	R12 A_{4R}	R13 A_{1R}	R14 OPT_R	R15 NC	R16 NC
T1 NC	T2 TCK	T3 A_{19R}	T4 A_{17R}	T5 A_{14R}	T6 A_{11R}	T7 A_{8R}	T8 $\overline{BE}_{2R}$	T9 CE_{1R}	T10 $\overline{OE}_R$	T11 $\overline{CNTEN}_R$	T12 A_{5R}	T13 A_{2R}	T14 A_{0R}	T15 NC	T16 NC

5682 drw 02e

NOTES:

1. All V_{DD} pins must be connected to 2.5V power supply.
2. All V_{DDQ} pins must be connected to appropriate power supply: 3.3V if OPT pin for that port is set to V_{DD} (2.5V), and 2.5V if OPT pin for that port is set to V_{SS} (0V).
3. All V_{SS} pins must be connected to ground supply.
4. Package body is approximately 17mm x 17mm x 1.76mm, with 1.0mm ball-pitch.
5. This package code is used to reference the package diagram.
6. This text does not indicate orientation of the actual part-marking.
7. BP-256 package thickness is 1.76mm nominal. This is thicker than the BC-256 package (1.40mm nominal) used for the lower density IDT dual-port products.

Pin Names

Left Port	Right Port	Names
$\overline{CE}_{0L}$, CE_{1L}	$\overline{CE}_{0R}$, CE_{1R}	Chip Enables (Input)[5]
R/$\overline{W}_L$	R/$\overline{W}_R$	Read/Write Enable (Input)
$\overline{OE}_L$	$\overline{OE}_R$	Output Enable (Input)
A_{0L} - A_{19L}	A_{0R} - A_{19R}	Address (Input)
I/O_{0L} - I/O_{35L}	I/O_{0R} - I/O_{35R}	Data Input/Output
CLK_L	CLK_R	Clock (Input)
PL/$\overline{FT}_L$	PL/$\overline{FT}_R$	Pipeline/Flow-Through (Input)
$\overline{ADS}_L$	$\overline{ADS}_R$	Address Strobe Enable (Input)
$\overline{CNTEN}_L$	$\overline{CNTEN}_R$	Counter Enable (Input)
$\overline{REPEAT}_L$	$\overline{REPEAT}_R$	Counter Repeat[3] (Input)
$\overline{BE}_{0L}$ - $\overline{BE}_{3L}$	$\overline{BE}_{0R}$ - $\overline{BE}_{3R}$	Byte Enables (9-bit bytes) (Input)[5]
V_{DDQL}	V_{DDQR}	Power (I/O Bus) (3.3V or 2.5V)[1] (Input)
OPT_L	OPT_R	Option for selecting V_{DDQX}[1,2] (Input)
ZZ_L	ZZ_R	Sleep Mode pin[4] (Input)
V_{DD}		Power (2.5V)[1] (Input)
V_{SS}		Ground (0V) (Input)
TDI		Test Data Input
TDO		Test Data Output
TCK		Test Logic Clock (10MHz) (Input)
TMS		Test Mode Select (Input)
$\overline{TRST}$		Reset (Initialize TAP Controller) (Input)
$\overline{INT}_L$	$\overline{INT}_R$	Interrupt Flag (Output)

5682 tbl 01

NOTES:

1. V_{DD}, OPT_X, and V_{DDQX} must be set to appropriate operating levels prior to applying inputs on the I/Os and controls for that port.
2. OPT_X selects the operating voltage levels for the I/Os and controls on that port. If OPT_X is set to V_{DD} (2.5V), then that port's I/Os and controls will operate at 3.3V levels and V_{DDQX} must be supplied at 3.3V. If OPT_X is set to V_{SS} (0V), then that port's I/Os and address controls will operate at 2.5V levels and V_{DDQX} must be supplied at 2.5V. The OPT pins are independent of one another—both ports can operate at 3.3V levels, both can operate at 2.5V levels, or either can operate at 3.3V with the other at 2.5V.
3. When $\overline{REPEAT}_X$ is asserted, the counter will reset to the last valid address loaded via $\overline{ADS}_X$.
4. The sleep mode pin shuts off all dynamic inputs, except JTAG inputs, when asserted. All static inputs, i.e., PL/$\overline{FT}$x and OPTx and the sleep mode pins themselves (ZZx) are not affected during sleep mode. It is recommended that boundary scan not be operated during sleep mode.
5. Chip Enables and Byte Enables are double buffered when PL/$\overline{FT}$ = V_{IH}, i.e., the signals take two cycles to deselect.

Truth Table I—Read/Write and Enable Control (1,2,3,4)

$\overline{OE}$	CLK	$\overline{CE}_0$	CE_1	$\overline{BE}_3$	$\overline{BE}_2$	$\overline{BE}_1$	$\overline{BE}_0$	R/$\overline{W}$	ZZ	Byte 3 I/O_{27-35}	Byte 2 I/O_{18-26}	Byte 1 I/O_{9-17}	Byte 0 I/O_{0-8}	MODE
X	↑	H	L	X	X	X	X	X	L	High-Z	High-Z	High-Z	High-Z	Deselected–Power Down
X	↑	L	L	X	X	X	X	X	X	Active	Active	Active	Active	Not Allowed
X	↑	H	H	X	X	X	X	X	X	Active	Active	Active	Active	Not Allowed
X	↑	L	H	H	H	H	H	X	L	High-Z	High-Z	High-Z	High-Z	All Bytes Deselected
X	↑	L	H	H	H	H	L	L	L	High-Z	High-Z	High-Z	D_{IN}	Write to Byte 0 Only
X	↑	L	H	H	H	L	H	L	L	High-Z	High-Z	D_{IN}	High-Z	Write to Byte 1 Only
X	↑	L	H	H	L	H	H	L	L	High-Z	D_{IN}	High-Z	High-Z	Write to Byte 2 Only
X	↑	L	H	L	H	H	H	L	L	D_{IN}	High-Z	High-Z	High-Z	Write to Byte 3 Only
X	↑	L	H	H	H	L	L	L	L	High-Z	High-Z	D_{IN}	D_{IN}	Write to Lower 2 Bytes Only
X	↑	L	H	L	L	H	H	L	L	D_{IN}	D_{IN}	High-Z	High-Z	Write to Upper 2 bytes Only
X	↑	L	H	L	L	L	L	L	L	D_{IN}	D_{IN}	D_{IN}	D_{IN}	Write to All Bytes
L	↑	L	H	H	H	H	L	H	L	High-Z	High-Z	High-Z	D_{OUT}	Read Byte 0 Only
L	↑	L	H	H	H	L	H	H	L	High-Z	High-Z	D_{OUT}	High-Z	Read Byte 1 Only
L	↑	L	H	H	L	H	H	H	L	High-Z	D_{OUT}	High-Z	High-Z	Read Byte 2 Only
L	↑	L	H	L	H	H	H	H	L	D_{OUT}	High-Z	High-Z	High-Z	Read Byte 3 Only
L	↑	L	H	H	H	L	L	H	L	High-Z	High-Z	D_{OUT}	D_{OUT}	Read Lower 2 Bytes Only
L	↑	L	H	L	L	H	H	H	L	D_{OUT}	D_{OUT}	High-Z	High-Z	Read Upper 2 Bytes Only
L	↑	L	H	L	L	L	L	H	L	D_{OUT}	D_{OUT}	D_{OUT}	D_{OUT}	Read All Bytes
H	↑	X	X	X	X	X	X	X	L	High-Z	High-Z	High-Z	High-Z	Outputs Disabled
X	X	X	X	X	X	X	X	X	H	High-Z	High-Z	High-Z	High-Z	Sleep Mode

5682 tbl 02

NOTES:
1. "H" = V_{IH}, "L" = V_{IL}, "X" = Don't Care.
2. $\overline{ADS}$, $\overline{CNTEN}$, $\overline{REPEAT}$ = X.
3. $\overline{OE}$ and ZZ are asynchronous input signals.
4. It is possible to read or write any combination of bytes during a given access. A few representative samples have been illustrated here.

Truth Table II—Address Counter Control (1,2)

Address	Previous Internal Address	Internal Address Used	CLK	$\overline{ADS}$	$\overline{CNTEN}$	$\overline{REPEAT}$[6]	I/O[3]	MODE
An	X	An	↑	L[4]	X	H	$D_{I/O}$ (n)	External Address Used
X	An	An + 1	↑	H	L[5]	H	$D_{I/O}$(n+1)	Counter Enabled—Internal Address generation[7]
X	An + 1	An + 1	↑	H	H	H	$D_{I/O}$(n+1)	External Address Blocked—Counter disabled (An + 1 reused)
X	X	An	↑	X	X	L[4]	$D_{I/O}$(n)	Counter Set to last valid $\overline{ADS}$ load

5682 tbl 03

NOTES:
1. "H" = V_{IH}, "L" = V_{IL}, "X" = Don't Care.
2. Read and write operations are controlled by the appropriate setting of R/$\overline{W}$, $\overline{CE}_0$, CE_1, $\overline{BE}$n and $\overline{OE}$.
3. Outputs configured in flow-through output mode: if outputs are in pipelined mode the data out will be delayed by one cycle.
4. $\overline{ADS}$ and $\overline{REPEAT}$ are independent of all other memory control signals including $\overline{CE}_0$, CE_1 and $\overline{BE}$n
5. The address counter advances if $\overline{CNTEN}$ = V_{IL} on the rising edge of CLK, regardless of all other memory control signals including $\overline{CE}_0$, CE_1, $\overline{BE}$n.
6. When $\overline{REPEAT}$ is asserted, the counter will reset to the last valid address loaded via $\overline{ADS}$. This value is not set at power-up: a known location should be loaded via $\overline{ADS}$ during initialization if desired. Any subsequent $\overline{ADS}$ access during operations will update the $\overline{REPEAT}$ address location.
7. Address A_{19} must be managed as part of a full depth counter implementation using the IDT70T3509M. For physical addresses 00000_H through $7FFFF_H$ the value of a A_{19} is 0, while for physical addresses 80000_H through $FFFFF_H$ the value of A_{19} is 1. The user needs to keep track of the device counter and make sure that A_{19} is actively driven from 0-to-1 or 1-to-0 and held as needed at the appropriate address boundaries for full depth counter operation and that A_{19} is in the appropriate state when using the $\overline{REPEAT}$ function.

Recommended Operating Temperature and Supply Voltage (1)

Grade	Ambient Temperature	GND	V_{DD}
Commercial	0°C to +70°C	0V	2.5V ± 100mV
Industrial	-40°C to +85°C	0V	2.5V ± 100mV

5682 tbl 04

NOTES:
1. This is the parameter TA. This is the "instant on" case temperature.

Recommended DC Operating Conditions with V_{DDQ} at 2.5V

Symbol	Parameter	Min.	Typ.	Max.	Unit
V_{DD}	Core Supply Voltage	2.4	2.5	2.6	V
V_{DDQ}	I/O Supply Voltage(3)	2.4	2.5	2.6	V
V_{SS}	Ground	0	0	0	V
V_{IH}	Input High Volltage (Address, Control & Data I/O Inputs)(3)	1.7	—	V_{DDQ} + 100mV(2)	V
V_{IH}	Input High Voltage – JTAG	1.7	—	V_{DD} + 100mV(2)	V
V_{IH}	Input High Voltage - ZZ, OPT, PIPE/$\overline{FT}$	V_{DD} - 0.2V	—	V_{DD} + 100mV(2)	V
V_{IL}	Input Low Voltage	-0.3(1)	—	0.7	V
V_{IL}	Input Low Voltage - ZZ, OPT, PIPE/$\overline{FT}$	-0.3(1)	—	0.2	V

5682 tbl 05a

NOTES:
1. V_{IL} (min.) = -1.0V for pulse width less than t_{CYC}/2 or 5ns, whichever is less.
2. V_{IH} (max.) = V_{DDQ} + 1.0V for pulse width less than t_{CYC}/2 or 5ns, whichever is less.
3. To select operation at 2.5V levels on the I/Os and controls of a given port, the OPT pin for that port must be set to V_{SS}(0V), and V_{DDQX} for that port must be supplied as indicated above.

Recommended DC Operating Conditions with V_{DDQ} at 3.3V

Symbol	Parameter	Min.	Typ.	Max.	Unit
V_{DD}	Core Supply Voltage	2.4	2.5	2.6	V
V_{DDQ}	I/O Supply Voltage(3)	3.15	3.3	3.45	V
V_{SS}	Ground	0	0	0	V
V_{IH}	Input High Voltage (Address, Control &Data I/O Inputs)(3)	2.0	—	V_{DDQ} + 150mV(2)	V
V_{IH}	Input High Voltage – JTAG	1.7	—	V_{DD} + 100mV(2)	V
V_{IH}	Input High Voltage - ZZ, OPT, PIPE/$\overline{FT}$	V_{DD} - 0.2V	—	V_{DD} + 100mV(2)	V
V_{IL}	Input Low Voltage	-0.3(1)	—	0.8	V
V_{IL}	Input Low Voltage - ZZ, OPT, PIPE/$\overline{FT}$	-0.3(1)	—	0.2	V

5682 tbl 05b

NOTES:
1. V_{IL} (min.) = -1.0V for pulse width less than t_{CYC}/2, or 5ns, whichever is less.
2. V_{IH} (max.) = V_{DDQ} + 1.0V for pulse width less than t_{CYC}/2 or 5ns, whichever is less.
3. To select operation at 3.3V levels on the I/Os and controls of a given port, the OPT pin for that port must be set to V_{DD} (2.5V), and V_{DDQX} for that port must be supplied as indicated above.

Absolute Maximum Ratings (1)

Symbol	Rating	Com'l & Ind	Unit
V_{TERM} (V_{DD})	V_{DD} Terminal Voltage with Respect to GND	-0.5 to 3.6	V
V_{TERM}(2) (V_{DDQ})	V_{DDQ} Terminal Voltage with Respect to GND	-0.3 to V_{DDQ} + 0.3	V
V_{TERM}(2) (INPUTS and I/O's)	Input and I/O Terminal Voltage with Respect to GND	-0.3 to V_{DDQ} + 0.3	V
T_{BIAS}(3)	Temperature Under Bias	-55 to +125	°C
T_{STG}	Storage Temperature	-65 to +150	°C
T_{JN}	Junction Temperature	+150	°C
I_{OUT}(For V_{DDQ} = 3.3V)	DC Output Current	50	mA
I_{OUT}(For V_{DDQ} = 2.5V)	DC Output Current	40	mA

5682 tbl 06

NOTES:
1. Stresses greater than those listed under ABSOLUTE MAXIMUM RATINGS may cause permanent damage to the device. This is a stress rating only and functional operation of the device at these or any other conditions above those indicated in the operational sections of this specification is not implied. Exposure to absolute maximum rating conditions for extended periods may affect reliability.
2. This is a steady-state DC parameter that applies after the power supply has reached its nominal operating value. Power sequencing is not necessary; however, the voltage on any Input or I/O pin cannot exceed V_{DDQ} during power supply ramp up.
3. Ambient Temperature under DC Bias. No AC Conditions. Chip Deselected.

Capacitance(1)

(T_A = +25°C, F = 1.0MHz) BGA ONLY

Symbol	Parameter	Conditions	Max.	Unit
C_{IN}	Input Capacitance	V_{IN} = 0V	35	pF
C_{OUT}(2)	Output Capacitance	V_{OUT} = 0V	35	pF

5682 tbl 07

NOTES:
1. These parameters are determined by device characterization, but are not production tested.
2. C_{OUT} also references $C_{I/O}$.

DC Electrical Characteristics Over the Operating Temperature and Supply Voltage Range (V_{DD} = 2.5V ± 100mV)

Symbol	Parameter	Test Conditions	70T3509MS		Unit
			Min.	Max.	
$\|I_{LI}\|$	Input Leakage Current(1)	V_{DDQ} = Max., V_{IN} = 0V to V_{DDQ}	—	20	µA
$\|I_{LI}\|$	JTAG & ZZ Input Leakage Current(1,2)	V_{DD} = Max., V_{IN} = 0V to V_{DD}	—	60	µA
$\|I_{LO}\|$	Output Leakage Current(1,3)	$\overline{CE}_0$ = V_{IH} and CE_1 = V_{IL}, V_{OUT} = 0V to V_{DDQ}	—	20	µA
V_{OL} (3.3V)	Output Low Voltage(1)	I_{OL} = +4mA, V_{DDQ} = Min.	—	0.4	V
V_{OH} (3.3V)	Output High Voltage(1)	I_{OH} = -4mA, V_{DDQ} = Min.	2.4	—	V
V_{OL} (2.5V)	Output Low Voltage(1)	I_{OL} = +2mA, V_{DDQ} = Min.	—	0.4	V
V_{OH} (2.5V)	Output High Voltage(1)	I_{OH} = -2mA, V_{DDQ} = Min.	2.0	—	V

5682 tbl 08

NOTES:
1. V_{DDQ} is selectable (3.3V/2.5V) via OPT pins. Refer to p.5 for details.
2. Applicable only for TMS, TDI and $\overline{TRST}$ inputs.
3. Outputs tested in tri-state mode.

DC Electrical Characteristics Over the Operating Temperature and Supply Voltage Range (3) (V_{DD} = 2.5V ± 100mV)

Symbol	Parameter	Test Condition	Version		70T3509MS133 Com'l & Ind Typ.(4)	70T3509MS133 Com'l & Ind Max.	Unit
I_{DD}	Dynamic Operating Current (Both Ports Active)	$\overline{CE}_L$ and $\overline{CE}_R$= V_{IL}, Outputs Disabled, f = f_{MAX}(1)	COM'L	S	800	1120	mA
			IND	S	800	1370	
I_{SB1}(6)	Standby Current (Both Ports - TTL Level Inputs)	$\overline{CE}_L$ = $\overline{CE}_R$ = V_{IH} f = f_{MAX}(1)	COM'L	S	560	760	mA
			IND	S	560	940	
I_{SB2}(6)	Standby Current (One Port - TTL Level Inputs)	$\overline{CE}$"A" = V_{IL} and $\overline{CE}$"B" = V_{IH}(5) Active Port Outputs Disabled, f=f_{MAX}(1)	COM'L	S	680	880	mA
			IND	S	680	1090	
I_{SB3}	Full Standby Current (Both Ports - CMOS Level Inputs)	Both Ports $\overline{CE}_{0L}$ = $\overline{CE}_{0R}$ ≥ V_{DDQ} - 0.2V and CE_{1L} = CE_{1R} ≤ 0.2V, V_{IN} ≥ V_{DDQ} - 0.2V or V_{IN} ≤ 0.2V, f = 0(2)	COM'L	S	20	60	mA
			IND	S	20	80	
I_{SB4}(6)	Full Standby Current (One Port - CMOS Level Inputs)	$\overline{CE}$"A" ≤ 0.2V and $\overline{CE}$"B" ≥ V_{DDQ} - 0.2V(5) V_{IN} ≥ V_{DDQ} - 0.2V or V_{IN} ≤ 0.2V Active Port, Outputs Disabled, f = f_{MAX}(1)	COM'L	S	680	880	mA
			IND	S	680	1090	
I_{ZZ}	Sleep Mode Current (Both Ports - TTL Level Inputs)	ZZ_L = ZZ_R = V_{IH} f=f_{MAX}(1)	COM'L	S	20	60	mA
			IND	S	20	80	

5682 tbl 09

NOTES:

1. At f = f_{MAX}, address and control lines (except Output Enable) are cycling at the maximum frequency clock cycle of 1/t_{CYC}, using "AC TEST CONDITIONS".
2. f = 0 means no address, clock, or control lines change. Applies only to input at CMOS level standby.
3. Port "A" may be either left or right port. Port "B" is the opposite from port "A".
4. V_{DD} = 2.5V, T_A = 25°C for Typ, and are not production tested. $I_{DD\,DC}$(f=0) = 30mA (Typ).
5. $\overline{CE}_X$ = V_{IL} means $\overline{CE}_{0X}$ = V_{IL} and CE_{1X} = V_{IH} (enabled)
   $\overline{CE}_X$ = V_{IH} means $\overline{CE}_{0X}$ = V_{IH} and CE_{1X} = V_{IL} (disabled)
   $\overline{CE}_X$ ≤ 0.2V means $\overline{CE}_{0X}$ ≤ 0.2V and CE_{1X} ≥ V_{DDQ} - 0.2V (enabled - CMOS levels)
   $\overline{CE}_X$ ≥ V_{DDQ} - 0.2V means $\overline{CE}_{0X}$ ≥ V_{DDQ} - 0.2V and CE_{1X} ≤ 0.2V (disabled - CMOS levels)
   "X" represents "L" for left port or "R" for right port.
6. I_{SB1}, I_{SB2} and I_{SB4} will all reach full standby levels (I_{SB3}) on the appropriate port(s) if ZZ_L and/or ZZ_R = V_{IH}.

AC Test Conditions (V_{DDQ} - 3.3V/2.5V)

Input Pulse Levels (Address & Controls)	GND to 3.0V/GND to 2.4V
Input Pulse Levels (I/Os)	GND to 3.0V/GND to 2.4V
Input Rise/Fall Times	2ns
Input Timing Reference Levels	1.5V/1.25V
Output Reference Levels	1.5V/1.25V
Output Load	Figure 1

5682 tbl 10

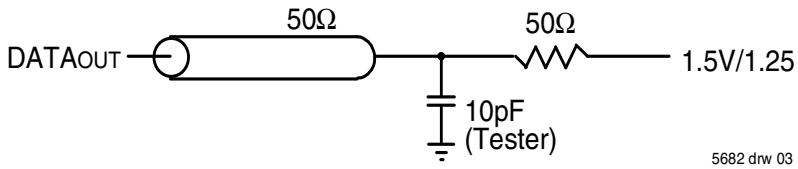

Figure 1. AC Output Test load.

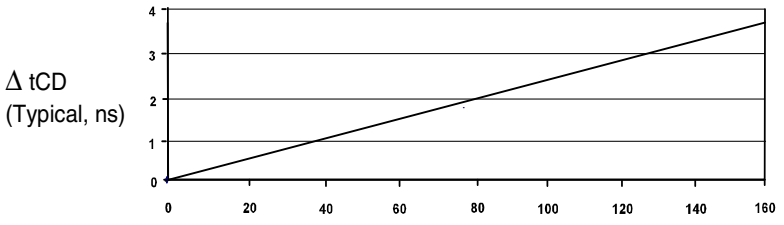

AC Electrical Characteristics Over the Operating Temperature Range (Read and Write Cycle Timing) [2,3] (V_{DD} = 2.5V ± 100mV, T_A = 0°C to +70°C)

		70T3509MS133 Com'l & Ind		
Symbol	**Parameter**	**Min.**	**Max.**	**Unit**
t_{CYC1}	Clock Cycle Time (Flow-Through)[1]	25	—	ns
t_{CYC2}	Clock Cycle Time (Pipelined)[1]	7.5	—	ns
t_{CH1}	Clock High Time (Flow-Through)[1]	10	—	ns
t_{CL1}	Clock Low Time (Flow-Through)[1]	10	—	ns
t_{CH2}	Clock High Time (Pipelined)[2]	3	—	ns
t_{CL2}	Clock Low Time (Pipelined)[1]	3	—	ns
t_{SA}	Address Setup Time	1.8	—	ns
t_{HA}	Address Hold Time	0.5	—	ns
t_{SC}	Chip Enable Setup Time	1.8	—	ns
t_{HC}	Chip Enable Hold Time	0.5	—	ns
t_{SB}	Byte Enable Setup Time	1.8	—	ns
t_{HB}	Byte Enable Hold Time	0.5	—	ns
t_{SW}	R/W Setup Time	1.8	—	ns
t_{HW}	R/W Hold Time	0.5	—	ns
t_{SD}	Input Data Setup Time	1.8	—	ns
t_{HD}	Input Data Hold Time	0.5	—	ns
t_{SAD}	$\overline{ADS}$ Setup Time	1.8	—	ns
t_{HAD}	$\overline{ADS}$ Hold Time	0.5	—	ns
t_{SCN}	$\overline{CNTEN}$ Setup Time	1.8	—	ns
t_{HCN}	$\overline{CNTEN}$ Hold Time	0.5	—	ns
t_{SRPT}	$\overline{REPEAT}$ Setup Time	1.8	—	ns
t_{HRPT}	$\overline{REPEAT}$ Hold Time	0.5	—	ns
t_{OE}	Output Enable to Data Valid	—	4.6	ns
t_{OLZ}[4]	Output Enable to Output Low-Z	1	—	ns
t_{OHZ}[4]	Output Enable to Output High-Z	1	4.2	ns
t_{CD1}	Clock to Data Valid (Flow-Through)[1]	—	15	ns
t_{CD2}	Clock to Data Valid (Pipelined)[1]	—	4.2	ns
t_{DC}	Data Output Hold After Clock High	1	—	ns
t_{CKHZ}[4]	Clock High to Output High-Z	1	4.2	ns
t_{CKLZ}[4]	Clock High to Output Low-Z	1	—	ns
t_{INS}	Interrupt Flag Set Time	—	7	ns
t_{INR}	Interrupt Flag Reset Time	—	7	ns
t_{COLS}	Collision Flag Set Time	—	4.2	ns
t_{COLR}	Collision Flag Reset Time	—	4.2	ns
t_{ZZSC}	Sleep Mode Set Cycles	2	—	cycles
t_{ZZRC}	Sleep Mode Recovery Cycles	3	—	cycles
Port-to-Port Delay				
t_{CO}	Clock-to-Clock Offset	6	—	ns

5682 tbl 11

NOTES:

1. The Pipelined output parameters (t_{CYC2}, t_{CD2}) apply to either or both left and right ports when $\overline{FT}$/PIPE$_X$ = V_{DD} (2.5V). Flow-through parameters (t_{CYC1}, t_{CD1}) apply when $\overline{FT}$/PIPE = V_{SS} (0V) for that port.
2. All input signals are synchronous with respect to the clock except for the asynchronous Output Enable ($\overline{OE}$), $\overline{FT}$/PIPE and OPT. $\overline{FT}$/PIPE and OPT should be treated as DC signals, i.e. steady state during operation.
3. These values are valid for either level of V_{DDQ} (3.3V/2.5V). See page 6 for details on selecting the desired operating voltage levels for each port.
4. Guaranteed by design (not production tested).

Timing Waveform of Read Cycle for Pipelined Operation ($\overline{FT}$/PIPE'X' = V_{IH})(1,2)

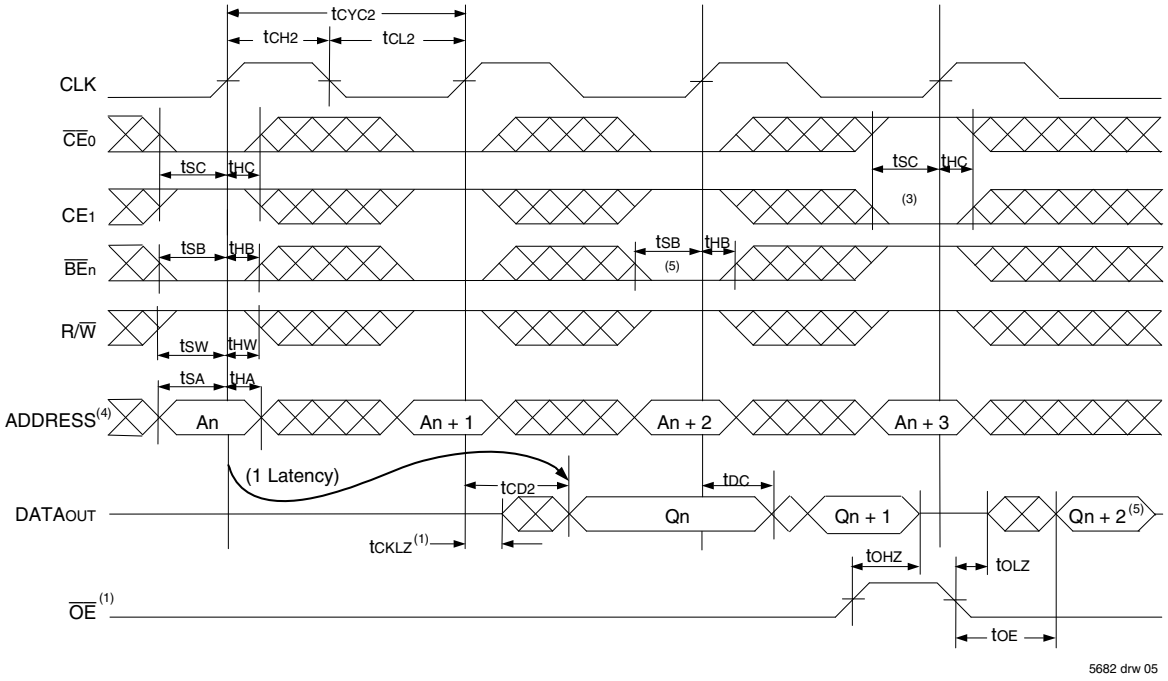

Timing Waveform of Read Cycle for Flow-Through Output ($\overline{FT}$/PIPE"X" = V_{IL})(1,2,6)

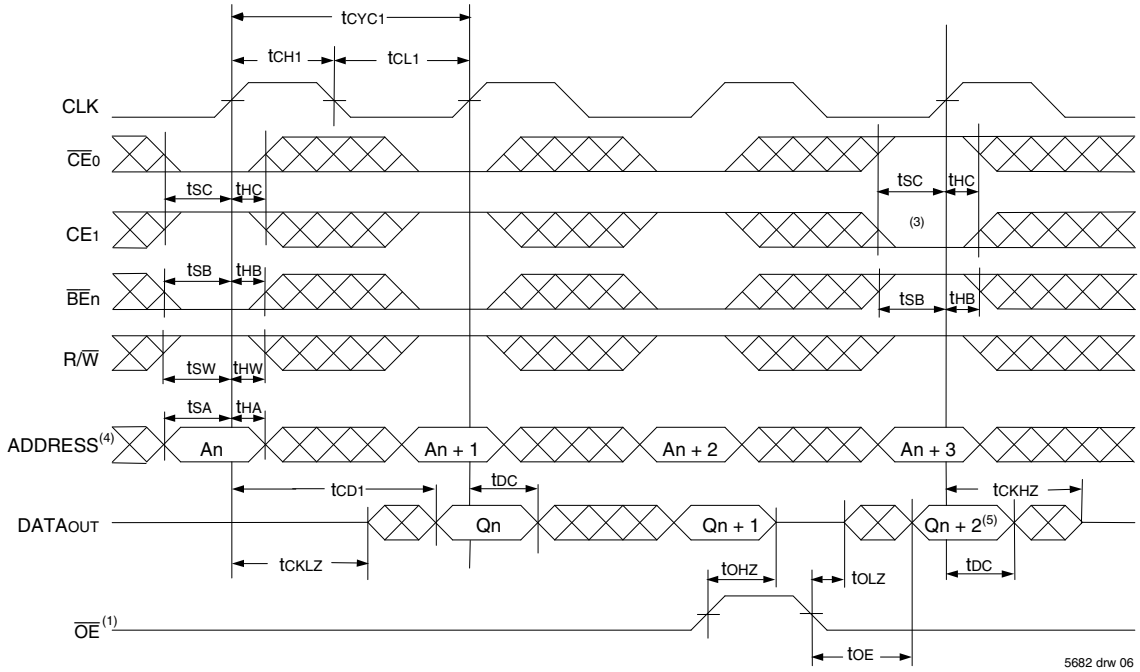

NOTES:

1. $\overline{OE}$ is asynchronously controlled; all other inputs depicted in the above waveforms are synchronous to the rising clock edge.
2. $\overline{ADS}$ = V_{IL}, $\overline{CNTEN}$ and $\overline{REPEAT}$ = V_{IH}.
3. The output is disabled (High-Impedance state) by $\overline{CE}_0$ = V_{IH}, CE_1 = V_{IL}, $\overline{BE}_n$ = V_{IH} following the next rising edge of the clock. Refer to Truth Table 1.
4. Addresses do not have to be accessed sequentially since $\overline{ADS}$ = V_{IL} constantly loads the address on the rising edge of the CLK; numbers are for reference use only.
5. If $\overline{BE}_n$ was HIGH, then the appropriate Byte of $DATA_{OUT}$ for Qn + 2 would be disabled (High-Impedance state).
6. "x" denotes Left or Right port. The diagram is with respect to that port.

Timing Waveform of Left Port Write to Pipelined Right Port Read(1,2,4)

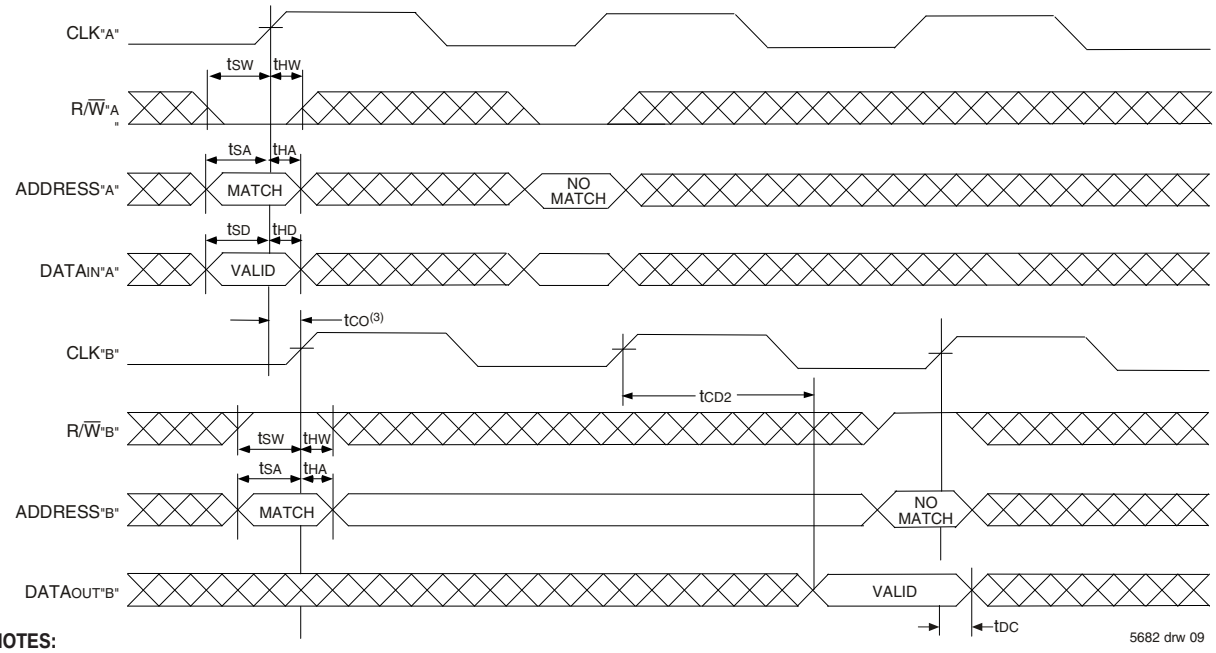

NOTES:
1. $\overline{CE}_0$, $\overline{BE}_n$, and $\overline{ADS}$ = V_{IL}; CE_1, $\overline{CNTEN}$, and $\overline{REPEAT}$ = V_{IH}.
2. $\overline{OE}$ = V_{IL} for Port "B", which is being read from. $\overline{OE}$ = V_{IH} for Port "A", which is being written to.
3. If $t_{CO} \leq$ minimum specified, then data from Port "B" read is not valid until following Port "B" clock cycle (ie, time from write to valid read on opposite port will be $t_{CO} + 2\ t_{CYC2} + t_{CD2}$). If t_{CO} > minimum, then data from Port "B" read is available on first Port "B" clock cycle (ie, time from write to valid read on opposite port will be $t_{CO} + t_{CYC2} + t_{CD2}$).
4. All timing is the same for Left and Right ports. Port "A" may be either Left or Right port. Port "B" is the opposite of Port "A"

Timing Waveform with Port-to-Port Flow-Through Read(1,2,4)

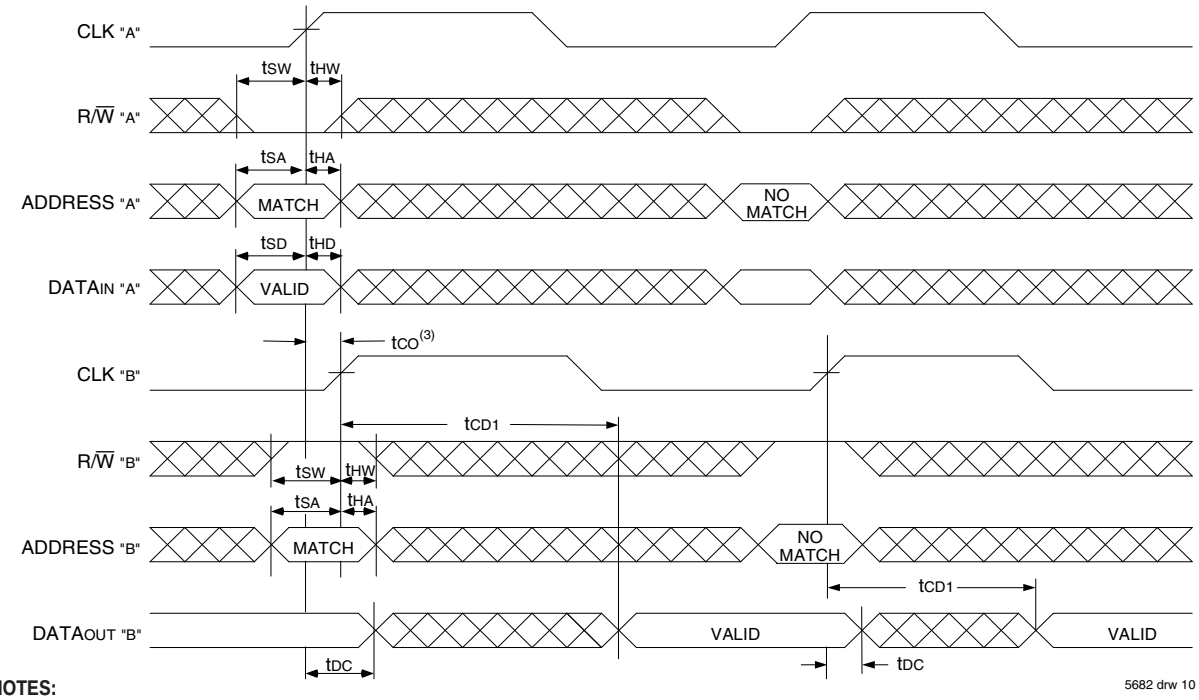

NOTES:
1. $\overline{CE}_0$, $\overline{BE}$n, and $\overline{ADS}$ = V_{IL}; CE_1, $\overline{CNTEN}$, and $\overline{REPEAT}$ = V_{IH}.
2. $\overline{OE}$ = V_{IL} for the Right Port, which is being read from. $\overline{OE}$ = V_{IH} for the Left Port, which is being written to.
3. If $t_{CO} \leq$ minimum specified, then data from Port "B" read is not valid until following Port "B" clock cycle (i.e., time from write to valid read on opposite port will be $t_{CO} + t_{CYC} + t_{CD1}$). If t_{CO} > minimum, then data from Port "B" read is available on first Port "B" clock cycle (i.e., time from write to valid read on opposite port will be $t_{CO} + t_{CD1}$).
4. All timing is the same for both left and right ports. Port "A" may be either left or right port. Port "B" is the opposite of Port "A".

Timing Waveform of Pipelined Read-to-Write-to-Read ($\overline{OE}$ = VIL)(2)

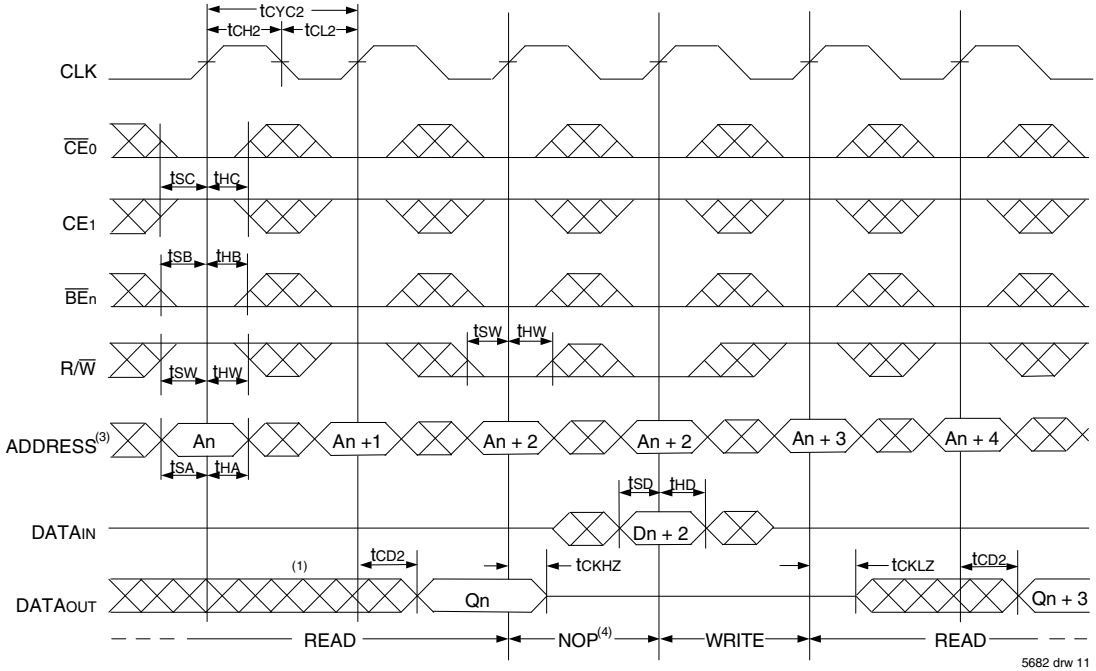

NOTES:

1. Output state (High, Low, or High-impedance) is determined by the previous cycle control signals.
2. $\overline{CE_0}$, $\overline{BE_n}$, and $\overline{ADS}$ = VIL; CE1, $\overline{CNTEN}$, and $\overline{REPEAT}$ = VIH. "NOP" is "No Operation".
3. Addresses do not have to be accessed sequentially since $\overline{ADS}$ = VIL constantly loads the address on the rising edge of the CLK; numbers are for reference use only.
4. "NOP" is "No Operation." Data in memory at the selected address may be corrupted and should be rewritten to guarantee data integrity.

Timing Waveform of Pipelined Read-to-Write-to-Read ($\overline{OE}$ Controlled)(2)

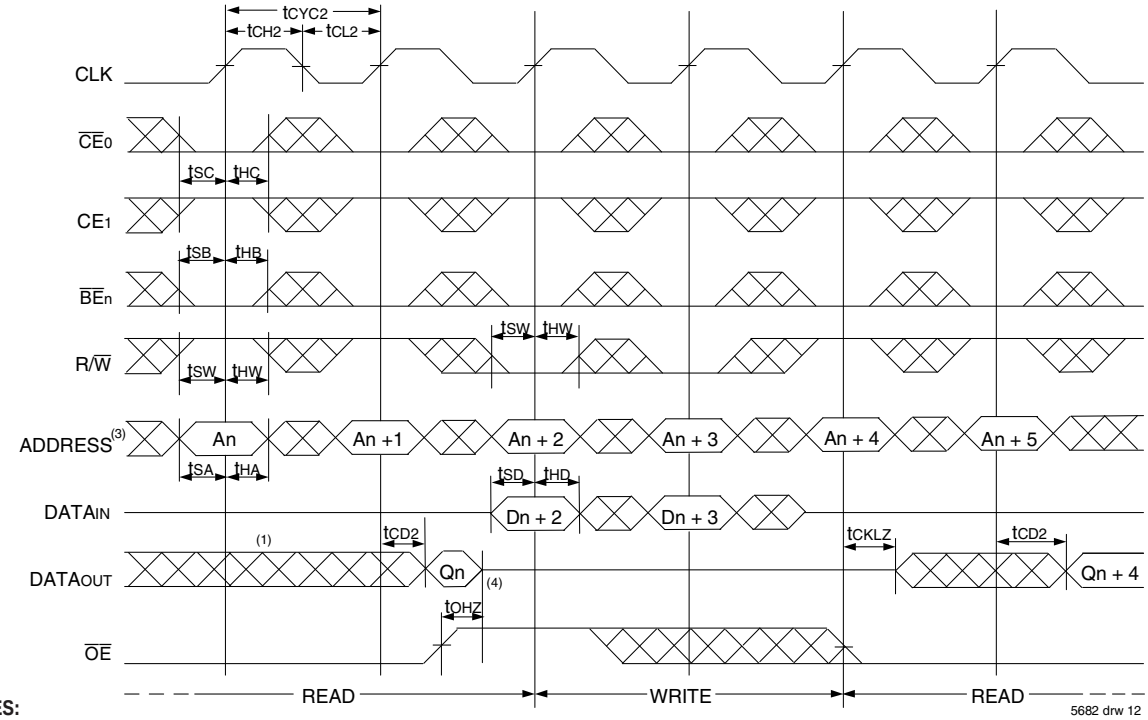

NOTES:

1. Output state (High, Low, or High-impedance) is determined by the previous cycle control signals.
2. $\overline{CE_0}$, $\overline{BE_n}$, and $\overline{ADS}$ = VIL; CE1, $\overline{CNTEN}$, and $\overline{REPEAT}$ = VIH.
3. Addresses do not have to be accessed sequentially since $\overline{ADS}$ = VIL constantly loads the address on the rising edge of the CLK; numbers are for reference use only.
4. This timing does not meet requirements for fastest speed grade. This waveform indicates how logically it could be done if timing so allows.

Timing Waveform of Flow-Through Read-to-Write-to-Read ($\overline{OE}$ = VIL)(2)

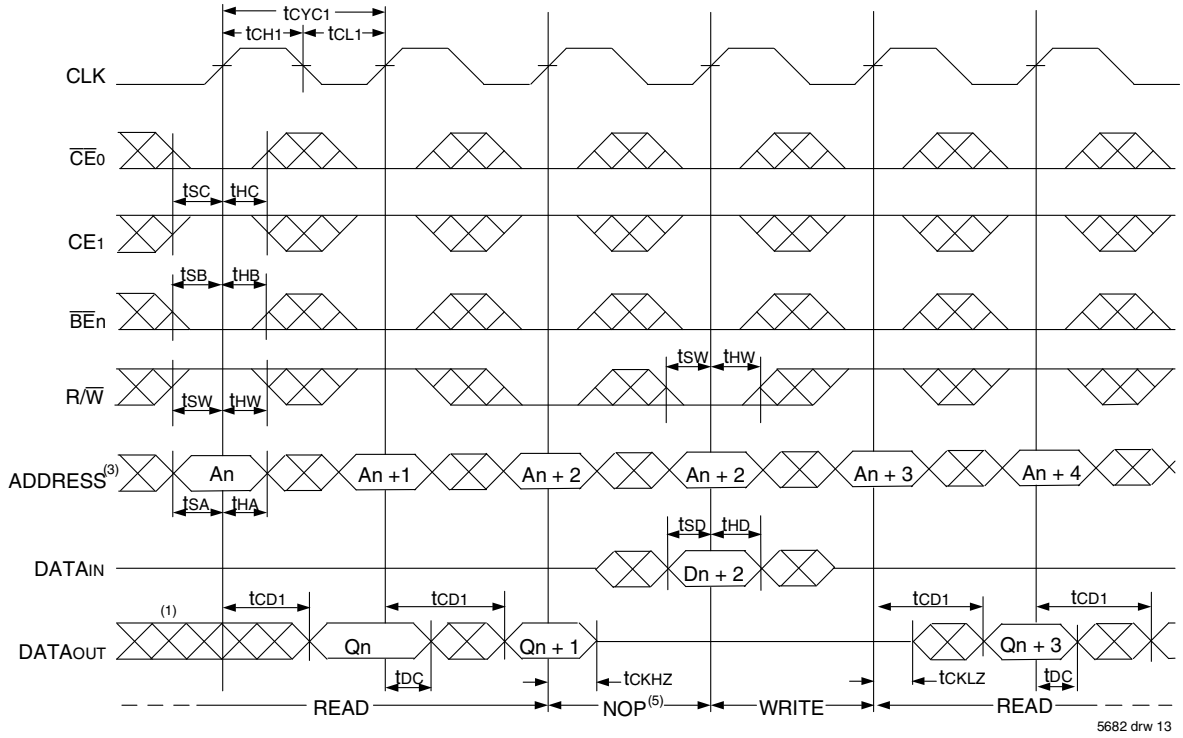

Timing Waveform of Flow-Through Read-to-Write-to-Read ($\overline{OE}$ Controlled)(2)

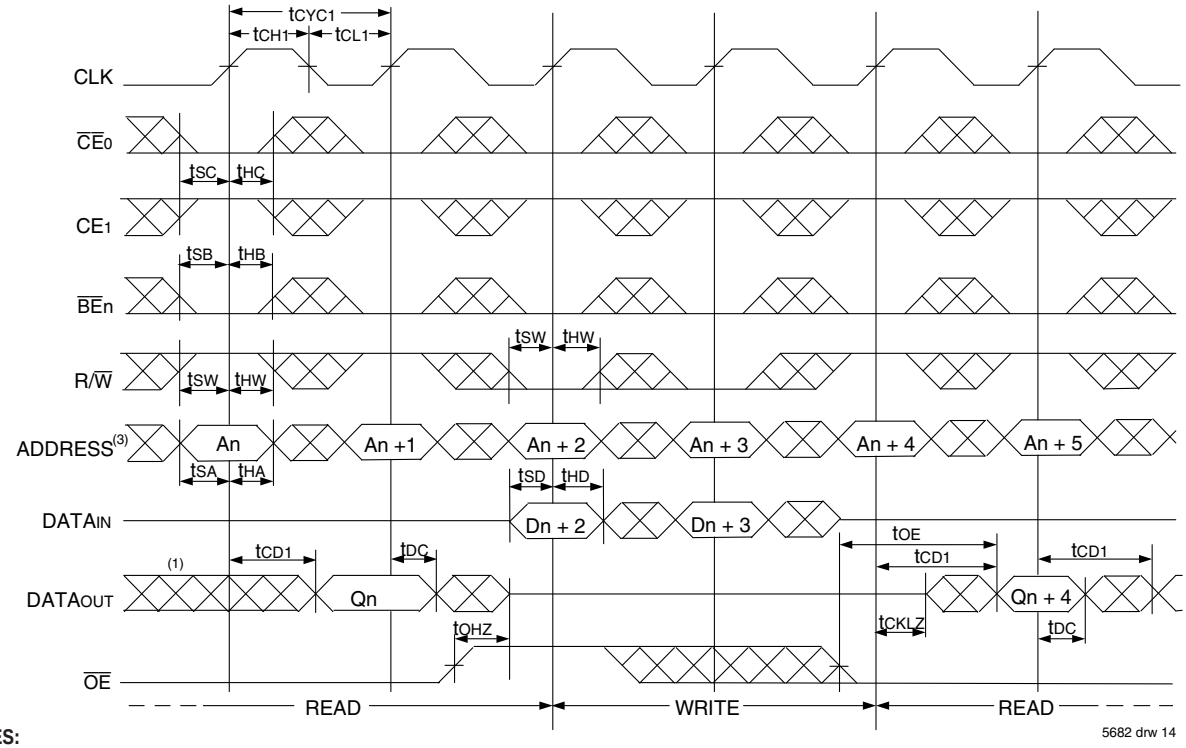

NOTES:

1. Output state (High, Low, or High-impedance) is determined by the previous cycle control signals.
2. $\overline{CE_0}$, $\overline{BE}n$, and $\overline{ADS}$ = VIL; CE1, $\overline{CNTEN}$, and $\overline{REPEAT}$ = VIH.
3. Addresses do not have to be accessed sequentially since $\overline{ADS}$ = VIL constantly loads the address on the rising edge of the CLK; numbers are for reference use only.
4. "NOP" is "No Operation." Data in memory at the selected address may be corrupted and should be rewritten to guarantee data integrity.

Timing Waveform of Pipelined Read with Address Counter Advance(1)

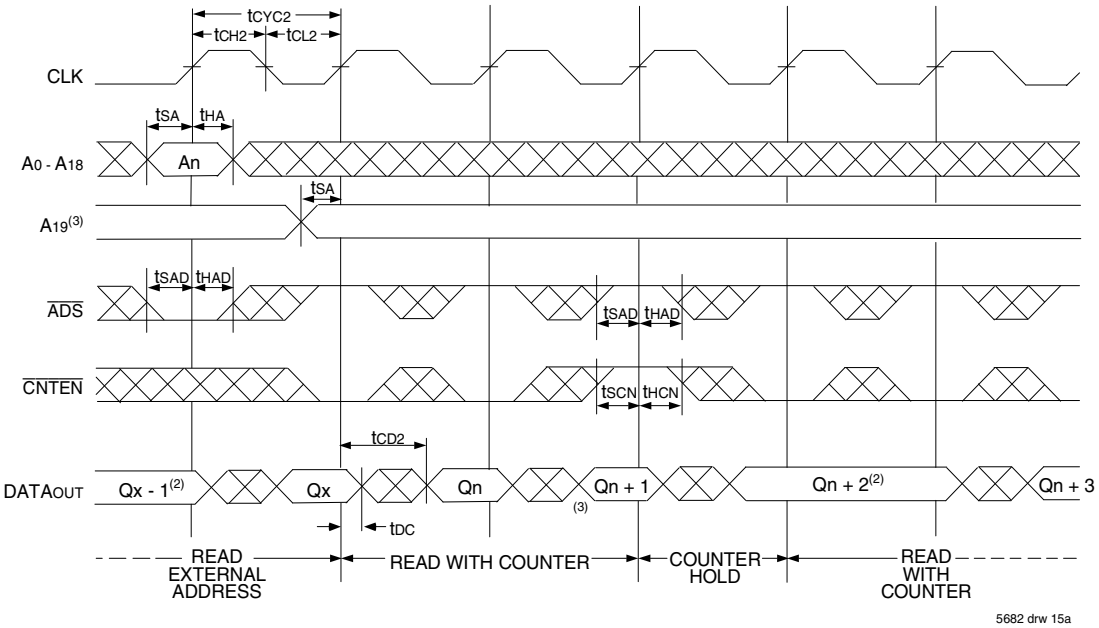

Timing Waveform of Flow-Through Read with Address Counter Advance(1)

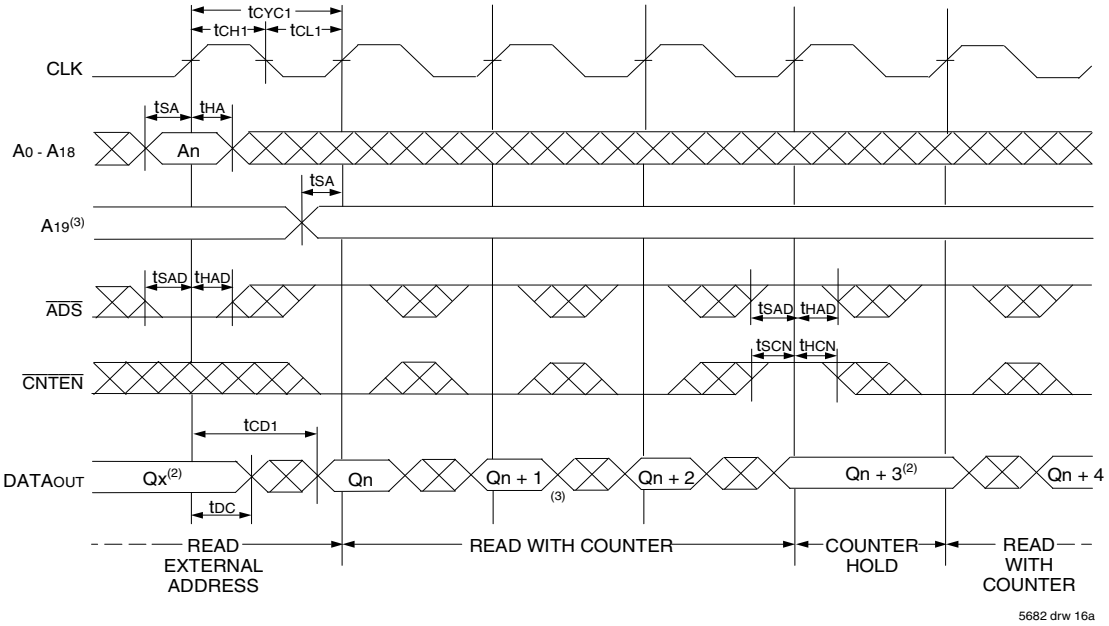

NOTES:

1. $\overline{CE_0}$, $\overline{OE}$, $\overline{BE}n$ = V_{IL}; CE_1, R/$\overline{W}$, and $\overline{REPEAT}$ = V_{IH}.
2. If there is no address change via $\overline{ADS}$ = V_{IL} (loading a new address) or $\overline{CNTEN}$ = V_{IL} (advancing the address), i.e. $\overline{ADS}$ = V_{IH} and $\overline{CNTEN}$ = V_{IH}, then the data remains constant for subsequent clocks.
3. Address A_{19} must be managed as part of a full depth counter implementation using the IDT70T3509M. For physical addresses 00000H through 7FFFFH the value of a A_{19} is 0, while for physical addresses 80000H through FFFFFH the value of A_{19} is 1. The user needs to keep track of the device counter and make sure that A_{19} is actively driven from 0-to-1 or 1-to-0 and held as needed at the appropriate address boundaries for full depth counter operation. As shown this transition reflects An = 7FFFFH or FFFFFH.

Timing Waveform of Write with Address Counter Advance (Flow-through or Pipelined Inputs)(1)

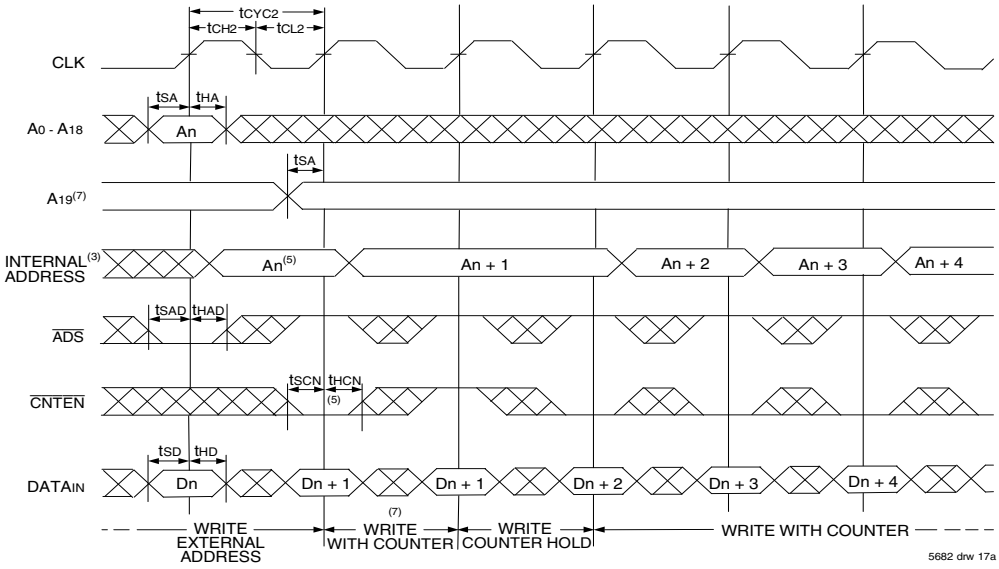

Timing Waveform of Counter Repeat(2,6)

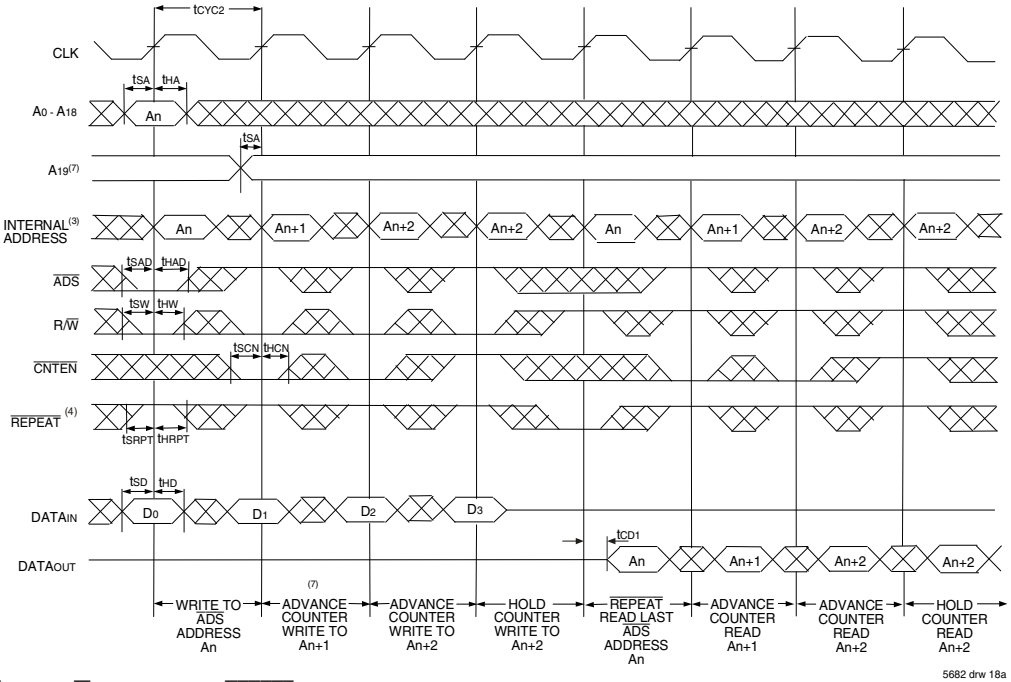

NOTES:

1. $\overline{CE_0}$, $\overline{BE_n}$, and R/$\overline{W}$ = V_{IL}; CE_1 and $\overline{REPEAT}$ = V_{IH}.
2. $\overline{CE_0}$, $\overline{BE_n}$ = V_{IL}; CE_1 = V_{IH}.
3. The "Internal Address" is equal to the "External Address" when $\overline{ADS}$ = V_{IL} and equals the counter output when $\overline{ADS}$ = V_{IH}.
4. No dead cycle exists during $\overline{REPEAT}$ operation. A READ or WRITE cycle may be coincidental with the counter $\overline{REPEAT}$ cycle: Address loaded by last valid $\overline{ADS}$ load will be accessed. For more information on $\overline{REPEAT}$ function refer to Truth Table II. A_{19} must be in the appropriate state when using the REPEAT function to guarantee the correct address location is loaded.
5. $\overline{CNTEN}$ = V_{IL} advances Internal Address from 'An' to 'An +1'. The transition shown indicates the time required for the counter to advance. The 'An +1'Address is written to during this cycle.
6. For Pipelined Mode user should add 1 cycle latency for outputs as per timing waveform of read cycle for pipelined operations.
7. Address A_{19} must be managed as part of a full depth counter implementation using the IDT70T3509M. For physical addresses 00000_H through $7FFFF_H$ the value of a A_{19} is 0, while for physical addresses 80000_H through $FFFFF_H$ the value of A_{19} is 1. The user needs to keep track of the device counter and make sure that A_{19} is actively driven from 0-to-1 or 1-to-0 and held as needed at the appropriate address boundaries for full depth counter operation. As shown this transition reflects An = $7FFFF_H$ or $FFFFF_H$.

Waveform of Interrupt Timing(2)

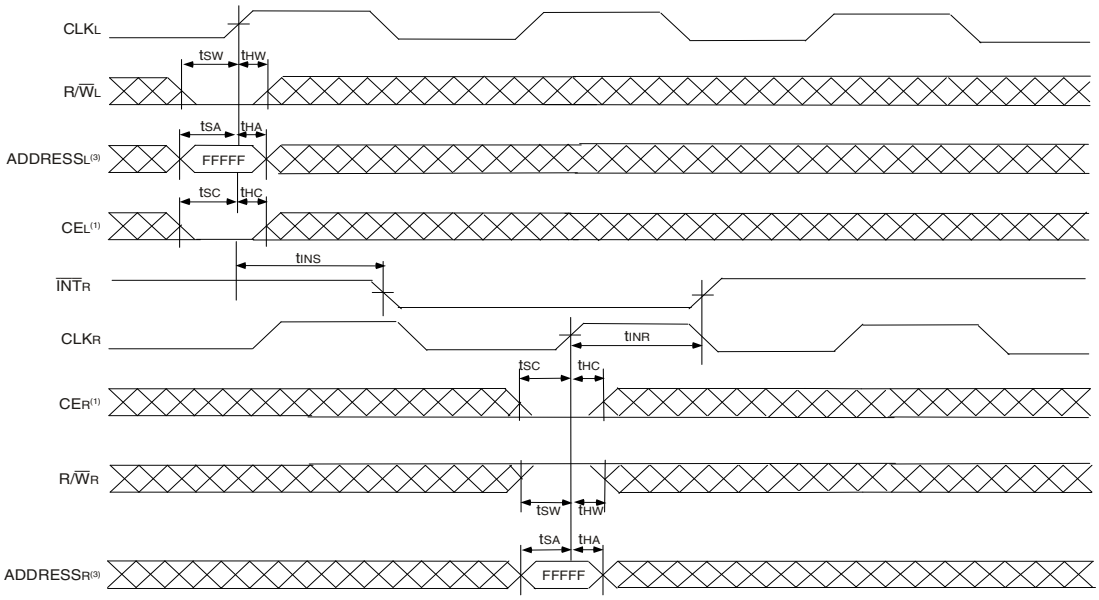

5682 drw 19

NOTES:
1. $\overline{CE}_0$ = V_{IL} and CE_1 = V_{IH}.
2. All timing is the same for Left and Right ports.
3. Address is for internal register, not the external bus, i.e. address needs to be qualified by one of the Address counter control signals.

Truth Table III - Interrupt Flag(1)

Left Port					Right Port					
CLKL	R/$\overline{W}$L(2)	CEL(2)	A19L-A0L	$\overline{INT}$L	CLKR	R/$\overline{W}$R(2)	CER(2)	A19R-A0R	$\overline{INT}$R	Function
↑	L	L	FFFFF	X	↑	X	X	X	L	Set Right $\overline{INT}$R Flag
↑	X	X	X	X	↑	H	L	FFFFF	H	Reset Right $\overline{INT}$R Flag
↑	X	X	X	L	↑	L	L	FFFFE	X	Set Left $\overline{INT}$L Flag
↑	H	L	FFFFE	H	↑	X	X	X	X	Reset Left $\overline{INT}$L Flag

5682 tbl 12

NOTES:
1. $\overline{INT}_L$ and $\overline{INT}_R$ must be initialized at power-up by Resetting the flags.
2. $\overline{CE}_0$ = V_{IL} and CE_1 = V_{IH}, R/$\overline{W}$ and CE are synchronous with respect to the clock and need valid set-up and hold times.
3. Address is for internal register, not the external bus, i.e. address needs to be qualified by one of the Address counter control signals.

Timing Waveform - Entering Sleep Mode (1,2)

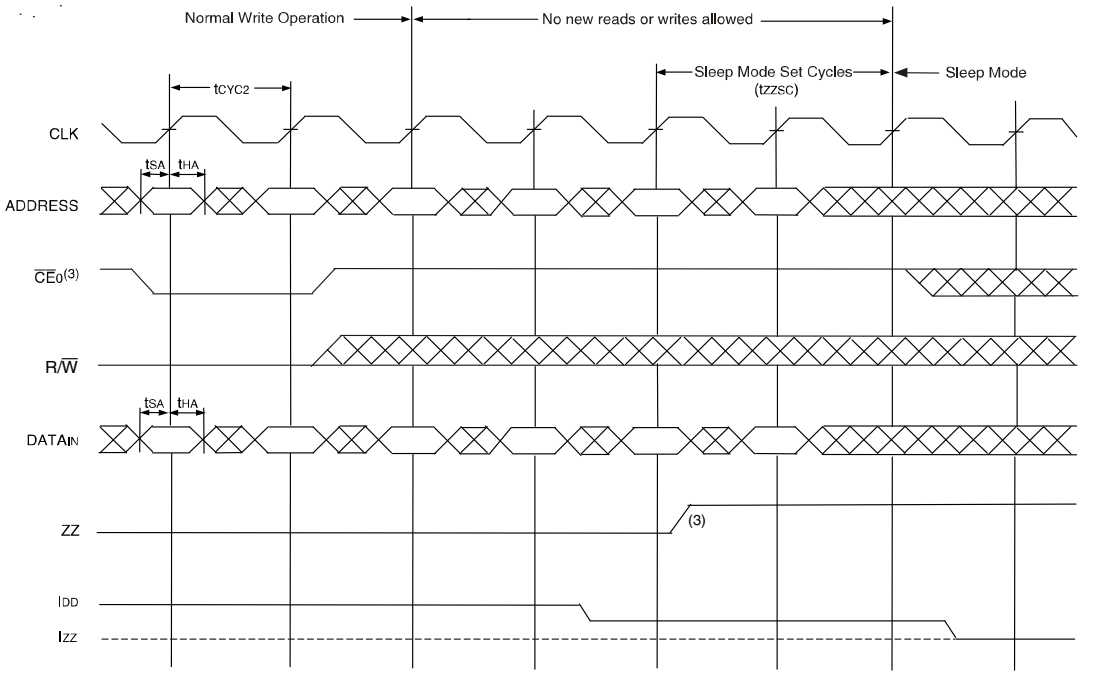

Timing Waveform - Exiting Sleep Mode (1,2)

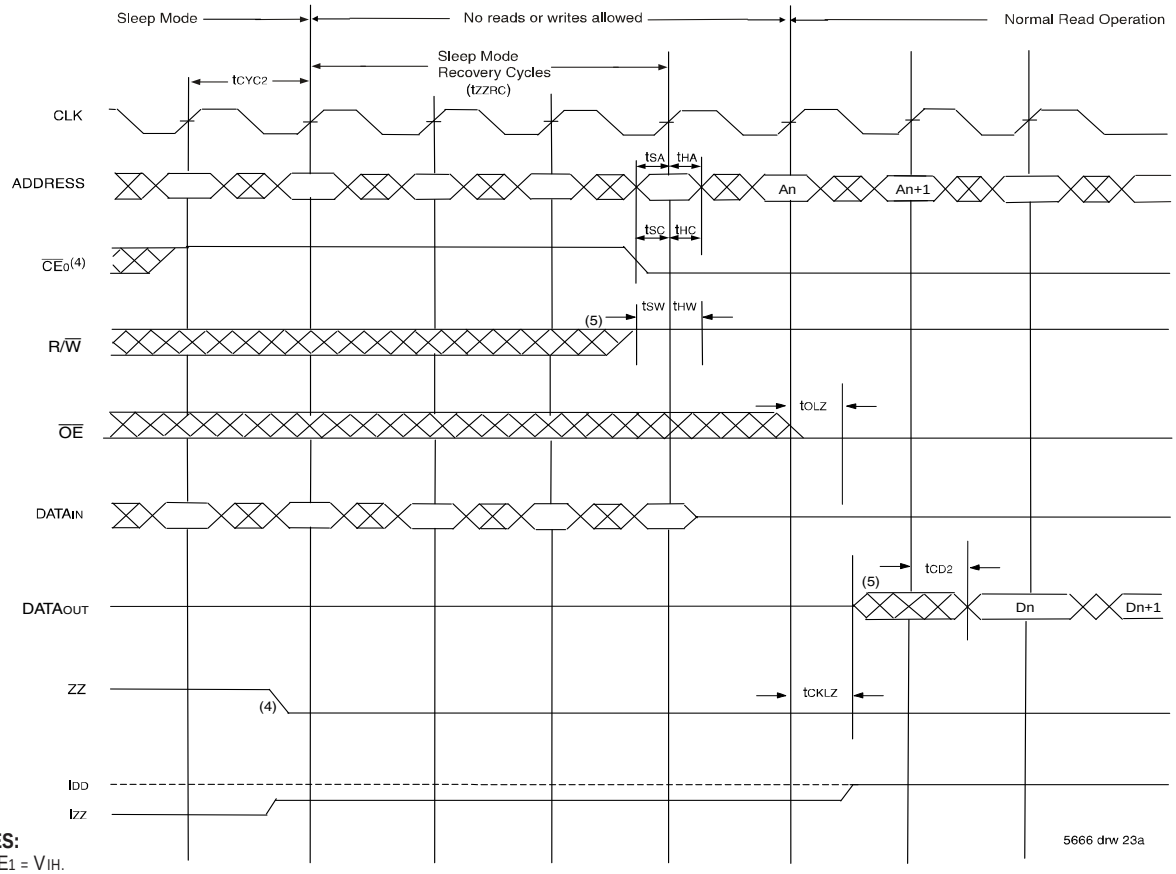

NOTES:

1. CE1 = VIH.
2. All timing is same for Left and Right ports.
3. $\overline{CE}_0$ has to be deactivated ($\overline{CE}_0$ = VIH) three cycles prior to asserting ZZ (ZZx = VIH) and held for two cycles after asserting ZZ (ZZx = VIH).
4. $\overline{CE}_0$ has to be deactivated ($\overline{CE}_0$ = VIH) one cycle prior to de-asserting ZZ (ZZx = VIL) and held for three cycles after de-asserting ZZ (ZZx = VIL).
5. The device must be in Read Mode (R/$\overline{W}$ High) when exiting sleep mode. Outputs are active but data is not valid until the following cycle.

Functional Description

The IDT70T3509M provides a true synchronous Dual-Port Static RAM interface. Registered inputs provide minimal set-up and hold times on address, data, and all critical control inputs. All internal registers are clocked on the rising edge of the clock signal, however, the self-timed internal write pulse width is independent of the cycle time.

An asynchronous output enable is provided to ease asynchronous bus interfacing. Counter enable inputs are also provided to stall the operation of the address counters for fast interleaved memory applications.

The combination of a HIGH on $\overline{CE}_0$ and a LOW on CE_1 for one clock cycle will power down the internal circuitry to reduce static power consumption. Multiple chip enables allow easier banking of multiple IDT70T3509Ms for depth expansion configurations. Two cycles are required with $\overline{CE}_0$ LOW and CE_1 HIGH to reactivate the outputs.

Width Expansion

The IDT70T3509M can be used in applications requiring expanded width. Through combining the control signals, the devices can be grouped as necessary to accommodate applications needing 72-bits or wider.

Sleep Mode

The IDT70T3509M is equipped with an optional sleep or low power mode on both ports. The sleep mode pin on both ports is asynchronous and active high. During normal operation, the ZZ pin is pulled low. When ZZ is pulled high, the port will enter sleep mode where it will meet lowest possible power conditions. The sleep mode timing diagram shows the modes of operation: Normal Operation, No Read/Write Allowed and Sleep Mode.

For normal operation all inputs must meet setup and hold times prior to sleep and after recovering from sleep. Clocks must also meet cycle high and low times during these periods. Three cycles prior to asserting ZZ ($ZZx = V_{IH}$) and three cycles after de-asserting ZZ ($ZZx = V_{IL}$), the device must be disabled via the chip enable pins. If a write or read operation occurs during these periods, the memory array may be corrupted. Validity of data out from the RAM cannot be guaranteed immediately after ZZ is asserted (prior to being in sleep). When exiting sleep mode, the device must be in Read mode ($R/\overline{W}x = V_{IH}$)when chip enable is asserted, and the chip enable must be valid for one full cycle before a read will result in the output of valid data.

During sleep mode the RAM automatically deselects itself. The RAM disconnects its internal clock buffer. The external clock may continue to run without impacting the RAMs sleep current (I_{ZZ}). All outputs will remain in high-Z state while in sleep mode. All inputs are allowed to toggle. The RAM will not be selected and will not perform any reads or writes.

JTAG Functionality and Configuration

The IDT70T3509M is composed of four independent memory arrays, and thus cannot be treated as a single JTAG device in the scan chain. The four arrays (A, B, C and D) each have identical characteristics and commands but must be treated as separate entities in JTAG operations. Please refer to Figure 2.

JTAG signaling must be provided serially to each array and utilize the information provided in the Identification Register Definitions, Scan Register Sizes, and System Interface Parameter tables. Specifically, all serial commands must be issued to the IDT70T3509M in the following sequence: Array D, Array C, Array B, Array A. Please reference Application Note AN-411, "JTAG Testing of Multichip Modules" for specific instructions on performing JTAG testing on the IDT70T3509M. AN-411 is available at www.idt.com.

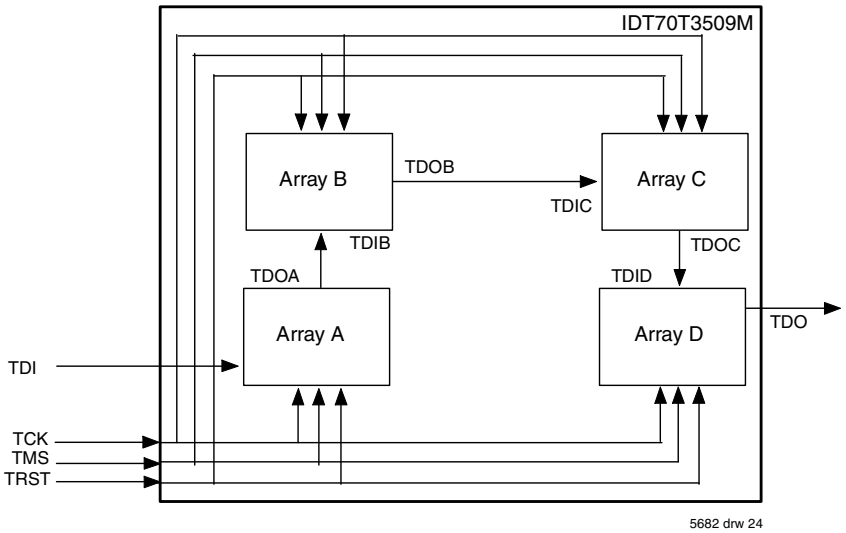

Figure 2. JTAG Configuration for IDT70T3509M

JTAG Timing Specifications

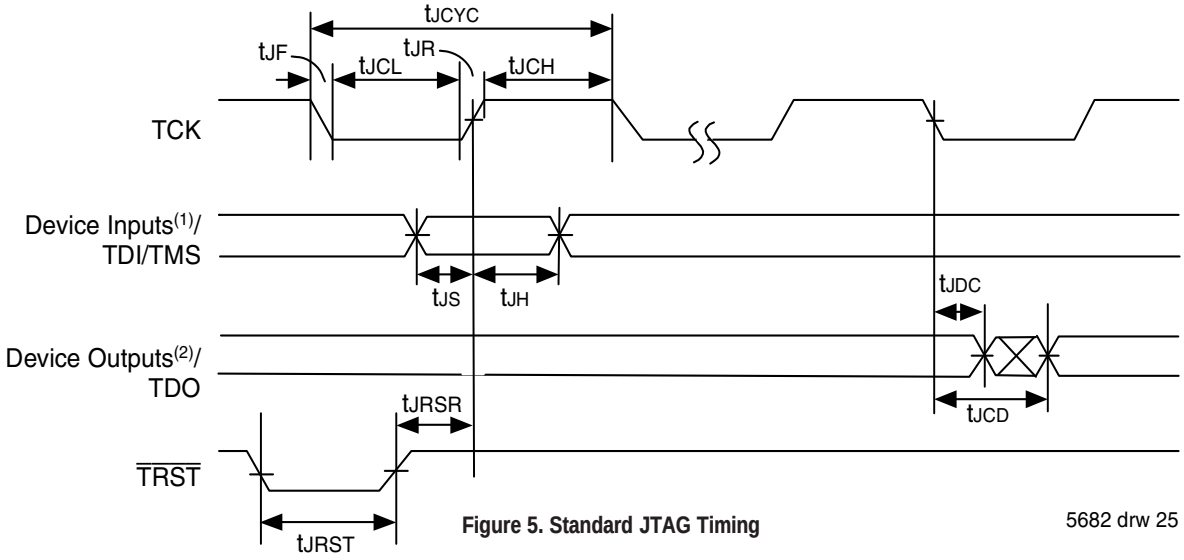

Figure 5. Standard JTAG Timing

5682 drw 25

NOTES:
1. Device inputs = All device inputs except TDI, TMS, and TRST.
2. Device outputs = All device outputs except TDO.

JTAG AC Electrical Characteristics (1,2,3,4)

Symbol	Parameter	70T3509M		
		Min.	Max.	Units
tJCYC	JTAG Clock Input Period	100	—	ns
tJCH	JTAG Clock HIGH	40	—	ns
tJCL	JTAG Clock Low	40	—	ns
tJR	JTAG Clock Rise Time	—	3(1)	ns
tJF	JTAG Clock Fall Time	—	3(1)	ns
tJRST	JTAG Reset	50	—	ns
tJRSR	JTAG Reset Recovery	50	—	ns
tJCD	JTAG Data Output	—	25	ns
tJDC	JTAG Data Output Hold	0	—	ns
tJS	JTAG Setup	15	—	ns
tJH	JTAG Hold	15	—	ns

5682 tbl 15

NOTES:
1. Guaranteed by design.
2. 30pF loading on external output signals.
3. Refer to AC Electrical Test Conditions stated earlier in this document.
4. JTAG operations occur at one speed (10MHz). The base device may run at any speed specified in this datasheet.

Identification Register Definitions

Instruction Field Array D	Value Array D	Instruction Field Array C	Value Array C	Instruction Field Array B	Value Array B	Instruction Field Array A	Value Array A	Description
Revision Number (31:28)	0x0	Revision Number (63:60)	0x0	Revision Number (95:92)	0x0	Revision Number (127:124)	0x0	Reserved for Version number
IDT Device ID (27:12)	0x333	IDT Device ID (59:44)	0x333	IDT Device ID (91:76)	0x333	IDT Device ID (123:108)	0x333	Defines IDT Part number
IDT JEDEC ID (11:1)	0x33	IDT JEDEC ID (43:33)	0x33	IDT JEDEC ID (75:65)	0x33	IDT JEDEC ID (107:97)	0x33	Allows unique identification of device vendor as IDT
ID Register Indicator Bit (Bit 0)	1	ID Register Indicator Bit (Bit 32)	1	ID Register Indicator Bit (Bit 64)	1	ID Register Indicator Bit (Bit 96)	1	Indicates the presence of an ID Register

5682 tbl 16

Scan Register Sizes

Register Name	Bit Size Array A	Bit Size Array B	Bit Size Array C	Bit Size Array D	Bit Size 70T3509M
Instruction (IR)	4	4	4	4	16
Bypass (BYR)	1	1	1	1	4
Identification (IDR)	32	32	32	32	128
Boundary Scan (BSR)	Note (3)	Note (3)	Note (3)	Note (3)	Note (3)

5682 tbl 17

System Interface Parameters

Instruction	Code	Description
EXTEST	0000000000000000	Forces contents of the boundary scan cells onto the device outputs[1]. Places the boundary scan register (BSR) between TDI and TDO.
BYPASS	1111111111111111	Places the bypass register (BYR) between TDI and TDO.
IDCODE	0010001000100010	Loads the ID register (IDR) with the vendor ID code and places the register between TDI and TDO.
HIGHZ	0100010001000100	Places the bypass register (BYR) between TDI and TDO. Forces all device output drivers except $\overline{INT}$x to a High-Z state.
CLAMP	0011001100110011	Uses BYR. Forces contents of the boundary scan cells onto the device outputs. Places the bypass register (BYR) between TDI and TDO.
SAMPLE/PRELOAD	0001000100010001	Places the boundary scan register (BSR) between TDI and TDO. SAMPLE allows data from device inputs[2] to be captured in the boundary scan cells and shifted serially through TDO. PRELOAD allows data to be input serially into the boundary scan cells via the TDI.
RESERVED	0101010101010101, 0111011101110111, 1000100010001000, 1001100110011001, 1010101010101010, 1011101110111011, 1100110011001100	Several combinations are reserved. Do not use codes other than those identified above.
PRIVATE	0110011001100110,1110111011101110, 1101110111011101	For internal use only.

5682 tbl 18

NOTES:
1. Device outputs = All device outputs except TDO.
2. Device inputs = All device inputs except TDI, TMS, and $\overline{TRST}$.
3. The Boundary Scan Descriptive Language (BSDL) file for this device is available on the IDT website (www.idt.com), or by contacting your local IDT sales representative.

Ordering Information

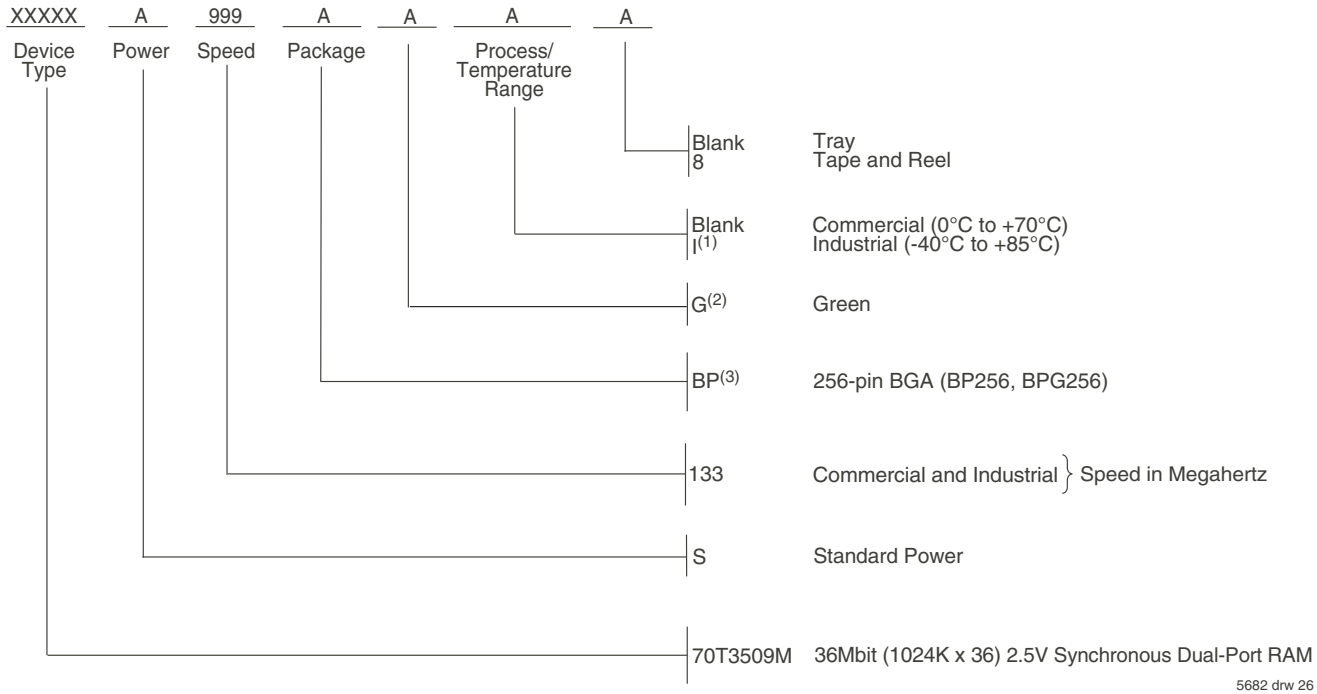

5682 drw 26

NOTES:

1. Contact your local sales office for Industrial temp range in other speeds, packages and powers.
2. Green parts available. For specific speeds, packages and powers contact your local sales office.
3. BP-256 package thickness is 1.76mm nominal. This is thicker than the BC-256 package (1.40mm nominal) used for the lower density IDT dual-port products.

Orderable Part Information

Speed (MHz)	Orderable Part ID	Pkg. Code	Pkg. Type	Temp. Grade
133	70T3509MS133BP	BP256	CABGA	C
	70T3509MS133BPI	BP256	CABGA	I
	70T3509MS133BPG	BPG256	CABGA	C
	70T3509MS133BPGI	BPG256	CABGA	I

Datasheet Document History

11/09/04:	Initial Public Release of Preliminary Datasheet
03/24/05:	Page 1 Added I-temp offering to features
	Page 6 Added I-temp information to the Recommended Operating Temperature and Supply Voltage table
	Page 8 Added I-temp values to the DC Electrical Characteristics table
	Page 10 Added I-temp to the heading of the AC Electrical Characteristics table
	Page 23 Added I-temp to ordering information
	Page 1 Added green availability to features
	Page 1 - 23 Removed Preliminary status
06/14/05:	Page 1 Added feature to highlight footprint compatibility
	Page 3 & 23 Added a footnote to highlight package thickness of BP-256 vs. BC-256
08/27/07:	Page 1 Functional Block Diagram changed to correct chip enable logic and added footnote 2 referencing Truth Table I
07/28/08:	Page 8 Corrected a typo in the DC Chars table
01/19/09:	Page 23 Removed "IDT" from orderable part number
07/15/14:	Page 23 Added Tape & Reel to Ordering Information
	Page 23 Ordering Information restored from 70T3719_99 to 70T3509M
02/14/18:	Product Discontinuation Notice - PDN# SP-17-02
	Last time buy expires June 15, 2018
07/09/19:	Page 3 & 23 Updated package code BP-256 to BP256 and BPG256
	Page 23 Added Orderable Part Information table
10/29/19:	Page 23 Corrected "ns" to "MHz" in the header of the Orderable Part Information table
02/28/22:	Page 1 - 24 Source file updated to reflect previous Corporate Marketing rebranding
	Page 2 Updated the package code
	Page 22 Corrected the Orderable Part Information table

IMPORTANT NOTICE AND DISCLAIMER

RENESAS ELECTRONICS CORPORATION AND ITS SUBSIDIARIES (“RENESAS”) PROVIDES TECHNICAL SPECIFICATIONS AND RELIABILITY DATA (INCLUDING DATASHEETS), DESIGN RESOURCES (INCLUDING REFERENCE DESIGNS), APPLICATION OR OTHER DESIGN ADVICE, WEB TOOLS, SAFETY INFORMATION, AND OTHER RESOURCES “AS IS” AND WITH ALL FAULTS, AND DISCLAIMS ALL WARRANTIES, EXPRESS OR IMPLIED, INCLUDING, WITHOUT LIMITATION, ANY IMPLIED WARRANTIES OF MERCHANTABILITY, FITNESS FOR A PARTICULAR PURPOSE, OR NON-INFRINGEMENT OF THIRD PARTY INTELLECTUAL PROPERTY RIGHTS.

These resources are intended for developers skilled in the art designing with Renesas products. You are solely responsible for (1) selecting the appropriate products for your application, (2) designing, validating, and testing your application, and (3) ensuring your application meets applicable standards, and any other safety, security, or other requirements. These resources are subject to change without notice. Renesas grants you permission to use these resources only for development of an application that uses Renesas products. Other reproduction or use of these resources is strictly prohibited. No license is granted to any other Renesas intellectual property or to any third party intellectual property. Renesas disclaims responsibility for, and you will fully indemnify Renesas and its representatives against, any claims, damages, costs, losses, or liabilities arising out of your use of these resources. Renesas' products are provided only subject to Renesas' Terms and Conditions of Sale or other applicable terms agreed to in writing. No use of any Renesas resources expands or otherwise alters any applicable warranties or warranty disclaimers for these products.

(Rev.1.0 Mar 2020)

Corporate Headquarters

TOYOSU FORESIA, 3-2-24 Toyosu,
Koto-ku, Tokyo 135-0061, Japan
www.renesas.com

Contact Information

For further information on a product, technology, the most up-to-date version of a document, or your nearest sales office, please visit:
www.renesas.com/contact/

Trademarks

Renesas and the Renesas logo are trademarks of Renesas Electronics Corporation. All trademarks and registered trademarks are the property of their respective owners.

© 2020 Renesas Electronics Corporation. All rights reserved.