HIGH-SPEED 2.5V 256/128K x 72 SYNCHRONOUS DUAL-PORT STATIC RAM WITH 3.3V OR 2.5V INTERFACE

70T3719/99M

Features:

- **True Dual-Port memory cells which allow simultaneous access of the same memory location**
- **High-speed data access**
  - *Commercial: 3.6ns (166MHz)*
    4.2ns (133MHz)(max.)
  - *Industrial: 4.2ns (133MHz) (max.)*
- **Selectable Pipelined or Flow-Through output mode**
- **Counter enable and repeat features**
- **Dual chip enables allow for depth expansion without additional logic**
- **Interrupt and Collision Detection Flags**
- **Full synchronous operation on both ports**
  - *6ns cycle time, 166MHz operation (23.9Gbps bandwidth)*
  - *Fast 3.6ns clock to data out*
  - *Self-timed write allows fast cycle time*
  - *1.7ns setup to clock and 0.5ns hold on all control, data, and address inputs @ 166MHz*
  - *Data input, address, byte enable and control registers*
- **Separate byte controls for multiplexed bus and bus matching compatibility**
- **Dual Cycle Deselect (DCD) for Pipelined Output Mode**
- **2.5V (±100mV) power supply for core**
- **LVTTL compatible, selectable 3.3V (±150mV) or 2.5V (±100mV) power supply for I/Os and control signals on each port**
- **Industrial temperature range (-40°C to +85°C) is available at 133MHz**
- **Available in a 324-pin Green Ball Grid Array (BGA)**
- **Includes JTAG Functionality**
- **Green parts available, see ordering information**

Functional Block Diagram

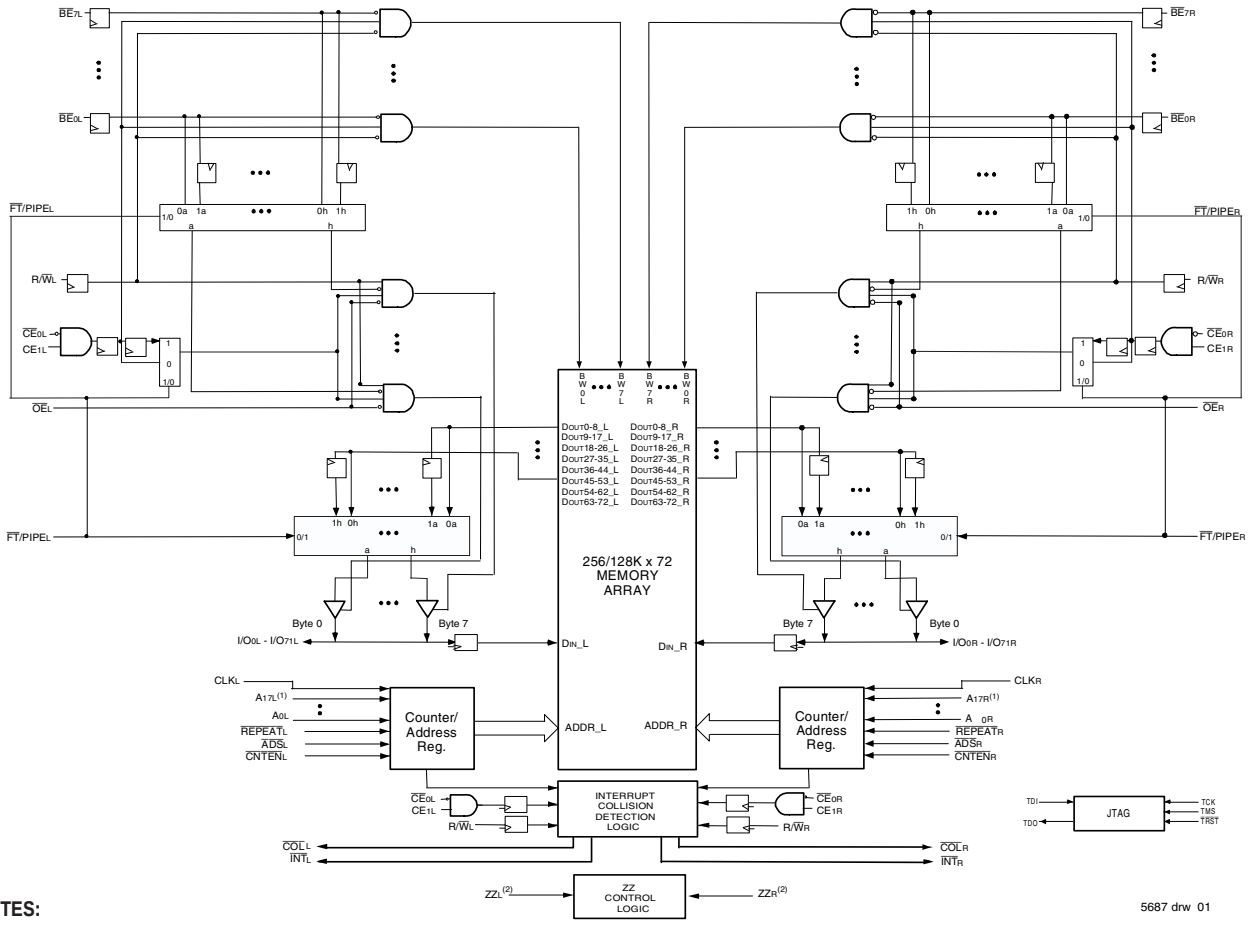

5687 drw 01

NOTES:

1. Address A_{17} is a NC for the IDT70T3799.
2. The sleep mode pin shuts off all dynamic inputs, except JTAG inputs, when asserted. All static inputs, i.e., PL/$\overline{FT}$x and OPTx and the sleep mode pins themselves (ZZx) are not affected during sleep mode.

NOVEMBER 2019

© 2019 Renesas Electronics Corporation

Description:

The IDT70T3719/99M is a high-speed 256K/128K x 72 bit synchronous Dual-Port RAM. The memory array utilizes Dual-Port memory cells to allow simultaneous access of any address from both ports. Registers on control, data, and address inputs provide minimal setup and hold times. The timing latitude provided by this approach allows systems to be designed with very short cycle times. With an input data register, the IDT70T3719/99M has been optimized for applications having unidirectional or bidirectional data flow in bursts. An automatic power down feature, controlled by $\overline{CE}_0$ and CE_1, permits the on-chip circuitry of each port to enter a very low standby power mode.

The 70T3719/99M can support an operating voltage of either 3.3V or 2.5V on one or both ports, controllable by the OPT pins. The power supply for the core of the device (V_{DD}) is at 2.5V.

© 2019 Renesas Electronics Corporation

Pin Configuration (2,3,4,5)

70T3719/99M
BBG324(6)

324-Pin BGA
Top View(7)

06/27/05	1	2	3	4	5	6	7	8	9	10	11	12	13	14	15	16	17	18	
A	I/O_{39R}	I/O_{38R}	I/O_{37R}	I/O_{36R}	$\overline{COL}_L$	A_{15L}	A_{12L}	A_{8L}	$\overline{BE}_{7L}$	$\overline{BE}_{2L}$	CE_{1L}	$\overline{ADS}_L$	A_{6L}	A_{1L}	I/O_{32R}	I/O_{33R}	I/O_{34R}	I/O_{35R}	A
B	I/O_{39L}	I/O_{38L}	I/O_{37L}	I/O_{36L}	TDO	A_{17L}(1)	A_{13L}	A_{10L}	$\overline{BE}_{6L}$	$\overline{BE}_{5L}$	$\overline{BE}_{1L}$	$\overline{OE}_L$	$\overline{REPEAT}_L$	A_{0L}	I/O_{32L}	I/O_{33L}	I/O_{34L}	I/O_{35L}	B
C	I/O_{40R}	I/O_{41R}	I/O_{42R}	I/O_{43R}	$\overline{INT}_L$	A_{16L}	A_{11L}	A_{7L}	$\overline{BE}_{0L}$	$\overline{CE}_{0L}$	$R/\overline{W}_L$	$\overline{CNTEN}_L$	A_{4L}	A_{3L}	I/O_{31R}	I/O_{30R}	I/O_{29R}	I/O_{28R}	C
D	I/O_{40L}	I/O_{41L}	I/O_{42L}	I/O_{43L}	TDI	NC	A_{14L}	A_{9L}	$\overline{BE}_{4L}$	$\overline{BE}_{3L}$	CLK_L	A_{5L}	A_{2L}	$\overline{ZZ}_L$	I/O_{31L}	I/O_{30L}	I/O_{29L}	I/O_{28L}	D
E	I/O_{47R}	I/O_{46R}	I/O_{45R}	I/O_{44R}	$PL/\overline{FT}_L$	V_{DD}	V_{DDQL}	V_{DDQR}	V_{DDQR}	V_{DDQL}	V_{DDQL}	V_{DDQR}	V_{DDQR}	OPT_L	I/O_{24R}	I/O_{25R}	I/O_{26R}	I/O_{27R}	E
F	I/O_{47L}	I/O_{46L}	I/O_{45L}	I/O_{44L}	V_{DD}	V_{DD}	V_{DDQL}	V_{SS}	V_{SS}	V_{SS}	V_{DD}	V_{DD}	V_{DD}	V_{DD}	I/O_{24L}	I/O_{25L}	I/O_{26L}	I/O_{27L}	F
G	I/O_{48R}	I/O_{49R}	I/O_{50R}	I/O_{51R}	V_{DDQR}	V_{DDQR}	V_{SS}	V_{SS}	V_{SS}	V_{SS}	V_{SS}	V_{SS}	V_{DDQR}	V_{DDQR}	I/O_{23R}	I/O_{22R}	I/O_{21R}	I/O_{20R}	G
H	I/O_{48L}	I/O_{49L}	I/O_{50L}	I/O_{51L}	V_{DDQL}	V_{DDQL}	V_{SS}	V_{SS}	V_{SS}	V_{SS}	V_{SS}	V_{SS}	V_{DDQL}	V_{DDQL}	I/O_{23L}	I/O_{22L}	I/O_{21L}	I/O_{20L}	H
J	I/O_{55R}	I/O_{54R}	I/O_{53R}	I/O_{52R}	V_{DDQR}	V_{SS}	V_{SS}	V_{SS}	V_{SS}	V_{SS}	V_{SS}	V_{SS}	V_{SS}	V_{DDQR}	I/O_{16R}	I/O_{17R}	I/O_{18R}	I/O_{19R}	J
K	I/O_{55L}	I/O_{54L}	I/O_{53L}	I/O_{52L}	V_{DDQR}	V_{SS}	V_{SS}	V_{SS}	V_{SS}	V_{SS}	V_{SS}	V_{SS}	V_{SS}	V_{DDQR}	I/O_{16L}	I/O_{17L}	I/O_{18L}	I/O_{19L}	K
L	I/O_{56R}	I/O_{57R}	I/O_{58R}	I/O_{59R}	V_{DDQL}	V_{SS}	V_{SS}	V_{SS}	V_{SS}	V_{SS}	V_{SS}	V_{SS}	V_{SS}	V_{DDQL}	I/O_{15R}	I/O_{14R}	I/O_{13R}	I/O_{12R}	L
M	I/O_{56L}	I/O_{57L}	I/O_{58L}	I/O_{59L}	V_{DDQL}	V_{DD}	V_{SS}	V_{SS}	V_{SS}	V_{SS}	V_{SS}	V_{SS}	V_{DDQL}	V_{DDQL}	I/O_{15L}	I/O_{14L}	I/O_{13L}	I/O_{12L}	M
N	I/O_{63R}	I/O_{62R}	I/O_{61R}	I/O_{60R}	V_{DDQR}	V_{DDQR}	V_{DDQL}	V_{DDQL}	V_{SS}	V_{SS}	V_{DD}	V_{DDQR}	V_{DDQR}	V_{DDQR}	I/O_{8R}	I/O_{9R}	I/O_{10R}	I/O_{11R}	N
P	I/O_{63L}	I/O_{62L}	I/O_{61L}	I/O_{60L}	$\overline{ZZ}_R$	TMS	V_{DD}	V_{DD}	V_{DD}	V_{DDQL}	V_{DDQL}	V_{DD}	V_{DD}	OPT_R	I/O_{8L}	I/O_{9L}	I/O_{10L}	I/O_{11L}	P
R	I/O_{64R}	I/O_{65R}	I/O_{66R}	I/O_{67R}	$\overline{COL}_R$	A_{17R}(1)	A_{12R}	A_{9R}	$\overline{BE}_{4R}$	$\overline{CE}_{0R}$	$\overline{OE}_R$	A_{6R}	A_{2R}	A_{1R}	I/O_{7R}	I/O_{6R}	I/O_{5R}	I/O_{4R}	R
T	I/O_{64L}	I/O_{65L}	I/O_{66L}	I/O_{67L}	$PL/\overline{FT}_R$	A_{16R}	A_{13R}	A_{7R}	$\overline{BE}_{7R}$	$\overline{BE}_{3R}$	CE_{1R}	$\overline{ADS}_R$	A_{4R}	A_{0R}	I/O_{7L}	I/O_{6L}	I/O_{5L}	I/O_{4L}	T
U	I/O_{71R}	I/O_{70R}	I/O_{69R}	I/O_{68R}	TCK	$\overline{INT}_R$	A_{14R}	A_{10R}	$\overline{BE}_{2R}$	$\overline{BE}_{6R}$	$\overline{BE}_{1R}$	$R/\overline{W}_R$	$\overline{REPEAT}_R$	A_{3R}	I/O_{0R}	I/O_{1R}	I/O_{2R}	I/O_{3R}	U
V	I/O_{71L}	I/O_{70L}	I/O_{69L}	I/O_{68L}	$\overline{TRST}$	NC	A_{15R}	A_{11R}	A_{8R}	$\overline{BE}_{5R}$	$\overline{BE}_{0R}$	CLK_R	$\overline{CNTEN}_R$	A_{5R}	I/O_{0L}	I/O_{1L}	I/O_{2L}	I/O_{3L}	V
	1	2	3	4	5	6	7	8	9	10	11	12	13	14	15	16	17	18	

5687 tbl 01

NOTES:
1. Pin is a NC for IDT70T3799.
2. All V_{DD} pins must be connected to 2.5V power supply.
3. All V_{DDQ} pins must be connected to appropriate power supply: 3.3V if OPT pin for that port is set to V_{DD} (2.5V), and 2.5V if OPT pin for that port is set to V_{SS} (0V).
4. All V_{SS} pins must be connected to ground supply.
5. Package body is approximately 19mm x 19mm x 1.76mm, with 1.0mm ball-pitch.
6. This package code is used to reference the package diagram.
7. This text does not indicate orientation of the actual part-marking.

© 2019 Renesas Electronics Corporation

Pin Names

Left Port	Right Port	Names
$\overline{CE}_{0L}$, CE_{1L}	$\overline{CE}_{0R}$, CE_{1R}	Chip Enables (Input)[6]
R/$\overline{W}_L$	R/$\overline{W}_R$	Read/Write Enable (Input)
$\overline{OE}_L$	$\overline{OE}_R$	Output Enable (Input)
A_{0L} - A_{17L}[5]	A_{0R} - A_{17R}[5]	Address (Input)
I/O_{0L} - I/O_{71L}	I/O_{0R} - I/O_{71R}	Data Input/Output
CLK_L	CLK_R	Clock (Input)
PL/$\overline{FT}_L$	PL/$\overline{FT}_R$	Pipeline/Flow-Through (Input)
$\overline{ADS}_L$	$\overline{ADS}_R$	Address Strobe Enable (Input)
$\overline{CNTEN}_L$	$\overline{CNTEN}_R$	Counter Enable (Input)
$\overline{REPEAT}_L$	$\overline{REPEAT}_R$	Counter Repeat[3]
$\overline{BE}_{0L}$ - $\overline{BE}_{7L}$	$\overline{BE}_{0R}$ - $\overline{BE}_{7R}$	Byte Enables (9-bit bytes) (Input)[6]
V_{DDQL}	V_{DDQR}	Power (I/O Bus) (3.3V or 2.5V)[1] (Input)
OPT_L	OPT_R	Option for selecting V_{DDQX}[1,2] (Input)
ZZ_L	ZZ_R	Sleep Mode pin[4] (Input)
V_{DD}		Power (2.5V)[1] (Input)
V_{SS}		Ground (0V) (Input)
TDI		Test Data Input
TDO		Test Data Output
TCK		Test Logic Clock (10MHz) (Input)
TMS		Test Mode Select (Input)
$\overline{TRST}$		Reset (Initialize TAP Controller) (Input)
$\overline{INT}_L$	$\overline{INT}_R$	Interrupt Flag (Output)
$\overline{COL}_L$	$\overline{COL}_R$	Collision Alert (Output)

5687 tbl 02

NOTES:

1. V_{DD}, OPT_X, and V_{DDQX} must be set to appropriate operating levels prior to applying inputs on the I/Os and controls for that port.
2. OPT_X selects the operating voltage levels for the I/Os and controls on that port. If OPT_X is set to V_{DD} (2.5V), then that port's I/Os and controls will operate at 3.3V levels and V_{DDQX} must be supplied at 3.3V. If OPT_X is set to V_{SS} (0V), then that port's I/Os and address controls will operate at 2.5V levels and V_{DDQX} must be supplied at 2.5V. The OPT pins are independent of one another—both ports can operate at 3.3V levels, both can operate at 2.5V levels, or either can operate at 3.3V with the other at 2.5V.
3. When $\overline{REPEAT}_X$ is asserted, the counter will reset to the last valid address loaded via $\overline{ADS}_X$.
4. The sleep mode pin shuts off all dynamic inputs, except JTAG inputs, when asserted. All static inputs, i.e., PL/$\overline{FT}_X$ and OPT_X and the sleep mode pins themselves (ZZ_X) are not affected during sleep mode. It is recommended that boundary scan not be operated during sleep mode.
5. Address A_{17X} is a NC for the IDT70T3799M.
6. Chip Enables and Byte Enables are double buffered when PL/$\overline{FT}$ = V_{IH}, i.e., the signals take two cycles to deselect.

© 2019 Renesas Electronics Corporation

Truth Table I—Read/Write and Enable Control (1,2,3,4,5)

$\overline{OE}$	CLK	$\overline{CE_0}$	CE_1	Byte Enables	R/$\overline{W}$	ZZ	I/O Operation[6]	MODE
X	↑	H	X	All $\overline{BE}$ = X	X	L	All Bytes= High-Z	Deselected: Power Down
X	↑	X	L	All $\overline{BE}$ = X	X	L	All Bytes = High-Z	Deselected: Power Down
X	↑	L	H	All $\overline{BE}$ = H	X	L	All Bytes = High-Z	All Bytes Deselected
X	↑	L	H	$\overline{BE}_n$ = L, All other $\overline{BE}$ = H	L	L	Byte$_n$ = D_{IN}, All other Bytes = High-Z	Write to Byte X Only
X	↑	L	H	$\overline{BE}_{4-7}$ = L, $\overline{BE}_{0-3}$ = H	L	L	Byte$_{4-7}$ = D_{IN}, Byte$_{0-3}$ = High-Z	Write to Lower Bytes Only
X	↑	L	H	$\overline{BE}_{4-7}$ = H, $\overline{BE}_{0-3}$ = L	L	L	Byte$_{4-7}$ = High-Z, Byte$_{0-3}$ = D_{IN}	Write to Upper Bytes Only
X	↑	L	H	$\overline{BE}_{0-7}$ = L	L	L	Byte$_{0-7}$ = D_{IN}	Write to All Bytes
L	↑	L	H	$\overline{BE}_n$ = L, All other $\overline{BE}$ = H	H	L	Byte$_n$ = D_{OUT}, All other Bytes = High-Z	Read Byte X Only
L	↑	L	H	$\overline{BE}_{4-7}$ = L, $\overline{BE}_{0-3}$ = H	H	L	Byte$_{4-7}$ = D_{OUT}, Byte$_{0-3}$ = High-Z	Read Lower Bytes Only
L	↑	L	H	$\overline{BE}_{4-7}$ = H, $\overline{BE}_{0-3}$ = L	H	L	Byte$_{4-7}$ = High-Z, Byte$_{0-3}$ = D_{OUT}	Read Upper Bytes Only
L	↑	L	H	All $\overline{BE}$ = L	H	L	All Bytes = D_{OUT}	Read All Bytes
H	X	X	X	All $\overline{BE}$ = X	X	L	All Bytes = High-Z	Outputs Disabled
X	X	X	X	All $\overline{BE}$ = X	X	H	All Bytes = High-Z	Sleep Mode

5687 tbl 03

NOTES:
1. "H" = V_{IH}, "L" = V_{IL}, "X" = Don't Care.
2. $\overline{ADS}$, CNTEN, $\overline{REPEAT}$ = X.
3. $\overline{OE}$ and ZZ are asynchronous input signals.
4. It is possible to read or write any combination of bytes during a given access. A few representative samples have been illustrated here.
5. For the examples shown here, $\overline{BE}$n may correspond to any of the eight byte enable signals.

Truth Table II—Address Counter Control (1,2)

Address	Previous Internal Address	Internal Address Used	CLK	$\overline{ADS}$[4]	$\overline{CNTEN}$	$\overline{REPEAT}$[4,6]	I/O[3]	MODE
An	X	An	↑	L	X	H	$D_{I/O}$(n)	External Address Used
X	An	An + 1	↑	H	L[5]	H	$D_{I/O}$(n+1)	Counter Enabled-Internal Address generation
X	An + 1	An + 1	↑	H	H	H	$D_{I/O}$(n+1)	Enabled Address Blocked-Counter disabled (An + 1 reused)
X	X	An	↑	X	X	L	$D_{I/O}$(n)	Counter Set to last valid $\overline{ADS}$ load

5687 tbl 04

NOTES:
1. "H" = V_{IH}, "L" = V_{IL}, "X" = Don't Care.
2. Read and write operations are controlled by the appropriate setting of R/$\overline{W}$, $\overline{CE}_0$, CE_1, $\overline{BE}$n and $\overline{OE}$.
3. Outputs configured in flow-through output mode: if outputs are in pipelined mode the data out will be delayed by one cycle.
4. $\overline{ADS}$ and $\overline{REPEAT}$ are independent of all other memory control signals including $\overline{CE}_0$, CE_1 and $\overline{BE}$n.
5. The address counter advances if $\overline{CNTEN}$ = V_{IL} on the rising edge of CLK, regardless of all other memory control signals including $\overline{CE}_0$, CE_1, $\overline{BE}$n.
6. When $\overline{REPEAT}$ is asserted, the counter will reset to the last valid address loaded via $\overline{ADS}$. This value is not set at power-up: a known location should be loaded via $\overline{ADS}$ during initialization if desired. Any subsequent $\overline{ADS}$ access during operations will update the $\overline{REPEAT}$ address location.

© 2019 Renesas Electronics Corporation

Recommended Operating Temperature and Supply Voltage (1)

Grade	Ambient Temperature	GND	V_{DD}
Commercial	0°C to +70°C	0V	2.5V ± 100mV
Industrial	-40°C to +85°C	0V	2.5V ± 100mV

5687 tbl 05

NOTES:
1. This is the parameter TA. This is the "instant on" case temperature.

Recommended DC Operating Conditions with V_{DDQ} at 2.5V

Symbol	Parameter	Min.	Typ.	Max.	Unit
V_{DD}	Core Supply Voltage	2.4	2.5	2.6	V
V_{DDQ}	I/O Supply Voltage(3)	2.4	2.5	2.6	V
V_{SS}	Ground	0	0	0	V
V_{IH}	Input High Volltage (Address, Control & Data I/O Inputs)(3)	1.7	—	V_{DDQ} + 100mV(2)	V
V_{IH}	Input High Voltage – JTAG	1.7	—	V_{DD} + 100mV(2)	V
V_{IH}	Input High Voltage - ZZ, OPT, PIPE/$\overline{FT}$	V_{DD} - 0.2V	—	V_{DD} + 100mV(2)	V
V_{IL}	Input Low Voltage	-0.3(1)	—	0.7	V
V_{IL}	Input Low Voltage - ZZ, OPT, PIPE/$\overline{FT}$	-0.3(1)	—	0.2	V

5687 tbl 06a

NOTES:
1. V_{IL} (min.) = -1.0V for pulse width less than t_{CYC}/2 or 5ns, whichever is less.
2. V_{IH} (max.) = V_{DDQ} + 1.0V for pulse width less than t_{CYC}/2 or 5ns, whichever is less.
3. To select operation at 2.5V levels on the I/Os and controls of a given port, the OPT pin for that port must be set to V_{ss}(0V), and V_{DDQX} for that port must be supplied as indicated above.

Recommended DC Operating Conditions with V_{DDQ} at 3.3V

Symbol	Parameter	Min.	Typ.	Max.	Unit
V_{DD}	Core Supply Voltage	2.4	2.5	2.6	V
V_{DDQ}	I/O Supply Voltage(3)	3.15	3.3	3.45	V
V_{SS}	Ground	0	0	0	V
V_{IH}	Input High Voltage (Address, Control &Data I/O Inputs)(3)	2.0	—	V_{DDQ} + 150mV(2)	V
V_{IH}	Input High Voltage – JTAG	1.7	—	V_{DD} + 100mV(2)	V
V_{IH}	Input High Voltage - ZZ, OPT, PIPE/$\overline{FT}$	V_{DD} - 0.2V	—	V_{DD} + 100mV(2)	V
V_{IL}	Input Low Voltage	-0.3(1)	—	0.8	V
V_{IL}	Input Low Voltage - ZZ, OPT, PIPE/$\overline{FT}$	-0.3(1)	—	0.2	V

5687 tbl 06b

NOTES:
1. V_{IL} (min.) = -1.0V for pulse width less than t_{CYC}/2, or 5ns, whichever is less.
2. V_{IH} (max.) = V_{DDQ} + 1.0V for pulse width less than t_{CYC}/2 or 5ns, whichever is less.
3. To select operation at 3.3V levels on the I/Os and controls of a given port, the OPT pin for that port must be set to V_{DD} (2.5V), and V_{DDQX} for that port must be supplied as indicated above.

© 2019 Renesas Electronics Corporation

Absolute Maximum Ratings (1)

Symbol	Rating	Commercial & Industrial	Unit
V_{TERM} (V_{DD})	V_{DD} Terminal Voltage with Respect to GND	-0.5 to 3.6	V
V_{TERM}(2) (V_{DDQ})	V_{DDQ} Terminal Voltage with Respect to GND	-0.3 to V_{DDQ} + 0.3	V
V_{TERM}(2) (INPUTS and I/O's)	Input and I/O Terminal Voltage with Respect to GND	-0.3 to V_{DDQ} + 0.3	V
T_{BIAS}(3)	Temperature Under Bias	-55 to +125	°C
T_{STG}	Storage Temperature	-65 to +150	°C
T_{JN}	Junction Temperature	+150	°C
I_{OUT}(For V_{DDQ} = 3.3V)	DC Output Current	50	mA
I_{OUT}(For V_{DDQ} = 2.5V)	DC Output Current	40	mA

5687 tbl 07

NOTES:
1. Stresses greater than those listed under ABSOLUTE MAXIMUM RATINGS may cause permanent damage to the device. This is a stress rating only and functional operation of the device at these or any other conditions above those indicated in the operational sections of this specification is not implied. Exposure to absolute maximum rating conditions for extended periods may affect reliability.
2. This is a steady-state DC parameter that applies after the power supply has reached its nominal operating value. Power sequencing is not necessary; however, the voltage on any Input or I/O pin cannot exceed V_{DDQ} during power supply ramp up.
3. Ambient Temperature under DC Bias. No AC Conditions. Chip Deselected.

Capacitance (1)

(T_A = +25°C, F = 1.0MHz)

Symbol	Parameter	Conditions(2)	Max.	Unit
C_{IN}	Input Capacitance	V_{IN} = 0V	15	pF
C_{OUT}(2)	Output Capacitance	V_{OUT} = 0V	10.5	pF

5687 tbl 08

NOTES:
1. These parameters are determined by device characterization, but are not production tested.
2. C_{OUT} also references $C_{I/O}$.

DC Electrical Characteristics Over the Operating Temperature and Supply Voltage Range (V_{DD} = 2.5V ± 100mV)

Symbol	Parameter	Test Conditions	70T3719/99M Min.	70T3719/99M Max.	Unit
$\|I_{LI}\|$	Input Leakage Current(1)	V_{DDQ} = Max., V_{IN} = 0V to V_{DDQ}	—	10	µA
$\|I_{LI}\|$	JTAG & ZZ Input Leakage Current(1,2)	V_{DD} = Max., V_{IN} = 0V to V_{DD}	—	±30	µA
$\|I_{LO}\|$	Output Leakage Current(1,3)	$\overline{CE}_0$ = V_{IH} or CE_1 = V_{IL}, V_{OUT} = 0V to V_{DDQ}	—	10	µA
V_{OL} (3.3V)	Output Low Voltage(1)	I_{OL} = +4mA, V_{DDQ} = Min.	—	0.4	V
V_{OH} (3.3V)	Output High Voltage(1)	I_{OH} = -4mA, V_{DDQ} = Min.	2.4	—	V
V_{OL} (2.5V)	Output Low Voltage(1)	I_{OL} = +2mA, V_{DDQ} = Min.	—	0.4	V
V_{OH} (2.5V)	Output High Voltage(1)	I_{OH} = -2mA, V_{DDQ} = Min.	2.0	—	V

5687 tbl 09

NOTES:
1. V_{DDQ} is selectable (3.3V/2.5V) via OPT pins. Refer to p.5 for details.
2. Applicable only for TMS, TDI and $\overline{TRST}$ inputs.
3. Outputs tested in tri-state mode.

© 2019 Renesas Electronics Corporation

DC Electrical Characteristics Over the Operating Temperature and Supply Voltage Range (3) (V_{DD} = 2.5V ± 100mV)

Symbol	Parameter	Test Condition	Version		70T3719/99M S166 Com'l Only		70T3719/99M S133 Com'l & Ind		Unit
					Typ.(4)	Max.	Typ.(4)	Max.	
I_{DD}	Dynamic Operating Current (Both Ports Active)	$\overline{CE}_L$ and $\overline{CE}_R$= V_{IL}, Outputs Disabled, f = f_{MAX}(1)	COM'L	S	640	900	520	740	mA
			IND	S	—	—	520	900	
I_{SB1}(6)	Standby Current (Both Ports - TTL Level Inputs)	$\overline{CE}_L$ = $\overline{CE}_R$ = V_{IH} f = f_{MAX}(1)	COM'L	S	350	460	280	380	mA
			IND	S	—	—	280	470	
I_{SB2}(6)	Standby Current (One Port - TTL Level Inputs)	$\overline{CE}_{"A"}$ = V_{IL} and $\overline{CE}_{"B"}$ = V_{IH}(5) Active Port Outputs Disabled, f=f_{MAX}(1)	COM'L	S	500	650	400	500	mA
			IND	S	—	—	400	620	
I_{SB3}	Full Standby Current (Both Ports - CMOS Level Inputs)	Both Ports $\overline{CE}_L$ and $\overline{CE}_R \geq V_{DDQ}$ - 0.2V, $V_{IN} \geq V_{DDQ}$ - 0.2V or $V_{IN} \leq$ 0.2V, f = 0(2)	COM'L	S	12	20	12	20	mA
			IND	S	—	—	12	25	
I_{SB4}(6)	Full Standby Current (One Port - CMOS Level Inputs)	$\overline{CE}_{"A"} \leq$ 0.2V and $\overline{CE}_{"B"} \geq V_{DDQ}$ - 0.2V(5) $V_{IN} \geq V_{DDQ}$ - 0.2V or $V_{IN} \leq$ 0.2V Active Port, Outputs Disabled, f = f_{MAX}(1)	COM'L	S	500	650	400	500	mA
			IND	S	—	—	400	620	
I_{ZZ}	Sleep Mode Current (Both Ports - TTL Level Inputs)	ZZ_L = ZZ_R = V_{IH} f=f_{MAX}(1)	COM'L	S	12	20	12	20	mA
			IND	S	—	—	12	25	

5687 tbl 10

NOTES:

1. At f = f_{MAX}, address and control lines (except Output Enable) are cycling at the maximum frequency clock cycle of 1/t_{CYC}, using "AC TEST CONDITIONS".
2. f = 0 means no address, clock, or control lines change. Applies only to input at CMOS level standby.
3. Port "A" may be either left or right port. Port "B" is the opposite from port "A".
4. V_{DD} = 2.5V, T_A = 25°C for Typ, and are not production tested. $I_{DD\,DC}$(f=0) = 30mA (Typ).
5. $\overline{CE}_X$ = V_{IL} means $\overline{CE}_{0X}$ = V_{IL} and CE_{1X} = V_{IH}
   $\overline{CE}_X$ = V_{IH} means $\overline{CE}_{0X}$ = V_{IH} or CE_{1X} = V_{IL}
   $\overline{CE}_X \leq$ 0.2V means $\overline{CE}_{0X} \leq$ 0.2V and $CE_{1X} \geq V_{DD}$ - 0.2V
   $\overline{CE}_X \geq V_{DD}$ - 0.2V means $\overline{CE}_{0X} \geq V_{DD}$ - 0.2V or CE_{1X} - 0.2V
   "X" represents "L" for left port or "R" for right port.
6. I_{SB1}, I_{SB2} and I_{SB4} will all reach full standby levels (I_{SB3}) on the appropriate port(s) if ZZ_L and/or ZZ_R = V_{IH}.

© 2019 Renesas Electronics Corporation

AC Test Conditions (V_{DDQ} - 3.3V/2.5V)

Input Pulse Levels (Address & Controls)	GND to 3.0V/GND to 2.4V
Input Pulse Levels (I/Os)	GND to 3.0V/GND to 2.4V
Input Rise/Fall Times	2ns
Input Timing Reference Levels	1.5V/1.25V
Output Reference Levels	1.5V/1.25V
Output Load	Figure 1

5687 tbl 11

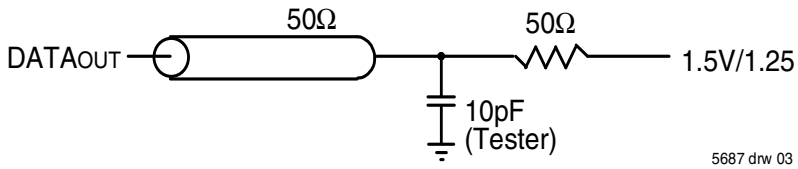

Figure 1. AC Output Test load.

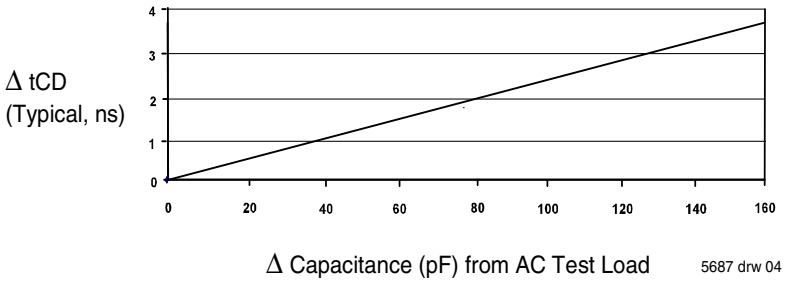

© 2019 Renesas Electronics Corporation

AC Electrical Characteristics Over the Operating Temperature Range (Read and Write Cycle Timing) [2,3] (V_{DD} = 2.5V ± 100mV, T_A = 0°C to +70°C)

		70T3719/99M S166 Com'l Only		70T3719/99M S133 Com'l & Ind		
Symbol	**Parameter**	**Min.**	**Max.**	**Min.**	**Max.**	**Unit**
t_{CYC1}	Clock Cycle Time (Flow-Through)[1]	20	—	25	—	ns
t_{CYC2}	Clock Cycle Time (Pipelined)[1]	6	—	7.5	—	ns
t_{CH1}	Clock High Time (Flow-Through)[1]	8	—	10	—	ns
t_{CL1}	Clock Low Time (Flow-Through)[1]	8	—	10	—	ns
t_{CH2}	Clock High Time (Pipelined)[2]	2.4	—	3	—	ns
t_{CL2}	Clock Low Time (Pipelined)[1]	2.4	—	3	—	ns
t_{SA}	Address Setup Time	1.7	—	1.8	—	ns
t_{HA}	Address Hold Time	0.5	—	0.5	—	ns
t_{SC}	Chip Enable Setup Time	1.7	—	1.8	—	ns
t_{HC}	Chip Enable Hold Time	0.5	—	0.5	—	ns
t_{SB}	Byte Enable Setup Time	1.7	—	1.8	—	ns
t_{HB}	Byte Enable Hold Time	0.5	—	0.5	—	ns
t_{SW}	R/W Setup Time	1.7	—	1.8	—	ns
t_{HW}	R/W Hold Time	0.5	—	0.5	—	ns
t_{SD}	Input Data Setup Time	1.7	—	1.8	—	ns
t_{HD}	Input Data Hold Time	0.5	—	0.5	—	ns
t_{SAD}	$\overline{ADS}$ Setup Time	1.7	—	1.8	—	ns
t_{HAD}	$\overline{ADS}$ Hold Time	0.5	—	0.5	—	ns
t_{SCN}	$\overline{CNTEN}$ Setup Time	1.7	—	1.8	—	ns
t_{HCN}	$\overline{CNTEN}$ Hold Time	0.5	—	0.5	—	ns
t_{SRPT}	$\overline{REPEAT}$ Setup Time	1.7	—	1.8	—	ns
t_{HRPT}	$\overline{REPEAT}$ Hold Time	0.5	—	0.5	—	ns
t_{OE}	Output Enable to Data Valid	—	4.4	—	4.6	ns
t_{OLZ}[4]	Output Enable to Output Low-Z	1	—	1	—	ns
t_{OHZ}[4]	Output Enable to Output High-Z	1	3.6	1	4.2	ns
t_{CD1}	Clock to Data Valid (Flow-Through)[1]	—	12	—	15	ns
t_{CD2}	Clock to Data Valid (Pipelined)[1]	—	3.6	—	4.2	ns
t_{DC}	Data Output Hold After Clock High	1	—	1	—	ns
t_{CKHZ}[4]	Clock High to Output High-Z	1	3.6	1	4.2	ns
t_{CKLZ}[4]	Clock High to Output Low-Z	1	—	1	—	ns
t_{INS}	Interrupt Flag Set Time	—	7	—	7	ns
t_{INR}	Interrupt Flag Reset Time	—	7	—	7	ns
t_{COLS}	Collision Flag Set Time	—	3.6	—	4.2	ns
t_{COLR}	Collision Flag Reset Time	—	3.6	—	4.2	ns
t_{ZZSC}	Sleep Mode Set Cycles	2	—	2	—	cycles
t_{ZZRC}	Sleep Mode Recovery Cycles	3	—	3	—	cycles
Port-to-Port Delay						
t_{CO}	Clock-to-Clock Offset	5	—	6	—	ns
t_{OFS}	Clock-to-Clock Offset for Collision Detection	Please refer to collision Detection Timing Table on Page 19.				

5687 tbl 12

NOTES:

1. The Pipelined output parameters (t_{CYC2}, t_{CD2}) apply to either or both left and right ports when $\overline{FT}$/PIPEX = V_{DD} (2.5V). Flow-through parameters (t_{CYC1}, t_{CD1}) apply when $\overline{FT}$/PIPE = V_{SS} (0V) for that port.
2. All input signals are synchronous with respect to the clock except for the asynchronous Output Enable ($\overline{OE}$), $\overline{FT}$/PIPE and OPT. $\overline{FT}$/PIPE and OPT should be treated as DC signals, i.e. steady state during operation.
3. These values are valid for either level of V_{DDQ} (3.3V/2.5V). See page 6 for details on selecting the desired operating voltage levels for each port.
4. Guaranteed by design (not production tested).

© 2019 Renesas Electronics Corporation

Timing Waveform of Read Cycle for Pipelined Operation ($\overline{FT}$/PIPE'X' = V_{IH})(1,2)

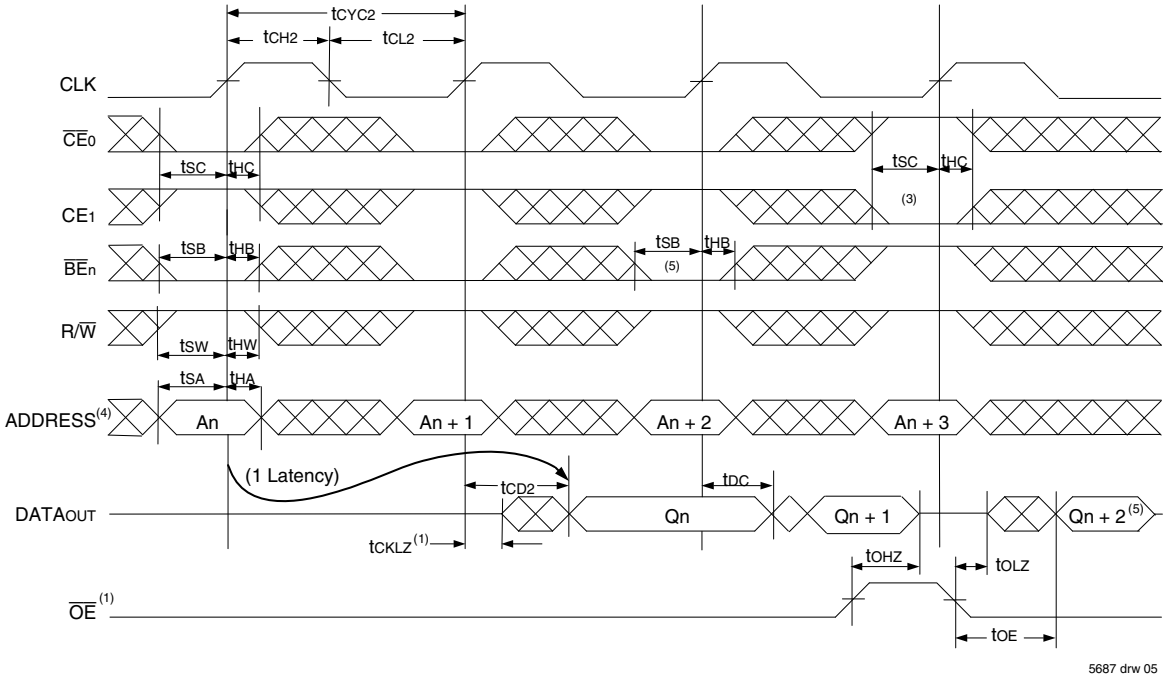

Timing Waveform of Read Cycle for Flow-through Output ($\overline{FT}$/PIPE"X" = V_{IL})(1,2,6)

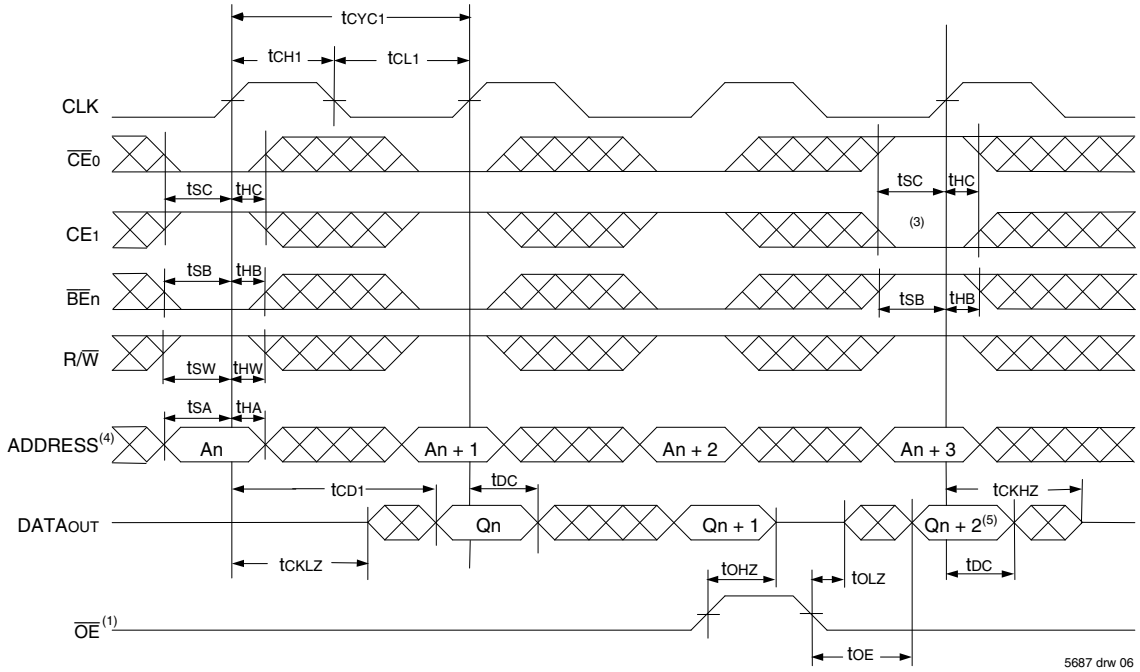

NOTES:

1. $\overline{OE}$ is asynchronously controlled; all other inputs depicted in the above waveforms are synchronous to the rising clock edge.
2. $\overline{ADS}$ = V_{IL}, $\overline{CNTEN}$ and $\overline{REPEAT}$ = V_{IH}.
3. The output is disabled (High-Impedance state) by $\overline{CE}_0$ = V_{IH}, CE_1 = V_{IL}, $\overline{BE}_n$ = V_{IH} following the next rising edge of the clock. Refer to Truth Table 1.
4. Addresses do not have to be accessed sequentially since $\overline{ADS}$ = V_{IL} constantly loads the address on the rising edge of the CLK; numbers are for reference use only.
5. If $\overline{BE}_n$ was HIGH, then the appropriate Byte of $DATA_{OUT}$ for Qn + 2 would be disabled (High-Impedance state).
6. "x" denotes Left or Right port. The diagram is with respect to that port.

© 2019 Renesas Electronics Corporation

Timing Waveform of a Multi-Device Pipelined Read (1,2)

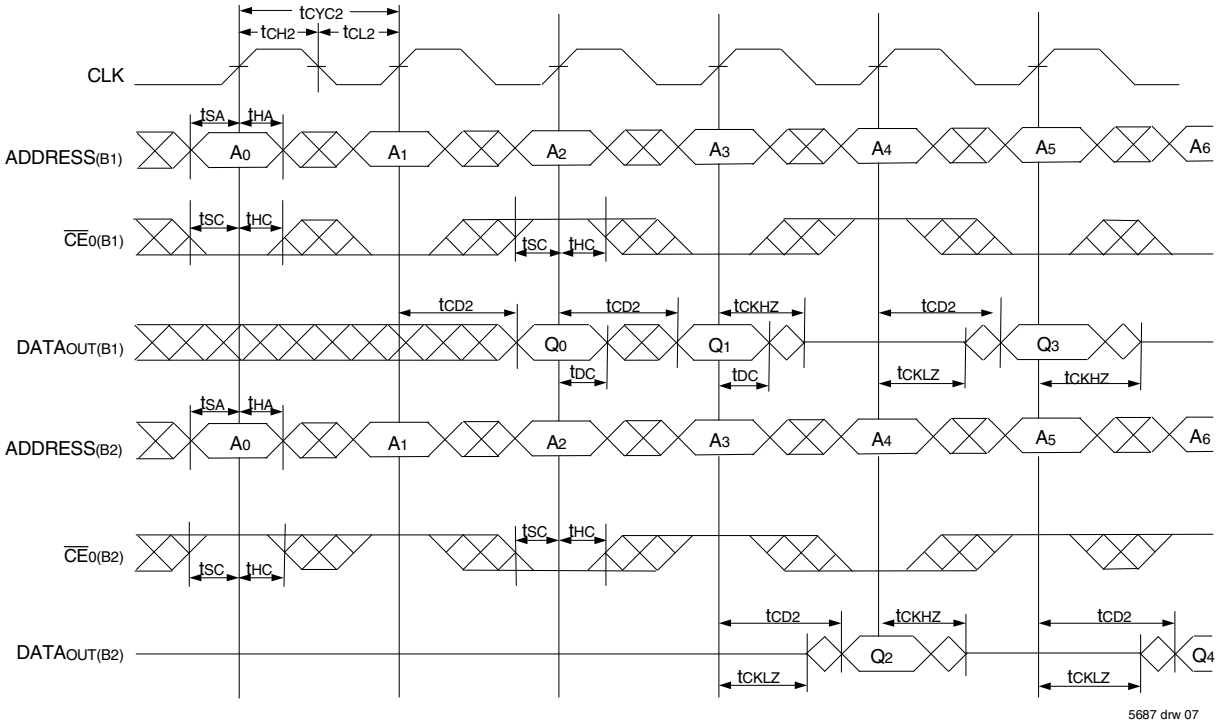

Timing Waveform of a Multi-Device Flow-Through Read (1,2)

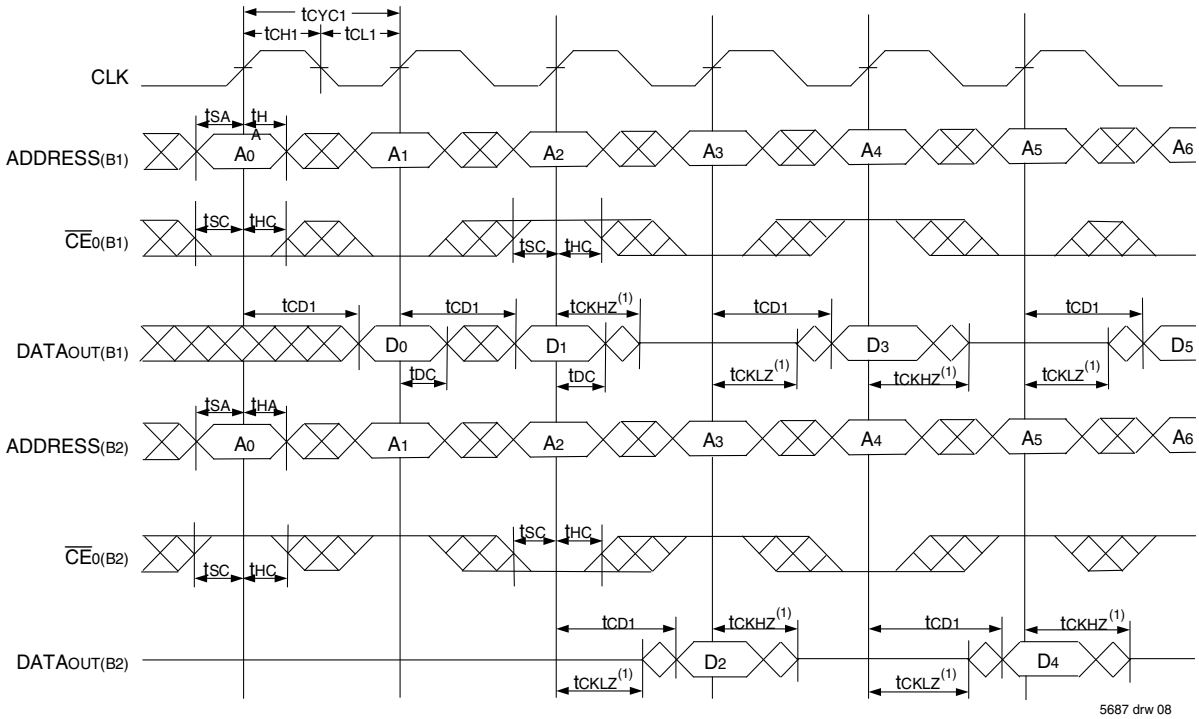

NOTES:

1. B1 Represents Device #1; B2 Represents Device #2. Each Device consists of one IDT70T3719/99M for this waveform, and are setup for depth expansion in this example. ADDRESS(B1) = ADDRESS(B2) in this situation.
2. $\overline{BE}_n$, $\overline{OE}$, and $\overline{ADS}$ = V_{IL}; $CE_{1(B1)}$, $CE_{1(B2)}$, R/$\overline{W}$, $\overline{CNTEN}$, and $\overline{REPEAT}$ = V_{IH}.

© 2019 Renesas Electronics Corporation

Timing Waveform of Left Port Write to Pipelined Right Port Read (1,2,4)

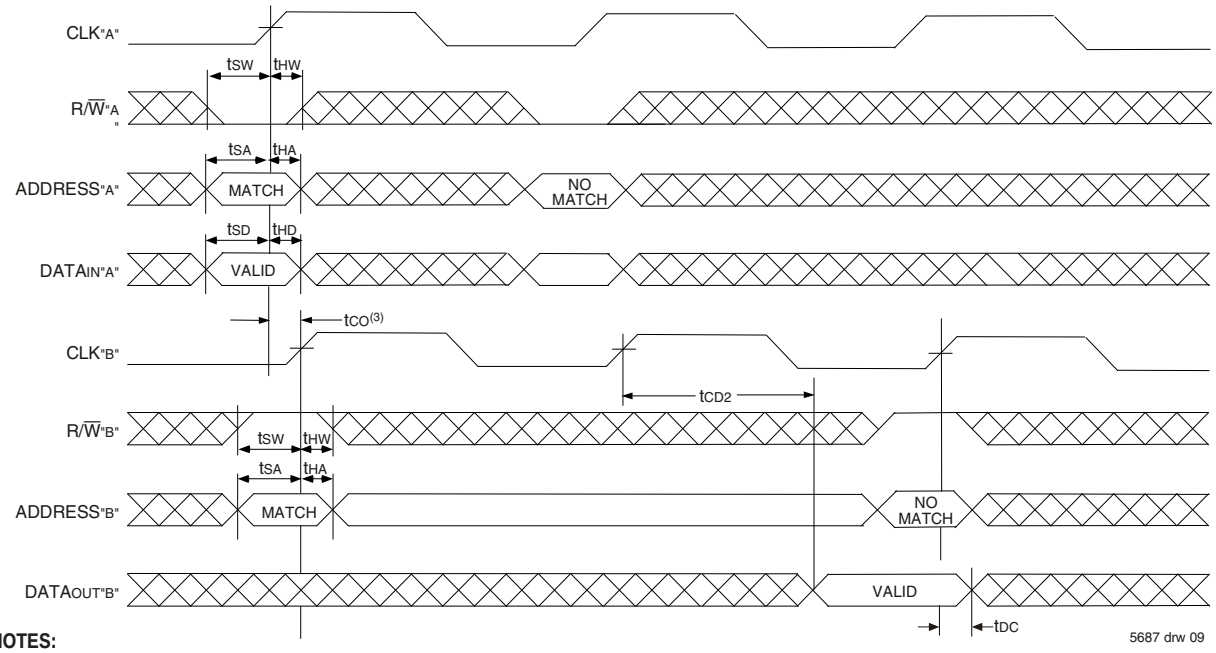

NOTES:

1. $\overline{CE}_0$, $\overline{BE}_n$, and $\overline{ADS}$ = V_{IL}; CE_1, $\overline{CNTEN}$, and $\overline{REPEAT}$ = V_{IH}.
2. $\overline{OE}$ = V_{IL} for Port "B", which is being read from. $\overline{OE}$ = V_{IH} for Port "A", which is being written to.
3. If $t_{CO} \leq$ minimum specified, then data from Port "B" read is not valid until following Port "B" clock cycle (ie, time from write to valid read on opposite port will be t_{CO} + 2 t_{CYC2} + t_{CD2}). If t_{CO} > minimum, then data from Port "B" read is available on first Port "B" clock cycle (ie, time from write to valid read on opposite port will be t_{CO} + t_{CYC2} + t_{CD2}).
4. All timing is the same for Left and Right ports. Port "A" may be either Left or Right port. Port "B" is the opposite of Port "A"

Timing Waveform with Port-to-Port Flow-Through Read (1,2,4)

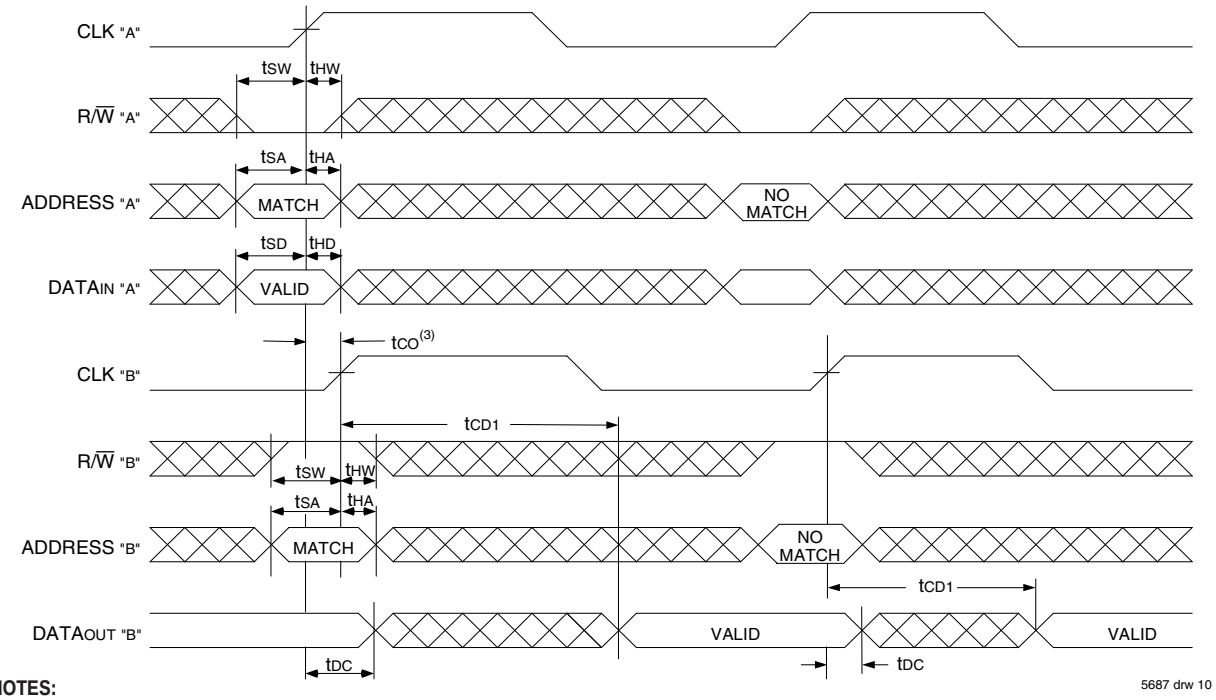

NOTES:

1. $\overline{CE}_0$, $\overline{BE}_n$, and $\overline{ADS}$ = V_{IL}; CE_1, $\overline{CNTEN}$, and $\overline{REPEAT}$ = V_{IH}.
2. $\overline{OE}$ = V_{IL} for the Right Port, which is being read from. $\overline{OE}$ = V_{IH} for the Left Port, which is being written to.
3. If $t_{CO} \leq$ minimum specified, then data from Port "B" read is not valid until following Port "B" clock cycle (i.e., time from write to valid read on opposite port will be t_{CO} + t_{CYC} + t_{CD1}). If t_{CO} > minimum, then data from Port "B" read is available on first Port "B" clock cycle (i.e., time from write to valid read on opposite port will be t_{CO} + t_{CD1}).
4. All timing is the same for both left and right ports. Port "A" may be either left or right port. Port "B" is the opposite of Port "A".

© 2019 Renesas Electronics Corporation

Timing Waveform of Pipelined Read-to-Write-to-Read ($\overline{OE}$ = VIL)(2)

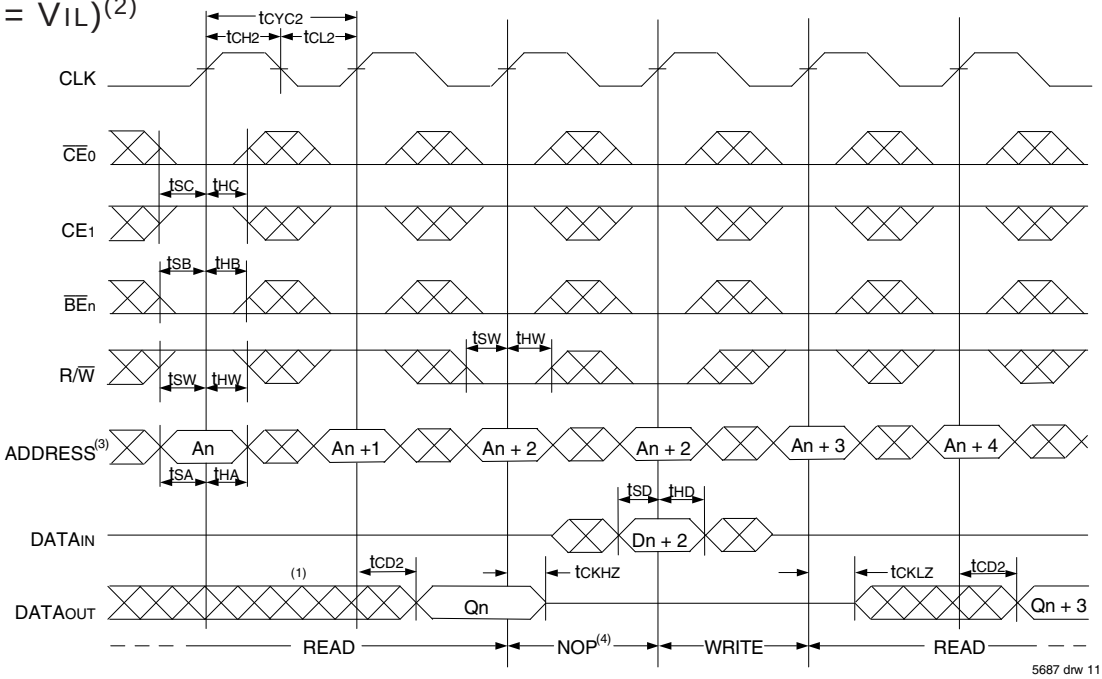

NOTES:

1. Output state (High, Low, or High-impedance) is determined by the previous cycle control signals.
2. $\overline{CE_0}$, $\overline{BE_n}$, and $\overline{ADS}$ = VIL; CE1, $\overline{CNTEN}$, and $\overline{REPEAT}$ = VIH. "NOP" is "No Operation".
3. Addresses do not have to be accessed sequentially since $\overline{ADS}$ = VIL constantly loads the address on the rising edge of the CLK; numbers are for reference use only.
4. "NOP" is "No Operation." Data in memory at the selected address may be corrupted and should be rewritten to guarantee data integrity.

Timing Waveform of Pipelined Read-to-Write-to-Read ($\overline{OE}$ Controlled) (2)

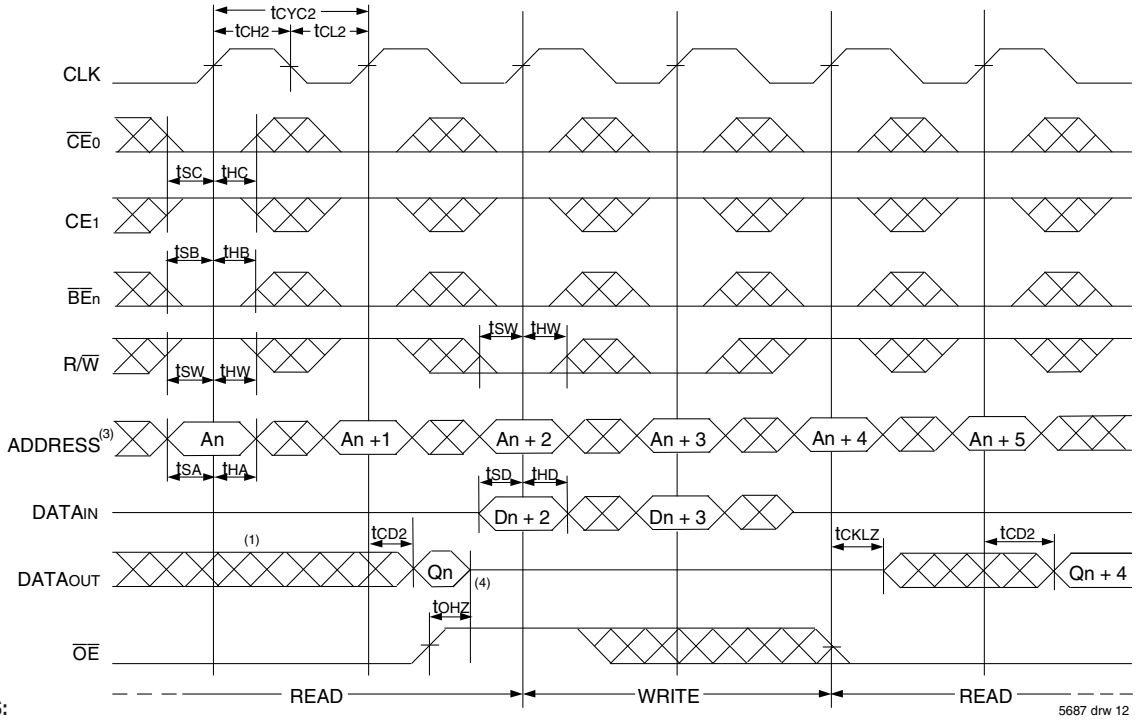

NOTES:

1. Output state (High, Low, or High-impedance) is determined by the previous cycle control signals.
2. $\overline{CE_0}$, $\overline{BE_n}$, and $\overline{ADS}$ = VIL; CE1, $\overline{CNTEN}$, and $\overline{REPEAT}$ = VIH.
3. Addresses do not have to be accessed sequentially since $\overline{ADS}$ = VIL constantly loads the address on the rising edge of the CLK; numbers are for reference use only.
4. This timing does not meet requirements for fastest speed grade. This waveform indicates how logically it could be done if timing so allows.

© 2019 Renesas Electronics Corporation

Timing Waveform of Flow-Through Read-to-Write-to-Read ($\overline{OE}$ = VIL)(2)

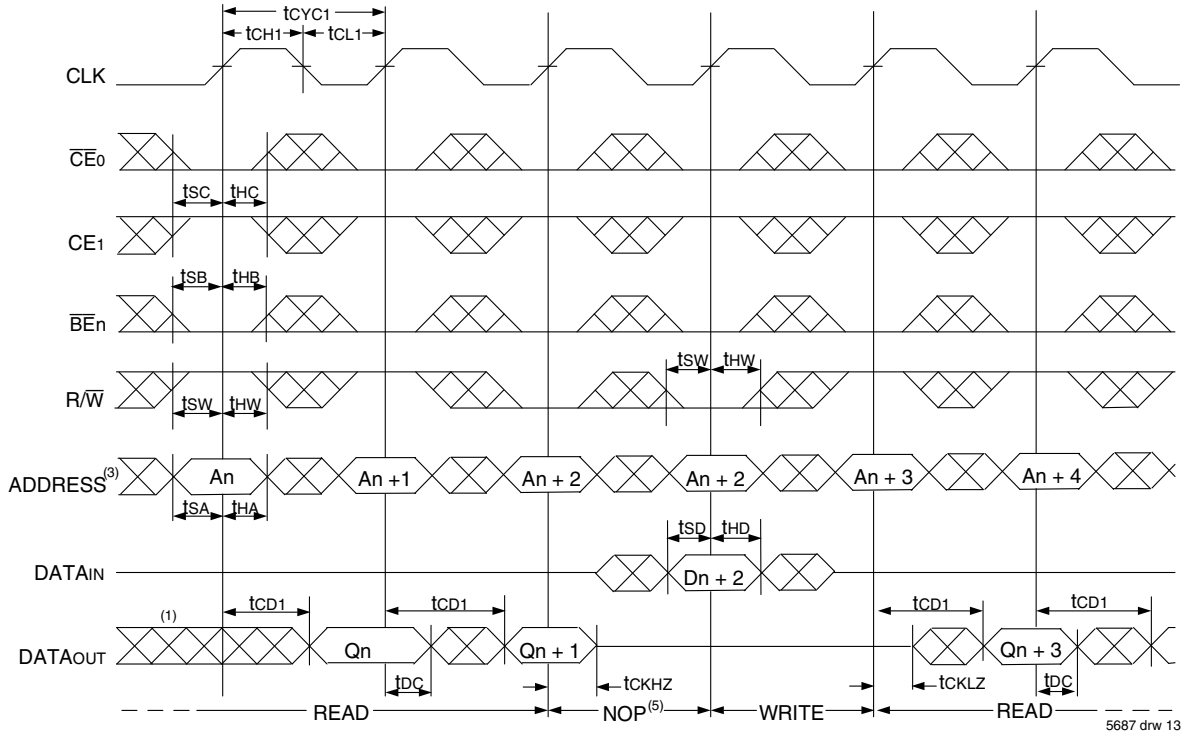

Timing Waveform of Flow-Through Read-to-Write-to-Read ($\overline{OE}$ Controlled)(2)

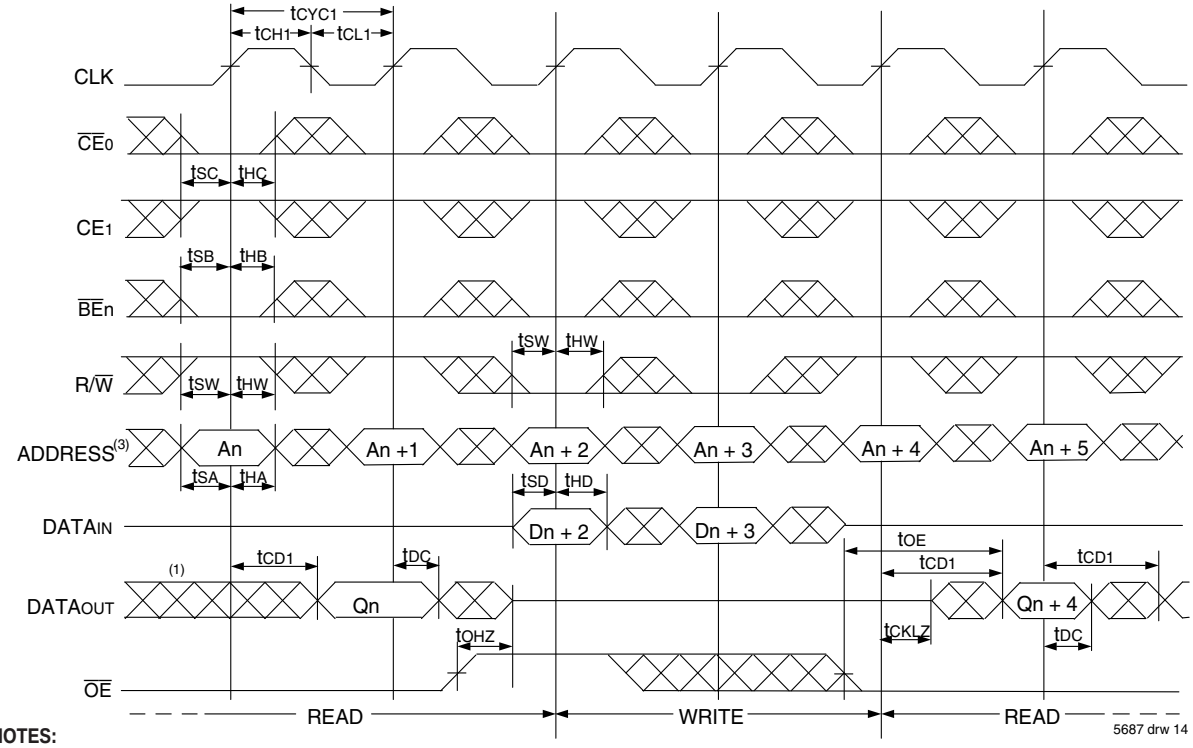

NOTES:

1. Output state (High, Low, or High-impedance) is determined by the previous cycle control signals.
2. $\overline{CE}_0$, $\overline{BE}$n, and $\overline{ADS}$ = VIL; CE1, $\overline{CNTEN}$, and $\overline{REPEAT}$ = VIH.
3. Addresses do not have to be accessed sequentially since $\overline{ADS}$ = VIL constantly loads the address on the rising edge of the CLK; numbers are for reference use only.
4. "NOP" is "No Operation." Data in memory at the selected address may be corrupted and should be rewritten to guarantee data integrity.

© 2019 Renesas Electronics Corporation

Timing Waveform of Pipelined Read with Address Counter Advance (1)

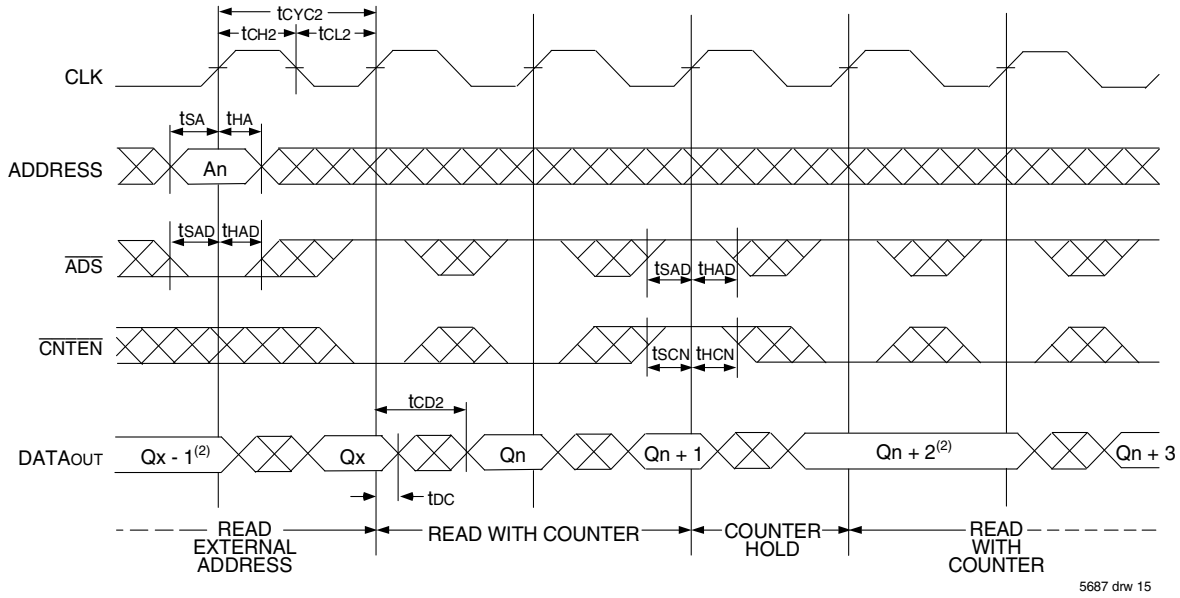

Timing Waveform of Flow-Through Read with Address Counter Advance (1)

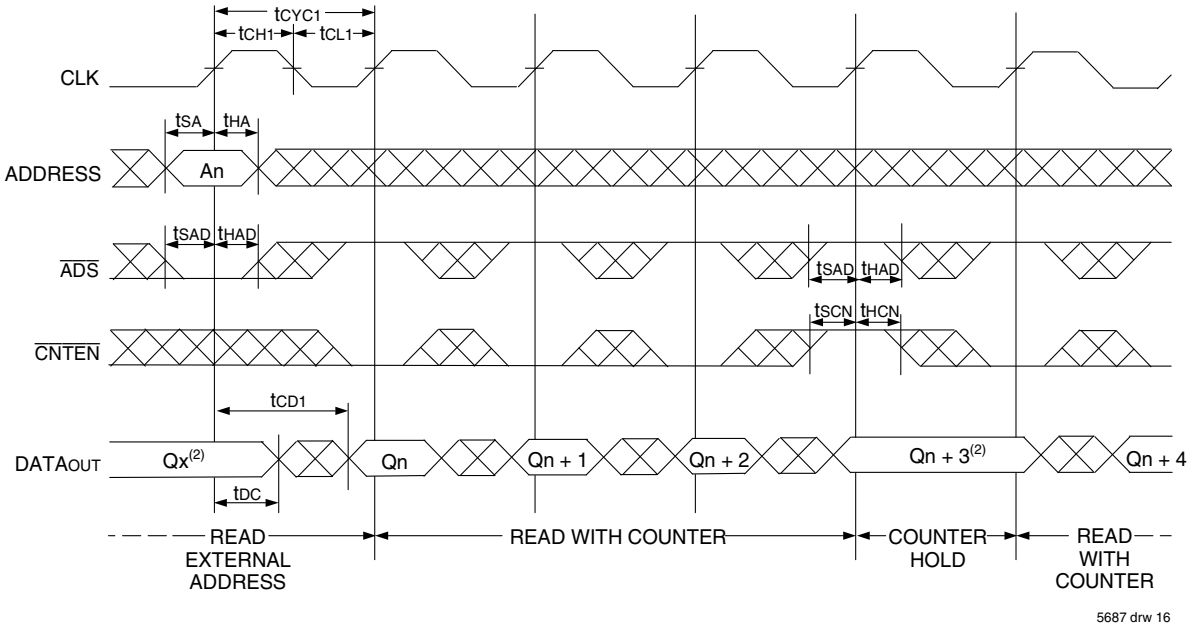

NOTES:

1. $\overline{CE_0}$, $\overline{OE}$, $\overline{BE}n$ = V_{IL}; CE_1, R/$\overline{W}$, and $\overline{REPEAT}$ = V_{IH}.
2. If there is no address change via $\overline{ADS}$ = V_{IL} (loading a new address) or $\overline{CNTEN}$ = V_{IL} (advancing the address), i.e. $\overline{ADS}$ = V_{IH} and $\overline{CNTEN}$ = V_{IH}, then the data output remains constant for subsequent clocks.

© 2019 Renesas Electronics Corporation

Timing Waveform of Write with Address Counter Advance (Flow-through or Pipelined Inputs) (1)

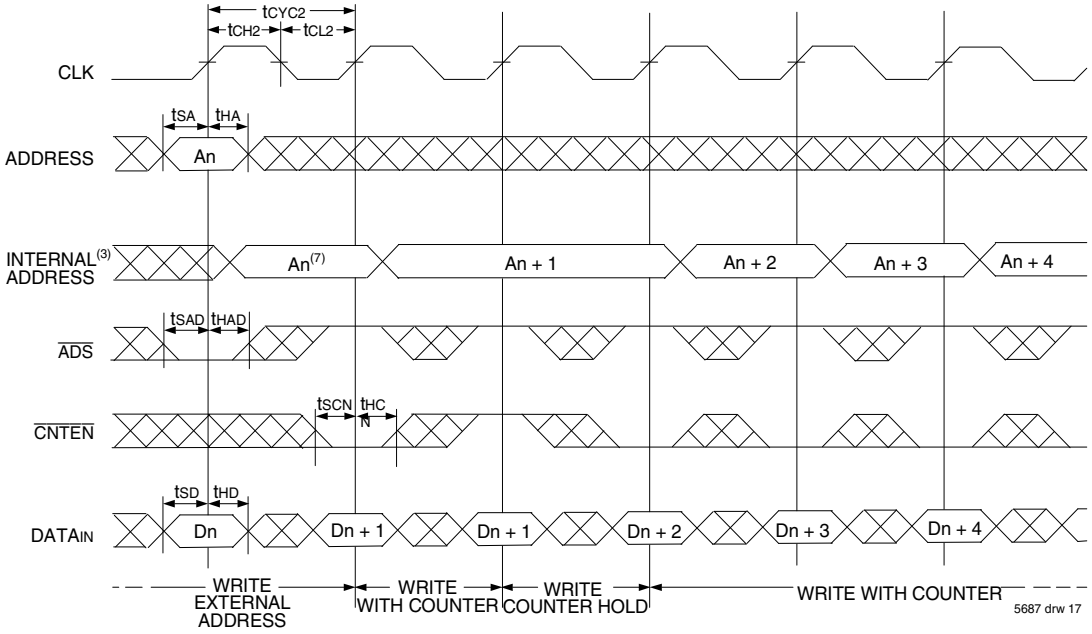

Timing Waveform of Counter Repeat (2,6)

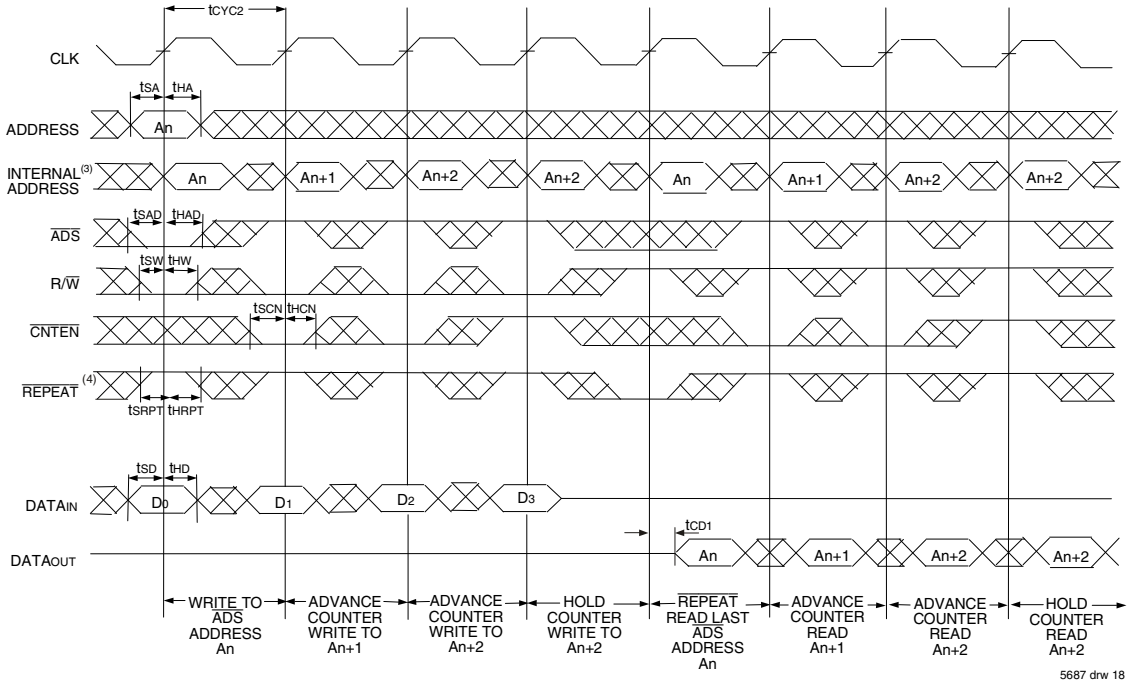

NOTES:

1. $\overline{CE_0}$, $\overline{BE_n}$, and R/$\overline{W}$ = V_{IL}; CE_1 and $\overline{REPEAT}$ = V_{IH}.
2. $\overline{CE_0}$, $\overline{BE_n}$ = V_{IL}; CE_1 = V_{IH}.
3. The "Internal Address" is equal to the "External Address" when $\overline{ADS}$ = V_{IL} and equals the counter output when $\overline{ADS}$ = V_{IH}.
4. No dead cycle exists during $\overline{REPEAT}$ operation. A READ or WRITE cycle may be coincidental with the counter $\overline{REPEAT}$ cycle: Address loaded by last valid $\overline{ADS}$ load will be accessed. For more information on $\overline{REPEAT}$ function refer to Truth Table II.
5. $\overline{CNTEN}$ = V_{IL} advances Internal Address from 'An' to 'An +1'. The transition shown indicates the time required for the counter to advance. The 'An +1'Address is written to during this cycle.
6. For Pipelined Mode user should add 1 cycle latency for outputs as per timing waveform of read cycle for pipelined operations.

© 2019 Renesas Electronics Corporation

Waveform of Interrupt Timing (2)

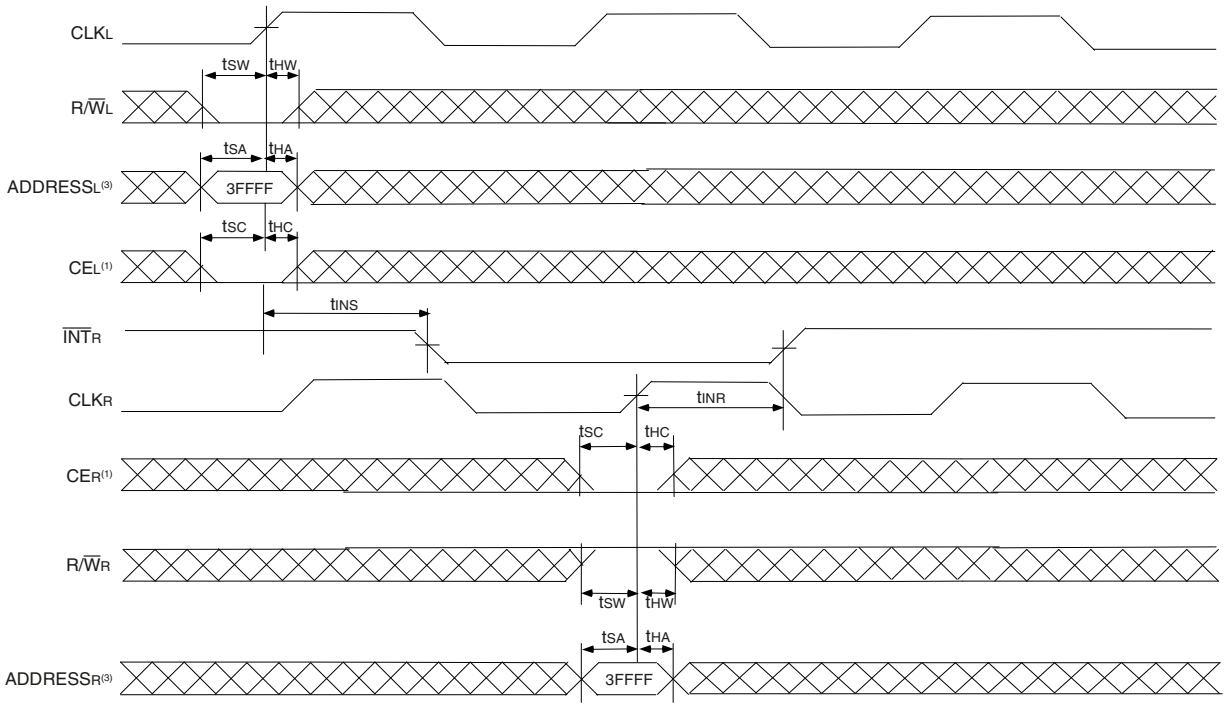

5687 drw 19

NOTES:
1. $\overline{CE}_0$ = V_{IL} and CE_1 = V_{IH}
2. All timing is the same for Left and Right ports.
3. Address is for internal register, not the external bus, i.e., address needs to be qualified by one of the Address counter control signals.

Truth Table III — Interrupt Flag (1)

Left Port						Right Port				
CLK_L	$R/\overline{W}_L$	$\overline{CE}_L$	A_{17L}-A_{0L}(3,4)	$\overline{INT}_L$	CLK_R	$R/\overline{W}_R$(2)	$\overline{CE}_R$(2)	A_{17R}-A_{0R}(3,4)	$\overline{INT}_R$	Function
↑	L	L	3FFFF	X	↑	X	X	X	L	Set Right $\overline{INT}_R$ Flag
↑	X	X	X	X	↑	X	L	3FFFF	H	Reset Right $\overline{INT}_R$ Flag
↑	X	X	X	L	↑	L	L	3FFFE	X	Set Left $\overline{INT}_L$ Flag
↑	H	L	3FFFE	H	↑	X	X	X	X	Reset Left $\overline{INT}_L$ Flag

5687 tbl 13

NOTES:
1. $\overline{INT}_L$ and $\overline{INT}_R$ must be initialized at power-up by Resetting the flags.
2. $\overline{CE}_0$ = V_{IL} and CE_1 = V_{IH}. $R/\overline{W}$ and CE are synchronous with respect to the clock and need valid set-up and hold times.
3. A17X is a NC for IDT70T3799, therefore Interrupt Addresses are 1FFFF and 1FFFE.
4. Address is for internal register, not the external bus, i.e., address needs to be qualified by one of the Address counter control signals.

© 2019 Renesas Electronics Corporation

Waveform of Collision Timing(1,2)
Both Ports Writing with Left Port Clock Leading

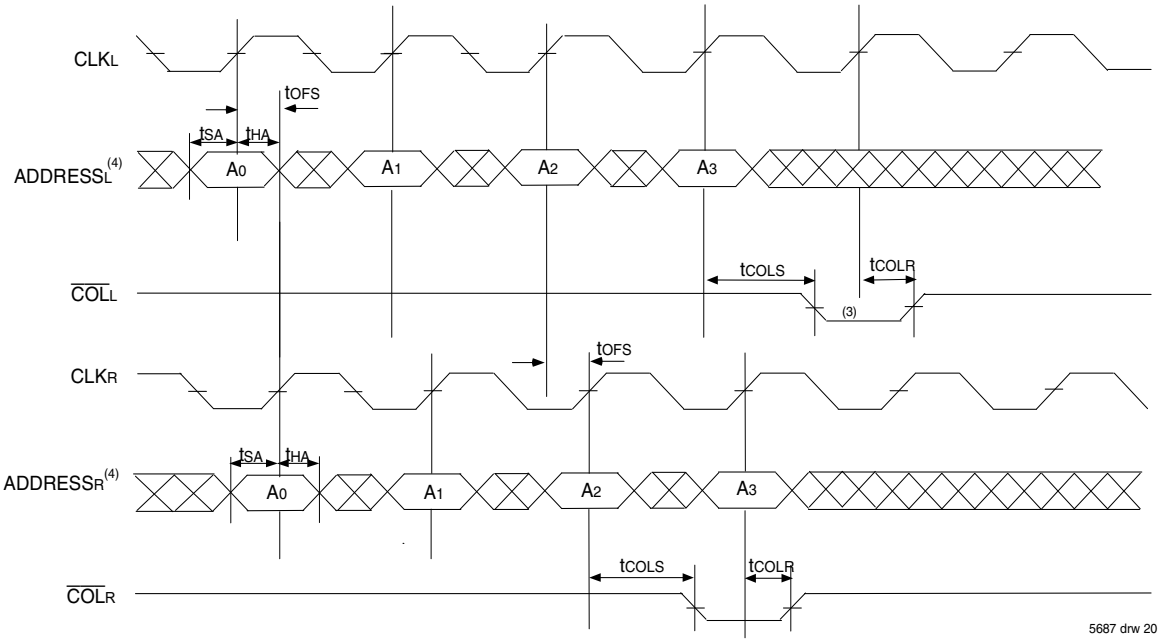

NOTES:
1. $\overline{CE}_0 = V_{IL}$, $CE_1 = V_{IH}$.
2. For reading port, $\overline{OE}$ is a Don't care on the Collision Detection Logic. Please refer to Truth Table IV for specific cases.
3. Leading Port Output flag might output $3t_{CYC2} + t_{COLS}$ after Address match.
4. Address is for internal register, not the external bus, i.e., address needs to be qualified by one of the Address counter control signals.

Collision Detection Timing(3,4)

Cycle Time	t_{OFS} (ns)	
	Region 1 (ns) (1)	Region 2 (ns) (2)
5ns	0 - 2.8	2.81 - 4.6
6ns	0 - 3.8	3.81 - 5.6
7.5ns	0 - 5.3	5.31 - 7.1

56876 tbl 14

NOTES:
1. Region 1
   Both ports show collision after 2nd cycle for Addresses 0, 2, 4 etc.
2. Region 2
   Leading port shows collision after 3rd cycle for addresses 0, 3, 6, etc. while trailing port shows collision after 2nd cycle for addresses 0, 2, 4 etc.
3. All the production units are tested to midpoint of each region.
4. These ranges are based on characterization of a typical device.

Truth Table IV — Collision Detection Flag

Left Port					Right Port					
CLK_L	$R/\overline{W}_L$	$\overline{CE}_L$	A_{17L}-A_{0L}(2)	$\overline{COL}_L$	CLK_R	$R/\overline{W}_R$(1)	$\overline{CE}_R$(1)	A_{17R}-A_{0R}(2)	$\overline{COL}_R$	Function
↑	H	L	MATCH	H	↑	H	L	MATCH	H	Both ports reading. Not a valid collision. No flag output on either port
↑	H	L	MATCH	L	↑	L	L	MATCH	H	Left port reading, Right port writing. Valid collision, flag output on Left port.
↑	L	L	MATCH	H	↑	H	L	MATCH	L	Right port reading, Left port writing. Valid collision, flag output on Right port.
↑	L	L	MATCH	L	↑	L	L	MATCH	L	Both ports writing. Valid collision. Flag output on both ports.

5687 tbl 15

NOTES:
1. $\overline{CE}_0 = V_{IL}$ and $CE_1 = V_{IH}$. $R/\overline{W}$ and CE are synchronous with respect to the clock and need valid set-up and hold times.
2. Address is for internal register, not the external bus, i.e., address needs to be qualified by one of the Address counter control signals.

© 2019 Renesas Electronics Corporation

Timing Waveform - Entering Sleep Mode (1,2)

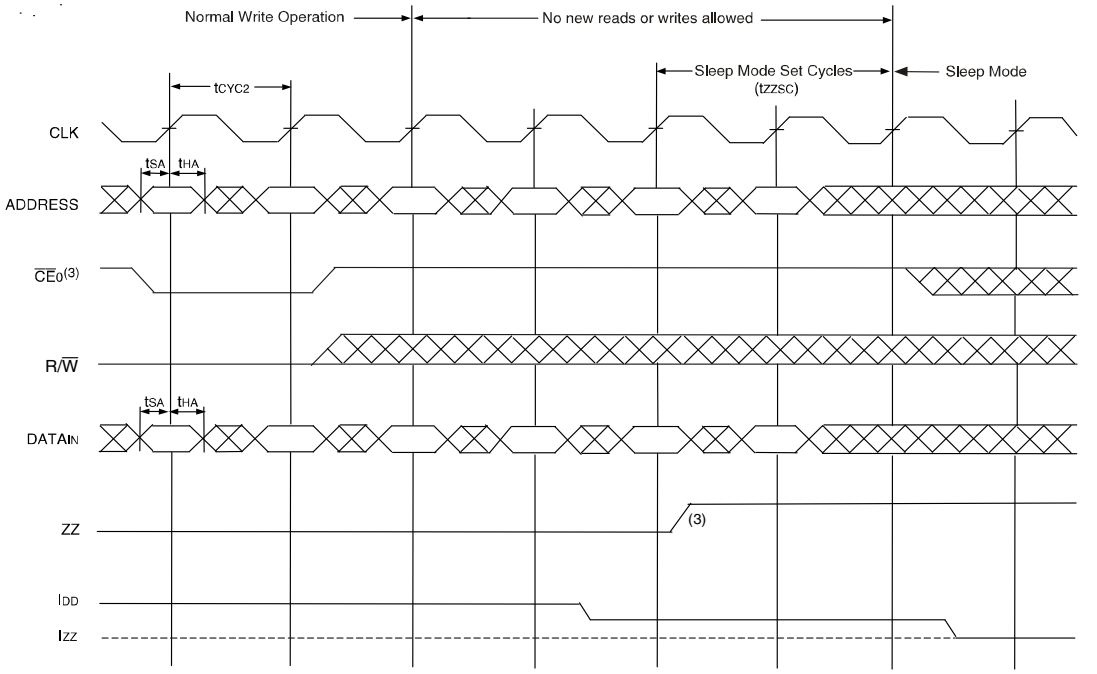

Timing Waveform - Exiting Sleep Mode (1,2)

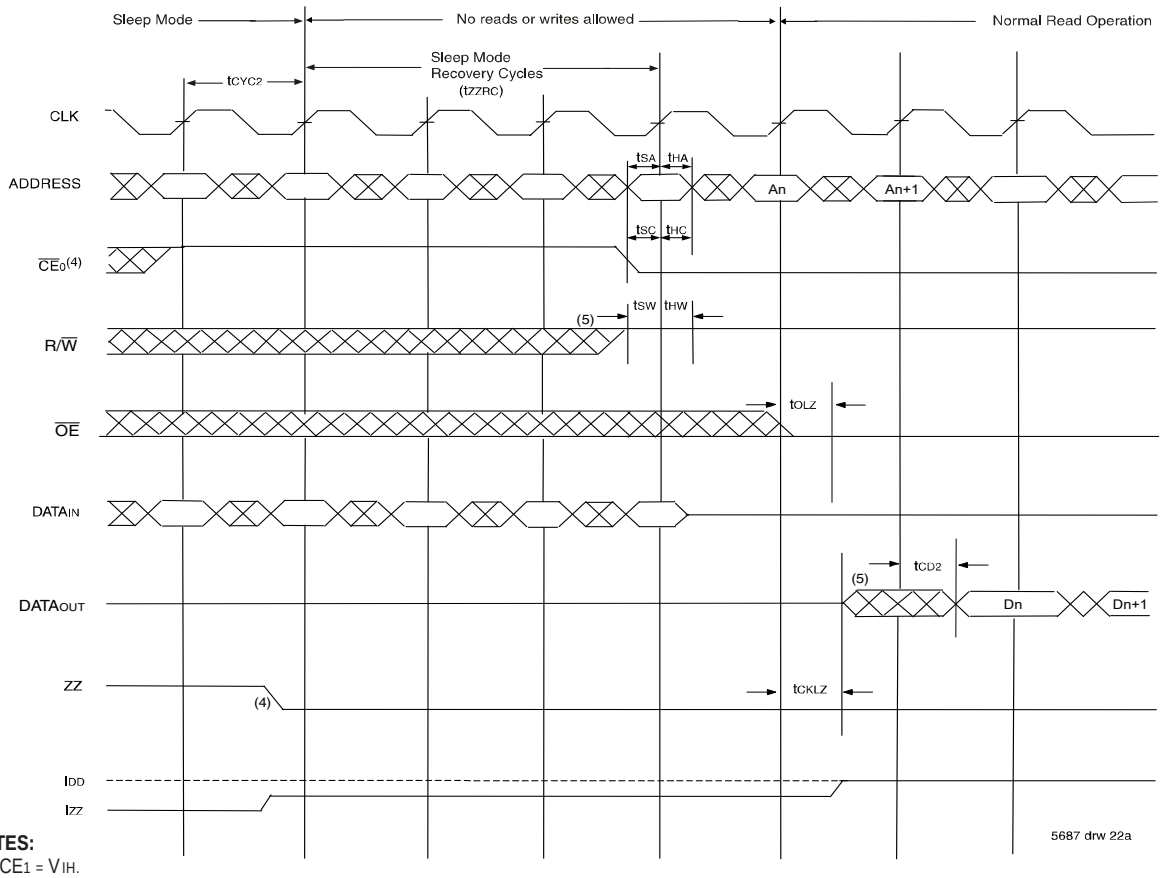

NOTES:

1. $CE_1 = V_{IH}$.
2. All timing is same for Left and Right ports.
3. $\overline{CE}_0$ has to be deactivated ($\overline{CE}_0 = V_{IH}$) three cycles prior to asserting ZZ ($ZZ_X = V_{IH}$) and held for two cycles after asserting ZZ ($ZZ_X = V_{IH}$).
4. $\overline{CE}_0$ has to be deactivated ($\overline{CE}_0 = V_{IH}$) one cycle prior to de-asserting ZZ ($ZZ_X = V_{IL}$) and held for three cycles after de-asserting ZZ ($ZZ_X = V_{IL}$).
5. The device must be in Read Mode (R/$\overline{W}$ High) when exiting sleep mode. Outputs are active but data is not valid until the following cycle.

© 2019 Renesas Electronics Corporation

Functional Description

The IDT70T3719/99M provides a true synchronous Dual-Port Static RAM interface. Registered inputs provide minimal set-up and hold times on address, data, and all critical control inputs. All internal registers are clocked on the rising edge of the clock signal, however, the self-timed internal write pulse width is independent of the cycle time.

An asynchronous output enable is provided to ease asynchronous bus interfacing. Counter enable inputs are also provided to stall the operation of the address counters for fast interleaved memory applications.

A HIGH on $\overline{CE}_0$ or a LOW on CE_1 for one clock cycle will power down the internal circuitry to reduce static power consumption. Multiple chip enables allow easier banking of multiple IDT70T3719/99Ms for depth expansion configurations. Two cycles are required with $\overline{CE}_0$ LOW and CE_1 HIGH to reactivate the outputs.

Interrupts

If the user chooses the interrupt function, a memory location (mail box or message center) is assigned to each port. The left port interrupt flag ($\overline{INT}_L$) is asserted when the right port writes to memory location 3FFFE (HEX), where a write is defined as $\overline{CE}_R$ = R/$\overline{W}_R$ = V_{IL} per the Truth Table I. The left port clears the interrupt through access of address location 3FFFE when $\overline{CE}_L$ = V_{IL} and R/$\overline{W}_L$ = V_{IH}. Likewise, the right port interrupt flag ($\overline{INT}_R$) is asserted when the left port writes to memory location 3FFFF (HEX) and to clear the interrupt flag ($\overline{INT}_R$), the right port must read the memory location 3FFFF (1FFFF or 1FFFE for IDT70T3799M). The message (72 bits) at 3FFFE or 3FFFF (1FFFF or 1FFFE for 70T3799M) is user-defined since it is an addressable SRAM location. If the interrupt function is not used, address locations 3FFFE and 3FFFF (1FFFF or 1FFFE for IDT70T3799M) are not used as mail boxes, but as part of the random access memory. Refer to Truth Table III for the interrupt operation.

Collision Detection

Collision is defined as an overlap in access between the two ports resulting in the potential for either reading or writing incorrect data to a specific address. For the specific cases: (a) Both ports reading - no data is corrupted, lost, or incorrectly output, so no collision flag is output on either port. (b) One port writing, the other port reading - the end result of the write will still be valid. However, the reading port might capture data that is in a state of transition and hence the reading port's collision flag is output. (c) Both ports writing - there is a risk that the two ports will interfere with each other, and the data stored in memory will not be a valid write from either port (it may essentially be a random combination of the two). Therefore, the collision flag is output on both ports. Please refer to Truth Table IV for all of the above cases.

The alert flag ($\overline{COL}_X$) is asserted on the 2nd or 3rd rising clock edge of the affected port following the collision, and remains low for one cycle. Please refer to Collision Detection Timing table on Page 19. During that next cycle, the internal arbitration is engaged in resetting the alert flag (this avoids a specific requirement on the part of the user to reset the alert flag). If two collisions occur on subsequent clock cycles, the second collision may not generate the appropriate alert flag. A third collision will generate the alert flag as appropriate. In the event that a user initiates a burst access on both ports with the same starting address on both ports and one or both ports writing during each access (i.e., imposes a long string of collisions on contiguous clock cycles), the alert flag will be asserted and cleared every other cycle. Please refer to the Collision Detection timing waveform on Page 19.

Collision detection on the IDT70T3719/99M represents a significant advance in functionality over current sync multi-ports, which have no such capability. In addition to this functionality the IDT70T3719/99M sustains the key features of bandwidth and flexibility. The collision detection function is very useful in the case of bursting data, or a string of accesses made to sequential addresses, in that it indicates a problem within the burst, giving the user the option of either repeating the burst or continuing to watch the alert flag to see whether the number of collisions increases above an acceptable threshold value. Offering this function on chip also allows users to reduce their need for arbitration circuits, typically done in CPLD's or FPGA's. This reduces board space and design complexity, and gives the user more flexibility in developing a solution.

Sleep Mode

The IDT70T3719/99M is equipped with an optional sleep or low power mode on both ports. The sleep mode pin on both ports is asynchronous and active high. During normal operation, the ZZ pin is pulled low. When ZZ is pulled high, the port will enter sleep mode where it will meet lowest possible power conditions. The sleep mode timing diagram shows the modes of operation: Normal Operation, No Read/Write Allowed and Sleep Mode.

For normal operation all inputs must meet setup and hold times prior to sleep and after recovering from sleep. Clocks must also meet cycle high and low times during these periods. Three cycles prior to asserting ZZ (ZZ_X = V_{IH}) and three cycles after de-asserting ZZ (ZZ_X = V_{IL}), the device must be disabled via the chip enable pins. If a write or read operation occurs during these periods, the memory array may be corrupted. Validity of data out from the RAM cannot be guaranteed immediately after ZZ is asserted (prior to being in sleep). When exiting sleep mode, the device must be in Read mode (R/$\overline{W}_X$ = V_{IH})when chip enable is asserted, and the chip enable must be valid for one full cycle before a read will result in the output of valid data.

During sleep mode the RAM automatically deselects itself. The RAM disconnects its internal clock buffer. The external clock may continue to run without impacting the RAMs sleep current (I_{ZZ}). All outputs will remain in high-Z state while in sleep mode. All inputs are allowed to toggle. The RAM will not be selected and will not perform any reads or writes.

© 2019 Renesas Electronics Corporation

Depth and Width Expansion

The IDT70T3719/99M features dual chip enables (refer to Truth Table I) in order to facilitate rapid and simple depth expansion with no requirements for external logic. Figure 4 illustrates how to control the various chip enables in order to expand two devices in depth.

The IDT70T3719/99M can also be used in applications requiring expanded width, as indicated in Figure 4. Through combining the control signals, the devices can be grouped as necessary to accommodate applications needing 144-bits.

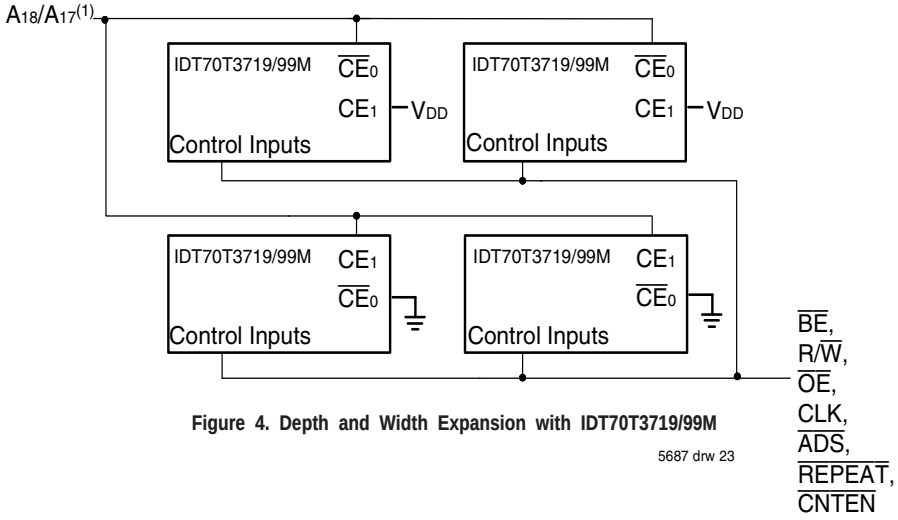

Figure 4. Depth and Width Expansion with IDT70T3719/99M

5687 drw 23

NOTE:
1. A_{18} is for IDT70T3719, A_{17} is for IDT70T3799.

JTAG Functionality and Configuration

The IDT70T3719/99M is composed of two independent memory arrays, and thus cannot be treated as a single JTAG device in the scan chain. The two arrays (A and B) each have identical characteristics and commands but must be treated as separate entities in JTAG operations. Please refer to Figure 5.

JTAG signaling must be provided serially to each array and utilize the information provided in the Identification Register Definitions, Scan Register Sizes, and System Interface Parameter tables. Specifically, commands for Array B must precede those for Array A in any JTAG operations sent to the IDT70T3719/99M. Please reference Application Note AN-411, "JTAG Testing of Multichip Modules" for specific instructions on performing JTAG testing on the IDT70T3719/99M. AN-411 is available at www.idt.com.

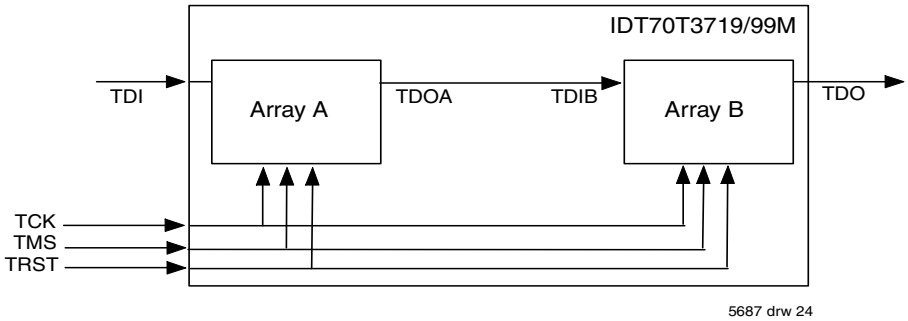

5687 drw 24

Figure 5. JTAG Configuration for IDT70T3719/99M

© 2019 Renesas Electronics Corporation

JTAG Timing Specifications

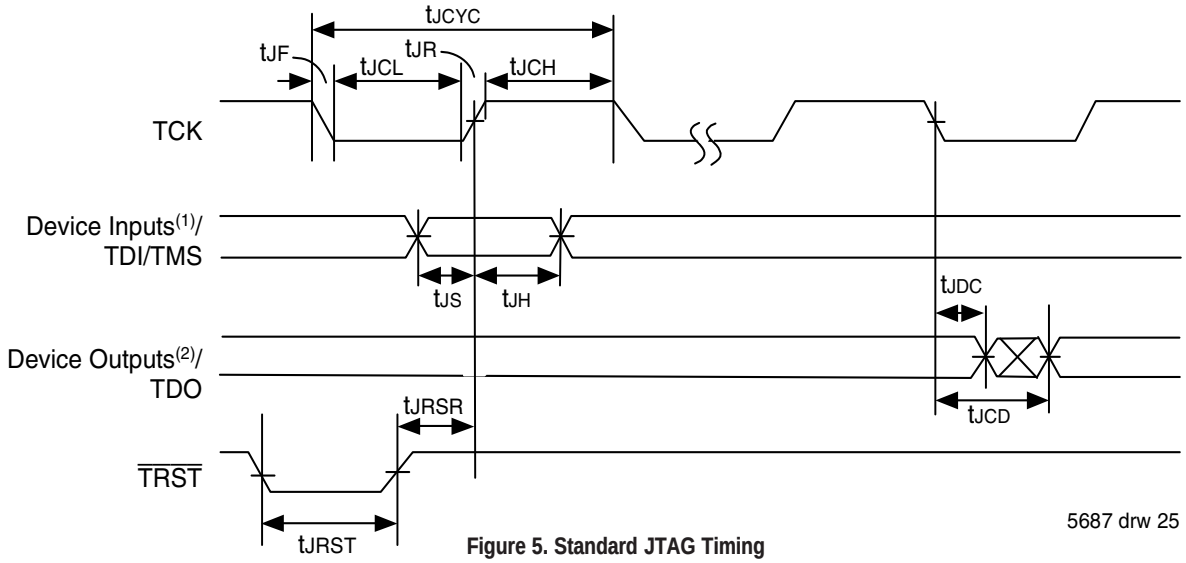

Figure 5. Standard JTAG Timing

NOTES:
1. Device inputs = All device inputs except TDI, TMS, and TRST.
2. Device outputs = All device outputs except TDO.

JTAG AC Electrical Characteristics (1,2,3,4)

Symbol	Parameter	70T3719/99M		
		Min.	Max.	Units
tJCYC	JTAG Clock Input Period	100	—	ns
tJCH	JTAG Clock HIGH	40	—	ns
tJCL	JTAG Clock Low	40	—	ns
tJR	JTAG Clock Rise Time	—	3(1)	ns
tJF	JTAG Clock Fall Time	—	3(1)	ns
tJRST	JTAG Reset	50	—	ns
tJRSR	JTAG Reset Recovery	50	—	ns
tJCD	JTAG Data Output	—	25	ns
tJDC	JTAG Data Output Hold	0	—	ns
tJS	JTAG Setup	15	—	ns
tJH	JTAG Hold	15	—	ns

5687 tbl 16

NOTES:
1. Guaranteed by design.
2. 30pF loading on external output signals.
3. Refer to AC Electrical Test Conditions stated earlier in this document.
4. JTAG operations occur at one speed (10MHz). The base device may run at any speed specified in this datasheet.

© 2019 Renesas Electronics Corporation

Identification Register Definitions

Instruction Field Array B	Value Array B	Instruction Field Array A	Value Array A	Description
Revision Number (31:28)	0x0	Revision Number (63:60)	0x0	Reserved for Version number
IDT Device ID (27:12)(1)	0x330	IDT Device ID (59:44)(1)	0x330	Defines IDT Part number
IDT JEDEC ID (11:1)	0x33	IDT JEDEC ID (43:33)	0x33	Allows unique identification of device vendor as IDT
ID Register Indicator Bit (Bit 0)	1	ID Register Indicator Bit (Bit 32)	1	Indicates the presence of an ID Register

5687 tbl 17

NOTE:
1. Device ID for IDT70T3719M is 0x330. Device ID for IDT70T3799M is 0x331.

Scan Register Sizes

Register Name	Bit Size Array A	Bit Size Array B	Bit Size 70T3719M
Instruction (IR)	4	4	8
Bypass (BYR)	1	1	2
Identification (IDR)	32	32	64
Boundary Scan (BSR)	Note (3)	Note (3)	Note (3)

5687 tbl 18

System Interface Parameters

Instruction	Code	Description
EXTEST	00000000	Forces contents of the boundary scan cells onto the device outputs(1). Places the boundary scan register (BSR) between TDI and TDO.
BYPASS	11111111	Places the bypass register (BYR) between TDI and TDO.
IDCODE	00100010	Loads the ID register (IDR) with the vendor ID code and places the register between TDI and TDO.
HIGHZ	01000100	Places the bypass register (BYR) between TDI and TDO. Forces all device output drivers except $\overline{INT}$x and $\overline{COL}$x to a High-Z state.
CLAMP	00110011	Uses BYR. Forces contents of the boundary scan cells onto the device outputs. Places the bypass register (BYR) between TDI and TDO.
SAMPLE/PRELOAD	00010001	Places the boundary scan register (BSR) between TDI and TDO. SAMPLE allows data from device inputs(2) to be captured in the boundary scan cells and shifted serially through TDO. PRELOAD allows data to be input serially into the boundary scan cells via the TDI.
RESERVED	01010101, 01110111, 10001000, 10011001, 10101010, 10111011, 11001100	Several combinations are reserved. Do not use codes other than those identified above.
PRIVATE	01100110,11101110, 11011101	For internal use only.

5687 tbl 19

NOTES:
1. Device outputs = All device outputs except TDO.
2. Device inputs = All device inputs except TDI, TMS, and $\overline{TRST}$.
3. The Boundary Scan Descriptive Language (BSDL) file for this device is available on the IDT website (www.idt.com), or by contacting your local IDT sales representative.

© 2019 Renesas Electronics Corporation

Ordering Information

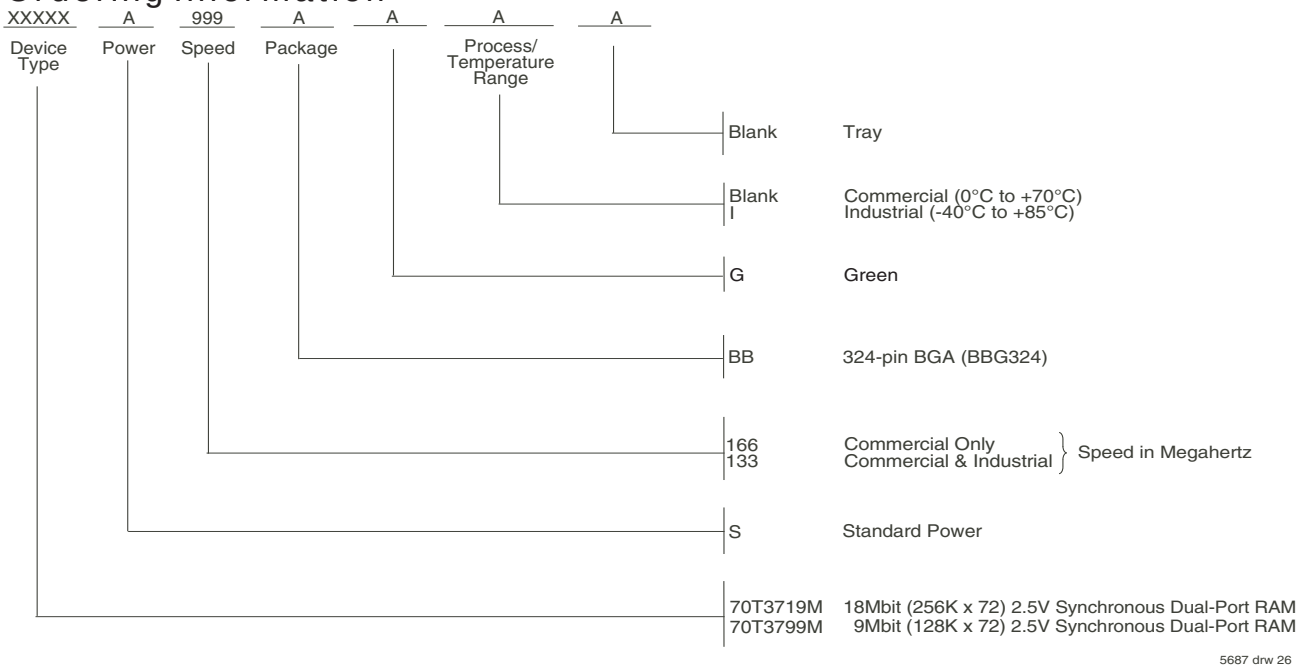

Orderable Part Information

Speed (MHz)	Orderable Part ID	Pkg. Code	Pkg. Type	Temp. Grade
133	70T3719MS133BBG	BBG324	PBGA	C
166	70T3719MS166BBG	BBG324	PBGA	C

Speed (MHz)	Orderable Part ID	Pkg. Code	Pkg. Type	Temp. Grade
133	70T3799MS133BBG	BBG324	PBGA	C
	70T3799MS133BBGI	BBG324	PBGA	I
166	70T3799MS166BBG	BBG324	PBGA	C

Datasheet Document History:

06/27/05:	Initial Datasheet
07/11/07:	Removed Advanced status
01/19/09:	Page 25 Removed "IDT" from orderable part number
08/06/10:	Page 3 Footnote 5 - corrected a typo in the package body and ball-pitch dimensions
	Page 25 Added Tape & Reel to Ordering Information
07/15/14:	Product Discontinuation Notice - PDN# SP-17-02
02/14/18:	Last time buy expires June 15, 2018
10/14/19:	Page 3 Updated package code
	Page 25 Removed Tape & Reel from Ordering Information
	Page 25 Added Orderable Part Information
11/04/19:	Page 25 Corrected "ns" to "MHz" in the header of the Orderable Part Information tables

IMPORTANT NOTICE AND DISCLAIMER

RENESAS ELECTRONICS CORPORATION AND ITS SUBSIDIARIES (“RENESAS”) PROVIDES TECHNICAL SPECIFICATIONS AND RELIABILITY DATA (INCLUDING DATASHEETS), DESIGN RESOURCES (INCLUDING REFERENCE DESIGNS), APPLICATION OR OTHER DESIGN ADVICE, WEB TOOLS, SAFETY INFORMATION, AND OTHER RESOURCES “AS IS” AND WITH ALL FAULTS, AND DISCLAIMS ALL WARRANTIES, EXPRESS OR IMPLIED, INCLUDING, WITHOUT LIMITATION, ANY IMPLIED WARRANTIES OF MERCHANTABILITY, FITNESS FOR A PARTICULAR PURPOSE, OR NON-INFRINGEMENT OF THIRD PARTY INTELLECTUAL PROPERTY RIGHTS.

These resources are intended for developers skilled in the art designing with Renesas products. You are solely responsible for (1) selecting the appropriate products for your application, (2) designing, validating, and testing your application, and (3) ensuring your application meets applicable standards, and any other safety, security, or other requirements. These resources are subject to change without notice. Renesas grants you permission to use these resources only for development of an application that uses Renesas products. Other reproduction or use of these resources is strictly prohibited. No license is granted to any other Renesas intellectual property or to any third party intellectual property. Renesas disclaims responsibility for, and you will fully indemnify Renesas and its representatives against, any claims, damages, costs, losses, or liabilities arising out of your use of these resources. Renesas' products are provided only subject to Renesas' Terms and Conditions of Sale or other applicable terms agreed to in writing. No use of any Renesas resources expands or otherwise alters any applicable warranties or warranty disclaimers for these products.

(Rev.1.0 Mar 2020)

Corporate Headquarters

TOYOSU FORESIA, 3-2-24 Toyosu,
Koto-ku, Tokyo 135-0061, Japan
www.renesas.com

Contact Information

For further information on a product, technology, the most up-to-date version of a document, or your nearest sales office, please visit:
www.renesas.com/contact/

Trademarks

Renesas and the Renesas logo are trademarks of Renesas Electronics Corporation. All trademarks and registered trademarks are the property of their respective owners.

© 2020 Renesas Electronics Corporation. All rights reserved.