# HIGH-SPEED 2.5V 512K x 36 ASYNCHRONOUS DUAL-PORT STATIC RAM WITH 3.3V 0R 2.5V INTERFACE

**70T653M**

## Features

- **True Dual-Port memory cells which allow simultaneous access of the same memory location**
- **High-speed access**
  - *Commercial: 10/12/15ns (max.)*
  - *Industrial: 12ns (max.)*
- **RapidWrite Mode simplifies high-speed consecutive write cycles**
- **Dual chip enables allow for depth expansion without external logic**
- **IDT70T653M easily expands data bus width to 72 bits or more using the Busy Input when cascading more than one device**
- **Busy input for port contention management**
- **Interrupt Flags**
- **Full on-chip hardware support of semaphore signaling between ports**
- **Fully asynchronous operation from either port**
- **Separate byte controls for multiplexed bus and bus matching compatibility**
- **Sleep Mode Inputs on both ports**
- **Single 2.5V (±100mV) power supply for core**
- **LVTTL-compatible, selectable 3.3V (±150mV)/2.5V (±100mV) power supply for I/Os and control signals on each port**
- **Includes JTAG functionality**
- **Available in a 256-ball Ball Grid Array**
- **Industrial temperature range (–40°C to +85°C) is available for selected speeds**
- **Green parts available, see ordering information**

## Functional Block Diagram

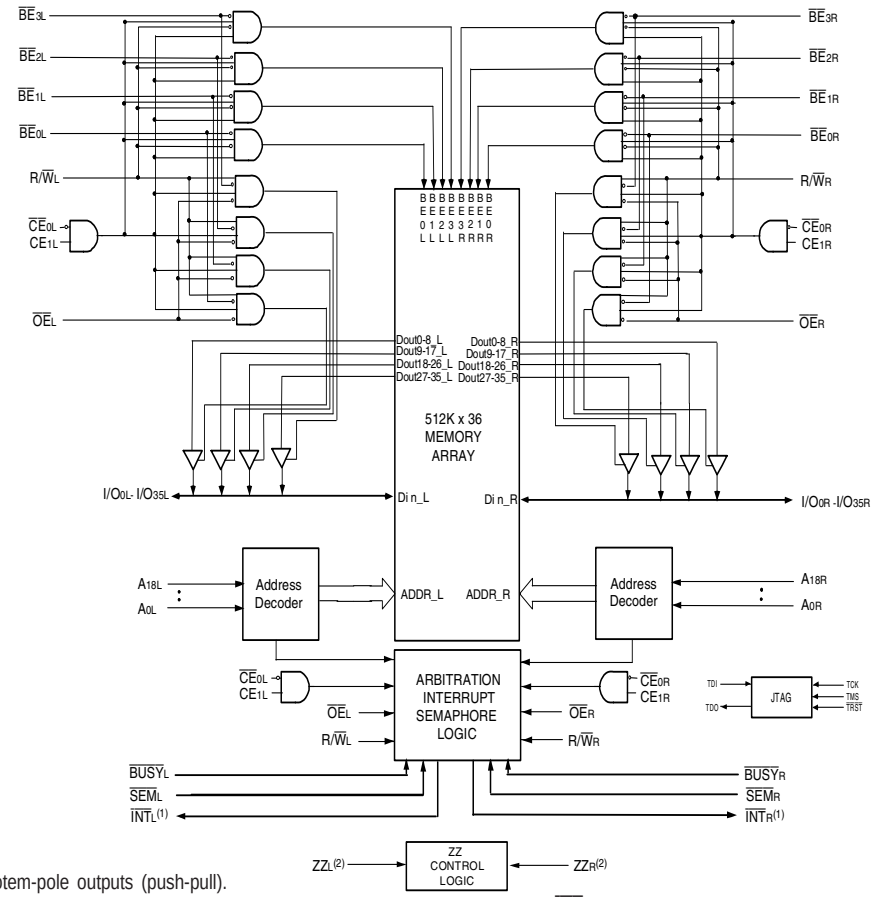


**NOTES:**

1. $\overline{INT}$ is non-tri-state totem-pole outputs (push-pull).
2. The sleep mode pin shuts off all dynamic inputs, except JTAG inputs, when asserted. OPTx, $\overline{INT}$x and the sleep mode pins themselves (ZZx) are not affected during sleep mode.

5679 drw 01

JUNE 2019



DSC-5679/8

© 2019 Renesas Electronics Corporation

## Description

The IDT70T653M is a high-speed 512K x 36 Asynchronous Dual-Port Static RAM. The IDT70T653M is designed to be used as a stand-alone 18874K-bit Dual-Port RAM. This device provides two independent ports with separate control, address, and I/O pins that permit independent, asynchronous access for reads or writes to any location in memory. An automatic power down feature controlled by the chip enables (either $\overline{CE}_0$ or $CE_1$) permit the on-chip circuitry of each port to enter a very low standby power mode.

The IDT70T653M has a RapidWrite Mode which allows the designer to perform back-to-back write operations without pulsing the R/$\overline{W}$ input each cycle. This is especially significant at the 10ns cycle time of the IDT70T653M, easing design considerations at these high performance levels.

The 70T653M can support an operating voltage of either 3.3V or 2.5V on one or both ports, controlled by the OPT pins. The power supply for the core of the device ($V_{DD}$) is at 2.5V.



© 2019 Renesas Electronics Corporation

## Pin Configuration(1,2,3)

70T653M
BC256(4,5)
BCG256(4,5)

256-Pin BGA
Top View

| | | | | | | | | | | | | | | | |
|---|---|---|---|---|---|---|---|---|---|---|---|---|---|---|---|
| A1 NC | A2 TDI | A3 NC | A4 $A_{17L}$ | A5 $A_{14L}$ | A6 $A_{11L}$ | A7 $A_{8L}$ | A8 $\overline{BE}_{2L}$ | A9 $CE_{1L}$ | A10 $\overline{OE}_{L}$ | A11 $\overline{INT}_{L}$ | A12 $A_{5L}$ | A13 $A_{2L}$ | A14 $A_{0L}$ | A15 NC | A16 NC |
| B1 $I/O_{18L}$ | B2 NC | B3 TDO | B4 $A_{18L}$ | B5 $A_{15L}$ | B6 $A_{12L}$ | B7 $A_{9L}$ | B8 $\overline{BE}_{3L}$ | B9 $\overline{CE}_{0L}$ | B10 $R/\overline{W}_{L}$ | B11 NC | B12 $A_{4L}$ | B13 $A_{1L}$ | B14 NC | B15 $I/O_{17L}$ | B16 NC |
| C1 $I/O_{18R}$ | C2 $I/O_{19L}$ | C3 $V_{SS}$ | C4 $A_{16L}$ | C5 $A_{13L}$ | C6 $A_{10L}$ | C7 $A_{7L}$ | C8 $\overline{BE}_{1L}$ | C9 $\overline{BE}_{0L}$ | C10 $\overline{SEM}_{L}$ | C11 $\overline{BUSY}_{L}$ | C12 $A_{6L}$ | C13 $A_{3L}$ | C14 $OPT_{L}$ | C15 $I/O_{17R}$ | C16 $I/O_{16L}$ |
| D1 $I/O_{20R}$ | D2 $I/O_{19R}$ | D3 $I/O_{20L}$ | D4 $V_{DD}$ | D5 $V_{DDQL}$ | D6 $V_{DDQL}$ | D7 $V_{DDQR}$ | D8 $V_{DDQR}$ | D9 $V_{DDQL}$ | D10 $V_{DDQL}$ | D11 $V_{DDQR}$ | D12 $V_{DDQR}$ | D13 $V_{DD}$ | D14 $I/O_{15R}$ | D15 $I/O_{15L}$ | D16 $I/O_{16R}$ |
| E1 $I/O_{21R}$ | E2 $I/O_{21L}$ | E3 $I/O_{22L}$ | E4 $V_{DDQL}$ | E5 $V_{DD}$ | E6 $V_{DD}$ | E7 $V_{SS}$ | E8 $V_{SS}$ | E9 $V_{SS}$ | E10 $V_{SS}$ | E11 $V_{DD}$ | E12 $V_{DD}$ | E13 $V_{DDQR}$ | E14 $I/O_{13L}$ | E15 $I/O_{14L}$ | E16 $I/O_{14R}$ |
| F1 $I/O_{23L}$ | F2 $I/O_{22R}$ | F3 $I/O_{23R}$ | F4 $V_{DDQL}$ | F5 $V_{DD}$ | F6 NC | F7 $V_{SS}$ | F8 $V_{SS}$ | F9 $V_{SS}$ | F10 $V_{SS}$ | F11 $V_{SS}$ | F12 $V_{DD}$ | F13 $V_{DDQR}$ | F14 $I/O_{12R}$ | F15 $I/O_{13R}$ | F16 $I/O_{12L}$ |
| G1 $I/O_{24R}$ | G2 $I/O_{24L}$ | G3 $I/O_{25L}$ | G4 $V_{DDQR}$ | G5 $V_{SS}$ | G6 $V_{SS}$ | G7 $V_{SS}$ | G8 $V_{SS}$ | G9 $V_{SS}$ | G10 $V_{SS}$ | G11 $V_{SS}$ | G12 $V_{SS}$ | G13 $V_{DDQL}$ | G14 $I/O_{10L}$ | G15 $I/O_{11L}$ | G16 $I/O_{11R}$ |
| H1 $I/O_{26L}$ | H2 $I/O_{25R}$ | H3 $I/O_{26R}$ | H4 $V_{DDQR}$ | H5 $V_{SS}$ | H6 $V_{SS}$ | H7 $V_{SS}$ | H8 $V_{SS}$ | H9 $V_{SS}$ | H10 $V_{SS}$ | H11 $V_{SS}$ | H12 $V_{SS}$ | H13 $V_{DDQL}$ | H14 $I/O_{9R}$ | H15 $IO_{9L}$ | H16 $I/O_{10R}$ |
| J1 $I/O_{27L}$ | J2 $I/O_{28R}$ | J3 $I/O_{27R}$ | J4 $V_{DDQL}$ | J5 $ZZ_{R}$ | J6 $V_{SS}$ | J7 $V_{SS}$ | J8 $V_{SS}$ | J9 $V_{SS}$ | J10 $V_{SS}$ | J11 $V_{SS}$ | J12 $ZZ_{L}$ | J13 $V_{DDQR}$ | J14 $I/O_{8R}$ | J15 $I/O_{7R}$ | J16 $I/O_{8L}$ |
| K1 $I/O_{29R}$ | K2 $I/O_{29L}$ | K3 $I/O_{28L}$ | K4 $V_{DDQL}$ | K5 $V_{SS}$ | K6 $V_{SS}$ | K7 $V_{SS}$ | K8 $V_{SS}$ | K9 $V_{SS}$ | K10 $V_{SS}$ | K11 $V_{SS}$ | K12 $V_{SS}$ | K13 $V_{DDQR}$ | K14 $I/O_{6R}$ | K15 $I/O_{6L}$ | K16 $I/O_{7L}$ |
| L1 $I/O_{30L}$ | L2 $I/O_{31R}$ | L3 $I/O_{30R}$ | L4 $V_{DDQR}$ | L5 $V_{DD}$ | L6 NC | L7 $V_{SS}$ | L8 $V_{SS}$ | L9 $V_{SS}$ | L10 $V_{SS}$ | L11 $V_{SS}$ | L12 $V_{DD}$ | L13 $V_{DDQL}$ | L14 $I/O_{5L}$ | L15 $I/O_{4R}$ | L16 $I/O_{5R}$ |
| M1 $I/O_{32R}$ | M2 $I/O_{32L}$ | M3 $I/O_{31L}$ | M4 $V_{DDQR}$ | M5 $V_{DD}$ | M6 $V_{DD}$ | M7 $V_{SS}$ | M8 $V_{SS}$ | M9 $V_{SS}$ | M10 $V_{SS}$ | M11 $V_{DD}$ | M12 $V_{DD}$ | M13 $V_{DDQL}$ | M14 $I/O_{3R}$ | M15 $I/O_{3L}$ | M16 $I/O_{4L}$ |
| N1 $I/O_{33L}$ | N2 $I/O_{34R}$ | N3 $I/O_{33R}$ | N4 $V_{DD}$ | N5 $V_{DDQR}$ | N6 $V_{DDQR}$ | N7 $V_{DDQL}$ | N8 $V_{DDQL}$ | N9 $V_{DDQR}$ | N10 $V_{DDQR}$ | N11 $V_{DDQL}$ | N12 $V_{DDQL}$ | N13 $V_{DD}$ | N14 $I/O_{2L}$ | N15 $I/O_{1R}$ | N16 $I/O_{2R}$ |
| P1 $I/O_{35R}$ | P2 $I/O_{34L}$ | P3 TMS | P4 $A_{16R}$ | P5 $A_{13R}$ | P6 $A_{10R}$ | P7 $A_{7R}$ | P8 $\overline{BE}_{1R}$ | P9 $\overline{BE}_{0R}$ | P10 $\overline{SEM}_{R}$ | P11 $\overline{BUSY}_{R}$ | P12 $A_{6R}$ | P13 $A_{3R}$ | P14 $I/O_{0L}$ | P15 $I/O_{0R}$ | P16 $I/O_{1L}$ |
| R1 $I/O_{35L}$ | R2 NC | R3 $\overline{TRST}$ | R4 $A_{18R}$ | R5 $A_{15R}$ | R6 $A_{12R}$ | R7 $A_{9R}$ | R8 $\overline{BE}_{3R}$ | R9 $\overline{CE}_{0R}$ | R10 $R/\overline{W}_{R}$ | R11 $V_{SS}$ | R12 $A_{4R}$ | R13 $A_{1R}$ | R14 $OPT_{R}$ | R15 NC | R16 NC |
| T1 NC | T2 TCK | T3 NC | T4 $A_{17R}$ | T5 $A_{14R}$ | T6 $A_{11R}$ | T7 $A_{8R}$ | T8 $\overline{BE}_{2R}$ | T9 $CE_{1R}$ | T10 $\overline{OE}_{R}$ | T11 $\overline{INT}_{R}$ | T12 $A_{5R}$ | T13 $A_{2R}$ | T14 $A_{0R}$ | T15 NC | T16 NC |

5679 drw 02f

**NOTES:**
1. All $V_{DD}$ pins must be connected to 2.5V power supply.
2. All $V_{DDQ}$ pins must be connected to appropriate power supply: 3.3V if OPT pin for that port is set to $V_{DD}$ (2.5V), and 2.5V if OPT pin for that port is set to $V_{SS}$ (0V).
3. All $V_{SS}$ pins must be connected to ground supply.
4. Package body is approximately 17mm x 17mm x 1.4mm, with 1.0mm ball-pitch.
5. This package code is used to reference the package diagram.



© 2019 Renesas Electronics Corporation

## Pin Names

| Left Port | Right Port | Names |
|---|---|---|
| $\overline{CE}_{0L}$, $CE_{1L}$ | $\overline{CE}_{0R}$, $CE_{1R}$ | Chip Enables (Input) |
| R/$\overline{W}_L$ | R/$\overline{W}_R$ | Read/Write Enable (Input) |
| $\overline{OE}_L$ | $\overline{OE}_R$ | Output Enable (Input) |
| $A_{0L}$ - $A_{18L}$ | $A_{0R}$ - $A_{18R}$ | Address (Input) |
| $I/O_{0L}$ - $I/O_{35L}$ | $I/O_{0R}$ - $I/O_{35R}$ | Data Input/Output |
| $\overline{SEM}_L$ | $\overline{SEM}_R$ | Semaphore Enable (Input) |
| $\overline{INT}_L$ | $\overline{INT}_R$ | Interrupt Flag (Output) |
| $\overline{BUSY}_L$ | $\overline{BUSY}_R$ | Busy Input |
| $\overline{BE}_{0L}$ - $\overline{BE}_{3L}$ | $\overline{BE}_{0R}$ - $\overline{BE}_{3R}$ | Byte Enables (9-bit bytes) (Input) |
| $V_{DDQL}$ | $V_{DDQR}$ | Power (I/O Bus) (3.3V or 2.5V)(1) (Input) |
| $OPT_L$ | $OPT_R$ | Option for selecting $V_{DDQX}$(1,2) (Input) |
| $ZZ_L$ | $ZZ_R$ | Sleep Mode Pin(3) (Input) |
| $V_{DD}$ | | Power (2.5V)(1) (Input) |
| $V_{SS}$ | | Ground (0V) (Input) |
| TDI | | Test Data Input |
| TDO | | Test Data Output |
| TCK | | Test Logic Clock (10MHz) (Input) |
| TMS | | Test Mode Select (Input) |
| $\overline{TRST}$ | | Reset (Initialize TAP Controller) (Input) |

5679 tbl 01

**NOTES:**

1. $V_{DD}$, $OPT_X$, and $V_{DDQX}$ must be set to appropriate operating levels prior to applying inputs on $I/O_X$.
2. $OPT_X$ selects the operating voltage levels for the I/Os and controls on that port. If $OPT_X$ is set to $V_{DD}$ (2.5V), then that port's I/Os and controls will operate at 3.3V levels and $V_{DDQX}$ must be supplied at 3.3V. If $OPT_X$ is set to $V_{SS}$ (0V), then that port's I/Os and controls will operate at 2.5V levels and $V_{DDQX}$ must be supplied at 2.5V. The OPT pins are independent of one another—both ports can operate at 3.3V levels, both can operate at 2.5V levels, or either can operate at 3.3V with the other at 2.5V.
3. The sleep mode pin shuts off all dynamic inputs, except JTAG inputs, when asserted. $OPT_X$, $\overline{INT}_X$ and the sleep mode pins themselves ($ZZ_X$) are not affected during sleep mode. It is recommended that boundary scan not be operated during sleep mode.



© 2019 Renesas Electronics Corporation

## Truth Table I—Read/Write and Enable Control(1,2)

| $\overline{OE}$ | $\overline{SEM}$ | $\overline{CE}_0$ | $CE_1$ | $\overline{BE}_3$ | $\overline{BE}_2$ | $\overline{BE}_1$ | $\overline{BE}_0$ | R/$\overline{W}$ | ZZ | Byte 3 $I/O_{27-35}$ | Byte 2 $I/O_{18-26}$ | Byte 1 $I/O_{9-17}$ | Byte 0 $I/O_{0-8}$ | MODE |
|---|---|---|---|---|---|---|---|---|---|---|---|---|---|---|
| X | H | H | X | X | X | X | X | X | L | High-Z | High-Z | High-Z | High-Z | Deselected–Power Down |
| X | H | X | L | X | X | X | X | X | L | High-Z | High-Z | High-Z | High-Z | Deselected–Power Down |
| X | H | L | H | H | H | H | H | X | L | High-Z | High-Z | High-Z | High-Z | All Bytes Deselected |
| X | H | L | H | H | H | H | L | L | L | High-Z | High-Z | High-Z | $D_{IN}$ | Write to Byte 0 Only |
| X | H | L | H | H | H | L | H | L | L | High-Z | High-Z | $D_{IN}$ | High-Z | Write to Byte 1 Only |
| X | H | L | H | H | L | H | H | L | L | High-Z | $D_{IN}$ | High-Z | High-Z | Write to Byte 2 Only |
| X | H | L | H | L | H | H | H | L | L | $D_{IN}$ | High-Z | High-Z | High-Z | Write to Byte 3 Only |
| X | H | L | H | H | H | L | L | L | L | High-Z | High-Z | $D_{IN}$ | $D_{IN}$ | Write to Lower 2 Bytes Only |
| X | H | L | H | L | L | H | H | L | L | $D_{IN}$ | $D_{IN}$ | High-Z | High-Z | Write to Upper 2 bytes Only |
| X | H | L | H | L | L | L | L | L | L | $D_{IN}$ | $D_{IN}$ | $D_{IN}$ | $D_{IN}$ | Write to All Bytes |
| L | H | L | H | H | H | H | L | H | L | High-Z | High-Z | High-Z | $D_{OUT}$ | Read Byte 0 Only |
| L | H | L | H | H | H | L | H | H | L | High-Z | High-Z | $D_{OUT}$ | High-Z | Read Byte 1 Only |
| L | H | L | H | H | L | H | H | H | L | High-Z | $D_{OUT}$ | High-Z | High-Z | Read Byte 2 Only |
| L | H | L | H | L | H | H | H | H | L | $D_{OUT}$ | High-Z | High-Z | High-Z | Read Byte 3 Only |
| L | H | L | H | H | H | L | L | H | L | High-Z | High-Z | $D_{OUT}$ | $D_{OUT}$ | Read Lower 2 Bytes Only |
| L | H | L | H | L | L | H | H | H | L | $D_{OUT}$ | $D_{OUT}$ | High-Z | High-Z | Read Upper 2 Bytes Only |
| L | H | L | H | L | L | L | L | H | L | $D_{OUT}$ | $D_{OUT}$ | $D_{OUT}$ | $D_{OUT}$ | Read All Bytes |
| H | H | L | H | L | L | L | L | X | L | High-Z | High-Z | High-Z | High-Z | Outputs Disabled |
| X | X | X | X | X | X | X | X | X | H | High-Z | High-Z | High-Z | High-Z | High-Z Sleep Mode |

5679 tbl 02

**NOTES:**
1. "H" = $V_{IH}$, "L" = $V_{IL}$, "X" = Don't Care.
2. It is possible to read or write any combination of bytes during a given access. A few representative samples have been illustrated here.

## Truth Table II – Semaphore Read/Write Control(1)

| Inputs(1) | | | | | | | | Outputs | | |
|---|---|---|---|---|---|---|---|---|---|---|
| $\overline{CE}$(2) | R/$\overline{W}$ | $\overline{OE}$ | $\overline{BE}_3$ | $\overline{BE}_2$ | $\overline{BE}_1$ | $\overline{BE}_0$ | $\overline{SEM}$ | $I/O_{1-8}$, $I/O_{18-26}$ | $I/O_0$ | Mode |
| H | H | L | X | L | X | L | L | $DATA_{OUT}$ | $DATA_{OUT}$ | Read Data in Semaphore Flag(3) |
| H | ↑ | X | X | X | X | L | L | X | $DATA_{IN}$ | Write $I/O_0$ into Semaphore Flag |
| L | X | X | X | X | X | X | L | —— | —— | Not Allowed |

5679 tbl 03

**NOTES:**
1. There are eight semaphore flags written to $I/O_0$ and read from the I/Os ($I/O_0$-$I/O_{08}$ and $I/O_{18}$-$I/O_{26}$). These eight semaphore flags are addressed by $A_0$-$A_2$.
2. $\overline{CE}$ = L occurs when $\overline{CE}_0$ = $V_{IL}$ and $CE_1$ = $V_{IH}$. $\overline{CE}$ = H when $\overline{CE}_0$ = $V_{IH}$ and/or $CE_1$ = $V_{IL}$.
3. Each byte is controlled by the respective $\overline{BE}$n. To read data $\overline{BE}$n = $V_{IL}$.



© 2019 Renesas Electronics Corporation

## Recommended Operating Temperature and Supply Voltage(1)

| Grade | Ambient Temperature | GND | VDD |
|---|---|---|---|
| Commercial | 0°C to +70°C | 0V | 2.5V ± 100mV |
| Industrial | -40°C to +85°C | 0V | 2.5V ± 100mV |

5679 tbl 04

**NOTE:**
1. This is the parameter TA. This is the "instant on" case temperature.

## Capacitance(1)

(TA = +25°C, F = 1.0MHz) PQFP ONLY

| Symbol | Parameter | Conditions | Max. | Unit |
|---|---|---|---|---|
| CIN | Input Capacitance | VIN = 0V | 15 | pF |
| COUT(2) | Output Capacitance | VOUT = 0V | 10.5 | pF |

5679 tbl 08

**NOTES:**
1. These parameters are determined by device characterization, but are not production tested.
2. COUT also references CI/O.

## Absolute Maximum Ratings(1)

| Symbol | Rating | Commercial & Industrial | Unit |
|---|---|---|---|
| VTERM (VDD) | VDD Terminal Voltage with Respect to GND | -0.5 to 3.6 | V |
| VTERM(2) (VDDQ) | VDDQ Terminal Voltage with Respect to GND | -0.3 to VDDQ + 0.3 | V |
| VTERM(2) (INPUTS and I/O's) | Input and I/O Terminal Voltage with Respect to GND | -0.3 to VDDQ + 0.3 | V |
| TBIAS(3) | Temperature Under Bias | -55 to +125 | °C |
| TSTG | Storage Temperature | -65 to +150 | °C |
| TJN | Junction Temperature | +150 | °C |
| IOUT(For VDDQ = 3.3V) | DC Output Current | 50 | mA |
| IOUT(For VDDQ = 2.5V) | DC Output Current | 40 | mA |

5679 tbl 07

**NOTES:**
1. Stresses greater than those listed under ABSOLUTE MAXIMUM RATINGS may cause permanent damage to the device. This is a stress rating only and functional operation of the device at these or any other conditions above those indicated in the operational sections of this specification is not implied. Exposure to absolute maximum rating conditions for extended periods may affect reliability.
2. This is a steady-state DC parameter that applies after the power supply has reached its nominal operating value. Power sequencing is not necessary; however, the voltage on any Input or I/O pin cannot exceed VDDQ during power supply ramp up.
3. Ambient Temperature under DC Bias. No AC Conditions. Chip Deselected.

## Recommended DC Operating Conditions with VDDQ at 2.5V

| Symbol | Parameter | Min. | Typ. | Max. | Unit |
|---|---|---|---|---|---|
| VDD | Core Supply Voltage | 2.4 | 2.5 | 2.6 | V |
| VDDQ | I/O Supply Voltage(3) | 2.4 | 2.5 | 2.6 | V |
| VSS | Ground | 0 | 0 | 0 | V |
| VIH | Input High Volltage (Address, Control & Data I/O Inputs)(3) | 1.7 | — | VDDQ + 100mV(2) | V |
| VIH | Input High Voltage – JTAG | 1.7 | — | VDD + 100mV(2) | V |
| VIH | Input High Voltage - ZZ, $\overline{OPT}$ | VDD - 0.2V | — | VDD + 100mV(2) | V |
| VIL | Input Low Voltage | -0.3(1) | — | 0.7 | V |
| VIL | Input Low Voltage - ZZ, $\overline{OPT}$ | -0.3(1) | — | 0.2 | V |

5679 tbl 05

**NOTES:**
1. VIL (min.) = -1.0V for pulse width less than tRC/2 or 5ns, whichever is less.
2. VIH (max.) = VDDQ + 1.0V for pulse width less than tRC/2 or 5ns, whichever is less.
3. To select operation at 2.5V levels on the I/Os and controls of a given port, the OPT pin for that port must be set to VSS(0V), and VDDQX for that port must be supplied as indicated above.

## Recommended DC Operating Conditions with VDDQ at 3.3V

| Symbol | Parameter | Min. | Typ. | Max. | Unit |
|---|---|---|---|---|---|
| VDD | Core Supply Voltage | 2.4 | 2.5 | 2.6 | V |
| VDDQ | I/O Supply Voltage(3) | 3.15 | 3.3 | 3.45 | V |
| VSS | Ground | 0 | 0 | 0 | V |
| VIH | Input High Voltage (Address, Control &Data I/O Inputs)(3) | 2.0 | — | VDDQ + 150mV(2) | V |
| VIH | Input High Voltage – JTAG | 1.7 | — | VDD + 100mV(2) | V |
| VIH | Input High Voltage - ZZ, $\overline{OPT}$ | VDD - 0.2V | — | VDD + 100mV(2) | V |
| VIL | Input Low Voltage | -0.3(1) | — | 0.8 | V |
| VIL | Input Low Voltage - ZZ, $\overline{OPT}$ | -0.3(1) | — | 0.2 | V |

5679 tbl 06

**NOTES:**
1. VIL (min.) = -1.0V for pulse width less than tRC/2 or 5ns, whichever is less.
2. VIH (max.) = VDDQ + 1.0V for pulse width less than tRC/2 or 5ns, whichever is less.
3. To select operation at 3.3V levels on the I/Os and controls of a given port, the OPT pin for that port must be set to VDD (2.5V), and VDDQX for that port must be supplied as indicated above.



© 2019 Renesas Electronics Corporation

## DC Electrical Characteristics Over the Operating Temperature and Supply Voltage Range ($V_{DD}$ = 2.5V ± 100mV)

| Symbol | Parameter | Test Conditions | 70T653M Min. | 70T653M Max. | Unit |
|---|---|---|---|---|---|
| $\|I_{LI}\|$ | Input Leakage Current[1] | $V_{DDQ}$ = Max., $V_{IN}$ = 0V to $V_{DDQ}$ | — | 10 | µA |
| $\|I_{LI}\|$ | JTAG & ZZ Input Leakage Current[1,2] | $V_{DD}$ = Max., $V_{IN}$ = 0V to $V_{DD}$ | — | ±60 | µA |
| $\|I_{LO}\|$ | Output Leakage Current[1,3] | $\overline{CE}_0$ = $V_{IH}$ or $CE_1$ = $V_{IL}$, $V_{OUT}$ = 0V to $V_{DDQ}$ | — | 10 | µA |
| $V_{OL}$ (3.3V) | Output Low Voltage[1] | $I_{OL}$ = +4mA, $V_{DDQ}$ = Min. | — | 0.4 | V |
| $V_{OH}$ (3.3V) | Output High Voltage[1] | $I_{OH}$ = -4mA, $V_{DDQ}$ = Min. | 2.4 | — | V |
| $V_{OL}$ (2.5V) | Output Low Voltage[1] | $I_{OL}$ = +2mA, $V_{DDQ}$ = Min. | — | 0.4 | V |
| $V_{OH}$ (2.5V) | Output High Voltage[1] | $I_{OH}$ = -2mA, $V_{DDQ}$ = Min. | 2.0 | — | V |

5679 tbl 09

**NOTES:**
1. $V_{DDQ}$ is selectable (3.3V/2.5V) via OPT pins. Refer to page 6 for details.
2. Applicable only for TMS, TDI and $\overline{TRST}$ inputs.
3. Outputs tested in tri-state mode.

## DC Electrical Characteristics Over the Operating Temperature and Supply Voltage Range[3] ($V_{DD}$ = 2.5V ± 100mV)

| Symbol | Parameter | Test Condition | Version | | 70T653MS10 Com'l Only Typ.[4] | 70T653MS10 Com'l Only Max. | 70T653MS12 Com'l & Ind Typ.[4] | 70T653MS12 Com'l & Ind Max. | 70T653MS15 Com'l Only Typ.[4] | 70T653MS15 Com'l Only Max. | Unit |
|---|---|---|---|---|---|---|---|---|---|---|---|
| $I_{DD}$ | Dynamic Operating Current (Both Ports Active) | $\overline{CE}_L$ and $\overline{CE}_R$= $V_{IL}$, Outputs Disabled f = $f_{MAX}$[1] | COM'L | S | 600 | 810 | 600 | 710 | 450 | 600 | mA |
| | | | IND | S | — | — | 600 | 790 | — | — | |
| $I_{SB1}$[6] | Standby Current (Both Ports - TTL Level Inputs) | $\overline{CE}_L$ = $\overline{CE}_R$ = $V_{IH}$ f = $f_{MAX}$[1] | COM'L | S | 180 | 240 | 150 | 210 | 120 | 170 | mA |
| | | | IND | S | — | — | 150 | 260 | — | — | |
| $I_{SB2}$[6] | Standby Current (One Port - TTL Level Inputs) | $\overline{CE}_{"A"}$ = $V_{IL}$ and $\overline{CE}_{"B"}$ = $V_{IH}$[5] Active Port Outputs Disabled, f = $f_{MAX}$[1] | COM'L | S | 400 | 530 | 360 | 460 | 300 | 400 | mA |
| | | | IND | S | — | — | 360 | 510 | — | — | |
| $I_{SB3}$ | Full Standby Current (Both Ports - CMOS Level Inputs) | Both Ports $\overline{CE}_L$ and $\overline{CE}_R$ ≥ $V_{DDQ}$ - 0.2V, $V_{IN}$ ≥ $V_{DDQ}$ - 0.2V or $V_{IN}$ ≤ 0.2V, f = 0[2] | COM'L | S | 4 | 20 | 4 | 20 | 4 | 20 | mA |
| | | | IND | S | — | — | 4 | 40 | — | — | |
| $I_{SB4}$[6] | Full Standby Current (One Port - CMOS Level Inputs) | $\overline{CE}_{"A"}$ ≤ 0.2V and $\overline{CE}_{"B"}$ ≥ $V_{DDQ}$ - 0.2V[5] $V_{IN}$ ≥ $V_{DDQ}$ - 0.2V or $V_{IN}$ ≤ 0.2V, Active Port, Outputs Disabled, f = $f_{MAX}$[1] | COM'L | S | 400 | 530 | | 460 | 300 | 400 | mA |
| | | | IND | S | — | — | 360 | 510 | — | — | |
| $I_{ZZ}$ | Sleep Mode Current (Both Ports - TTL Level Inputs) | $ZZ_L$ = $ZZ_R$ = $V_{IH}$ f = $f_{MAX}$[1] | COM'L | S | 4 | 20 | 4 | 20 | 4 | 20 | mA |
| | | | IND | S | — | — | 4 | 40 | — | — | |

5679 tbl 10

**NOTES:**
1. At f = $f_{MAX}$, address and control lines (except Output Enable) are cycling at the maximum frequency read cycle of 1/$t_{RC}$, using "AC TEST CONDITIONS" at input levels of GND to 3.3V.
2. f = 0 means no address or control lines change. Applies only to input at CMOS level standby.
3. Port "A" may be either left or right port. Port "B" is the opposite from port "A".
4. $V_{DD}$ = 3.3V, $T_A$ = 25°C for Typ, and are not production tested. $I_{DD\,DC}$(f=0) = 200mA (Typ).
5. $\overline{CE}_X$ = $V_{IL}$ means $\overline{CE}_{0X}$ = $V_{IL}$ and $CE_{1X}$ = $V_{IH}$
   $\overline{CE}_X$ = $V_{IH}$ means $\overline{CE}_{0X}$ = $V_{IH}$ or $CE_{1X}$ = $V_{IL}$
   $\overline{CE}_X$ ≤ 0.2V means $\overline{CE}_{0X}$ ≤ 0.2V and $CE_{1X}$ ≥ $V_{DDQX}$ - 0.2V
   $\overline{CE}_X$ ≥ $V_{DDQX}$ - 0.2V means $\overline{CE}_{0X}$ ≥ $V_{DDQX}$ - 0.2V or $CE_{1X}$ ≤ 0.2V.
   "X" represents "L" for left port or "R" for right port.
6. $I_{SB1}$, $I_{SB2}$ and $I_{SB4}$ will all reach full standby levels ($I_{SB3}$) on the appropriate port(s) if $ZZ_L$ and /or $ZZ_R$ = $V_{IH}$.



© 2019 Renesas Electronics Corporation

## AC Test Conditions ($V_{DDQ}$ - 3.3V/2.5V)

| | |
|---|---|
| Input Pulse Levels | GND to 3.0V / GND to 2.4V |
| Input Rise/Fall Times | 2ns Max. |
| Input Timing Reference Levels | 1.5V/1.25V |
| Output Reference Levels | 1.5V/1.25V |
| Output Load | Figure 1 |

5679 tbl 11

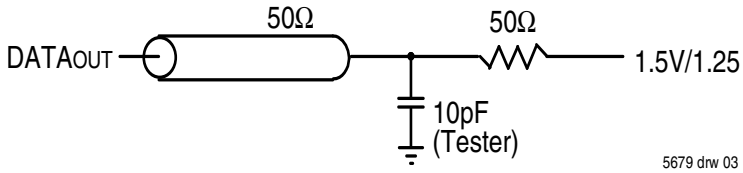


**Figure 1. AC Output Test load.**

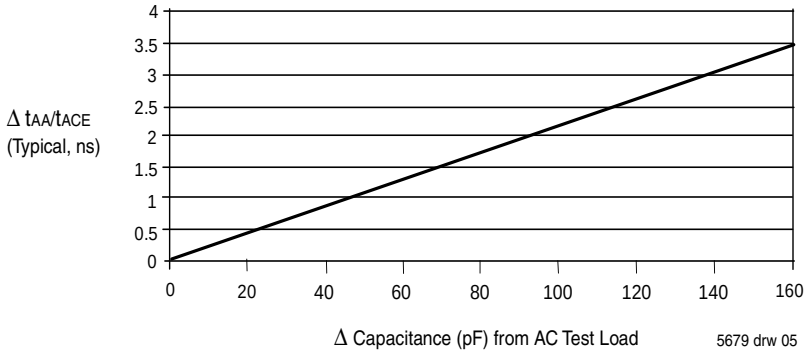


**Figure 3. Typical Output Derating (Lumped Capacitive Load).**



© 2019 Renesas Electronics Corporation

## AC Electrical Characteristics Over the Operating Temperature and Supply Voltage Range(4)

| Symbol | Parameter | 70T653MS10 Com'l Only | | 70T653MS12 Com'l & Ind | | 70T653MS15 Com'l Only | | Unit |
|---|---|---|---|---|---|---|---|---|
| | | Min. | Max. | Min. | Max. | Min. | Max. | |
| **READ CYCLE** | | | | | | | | |
| $t_{RC}$ | Read Cycle Time | 10 | — | 12 | — | 15 | — | ns |
| $t_{AA}$ | Address Access Time | — | 10 | — | 12 | — | 15 | ns |
| $t_{ACE}$ | Chip Enable Access Time(3) | — | 10 | — | 12 | — | 15 | ns |
| $t_{ABE}$ | Byte Enable Access Time(3) | — | 5 | — | 6 | — | 7 | ns |
| $t_{AOE}$ | Output Enable Access Time | — | 5 | — | 6 | — | 7 | ns |
| $t_{OH}$ | Output Hold from Address Change | 3 | — | 3 | — | 3 | — | ns |
| $t_{LZ}$ | Output Low-Z Time Chip Enable and Semaphore(1,2) | 3 | — | 3 | — | 3 | — | ns |
| $t_{LZOB}$ | Output Low-Z Time Output Enable and Byte Enable(1,2) | 0 | — | 0 | — | 0 | — | ns |
| $t_{HZ}$ | Output High-Z Time(1,2) | 0 | 4 | 0 | 6 | 0 | 8 | ns |
| $t_{PU}$ | Chip Enable to Power Up Time(2) | 0 | — | 0 | — | 0 | — | ns |
| $t_{PD}$ | Chip Disable to Power Down Time(2) | — | 8 | — | 8 | — | 12 | ns |
| $t_{SOP}$ | Semaphore Flag Update Pulse ($\overline{OE}$ or $\overline{SEM}$) | — | 4 | — | 6 | — | 8 | ns |
| $t_{SAA}$ | Semaphore Address Access Time | 2 | 10 | 2 | 12 | 2 | 15 | ns |
| $t_{SOE}$ | Semaphore Output Enable Access Time | — | 5 | — | 6 | — | 7 | ns |

5679 tbl 12

## AC Electrical Characteristics Over the Operating Temperature and Supply Voltage(4)

| Symbol | Parameter | 70T653MS10 Com'l Only | | 70T653MS12 Com'l & Ind | | 70T653MS15 Com'l Only | | Unit |
|---|---|---|---|---|---|---|---|---|
| | | Min. | Max. | Min. | Max. | Min. | Max. | |
| **WRITE CYCLE** | | | | | | | | |
| $t_{WC}$ | Write Cycle Time | 10 | — | 12 | — | 15 | — | ns |
| $t_{EW}$ | Chip Enable to End-of-Write(3) | 7 | — | 9 | — | 12 | — | ns |
| $t_{AW}$ | Address Valid to End-of-Write | 7 | — | 9 | — | 12 | — | ns |
| $t_{AS}$ | Address Set-up Time(3) | 0 | — | 0 | — | 0 | — | ns |
| $t_{WP}$ | Write Pulse Width | 7 | — | 9 | — | 12 | — | ns |
| $t_{WR}$ | Write Recovery Time | 0 | — | 0 | — | 0 | — | ns |
| $t_{DW}$ | Data Valid to End-of-Write | 5 | — | 7 | — | 10 | — | ns |
| $t_{DH}$ | Data Hold Time | 0 | — | 0 | — | 0 | — | ns |
| $t_{WZ}$ | Write Enable to Output in High-Z(1,2) | — | 4 | — | 6 | — | 8 | ns |
| $t_{OW}$ | Output Active from End-of-Write(1,2) | 3 | — | 3 | — | 3 | — | ns |
| $t_{SWRD}$ | $\overline{SEM}$ Flag Write to Read Time | 5 | — | 5 | — | 5 | — | ns |
| $t_{SPS}$ | $\overline{SEM}$ Flag Contention Window | 5 | — | 5 | — | 5 | — | ns |

5679 tbl 13

**NOTES:**

1. Transition is measured 0mV from Low or High-impedance voltage with Output Test Load (Figure 1).
2. This parameter is guaranteed by device characterization, but is not production tested.
3. To access RAM, $\overline{CE}$= $V_{IL}$ and $\overline{SEM}$ = $V_{IH}$. To access semaphore, $\overline{CE}$ = $V_{IH}$ and $\overline{SEM}$ = $V_{IL}$. Either condition must be valid for the entire $t_{EW}$ time. $\overline{CE}$ = $V_{IL}$ when $\overline{CE}_0$ = $V_{IL}$ and $CE_1$ = $V_{IH}$. $\overline{CE}$ = $V_{IH}$ when $\overline{CE}_0$ = $V_{IH}$ and/or $CE_1$ = $V_{IL}$.
4. These values are valid regardless of the power supply level selected for I/O and control signals (3.3V/2.5V). See page 6 for details.



© 2019 Renesas Electronics Corporation

## Waveform of Read Cycles(4)

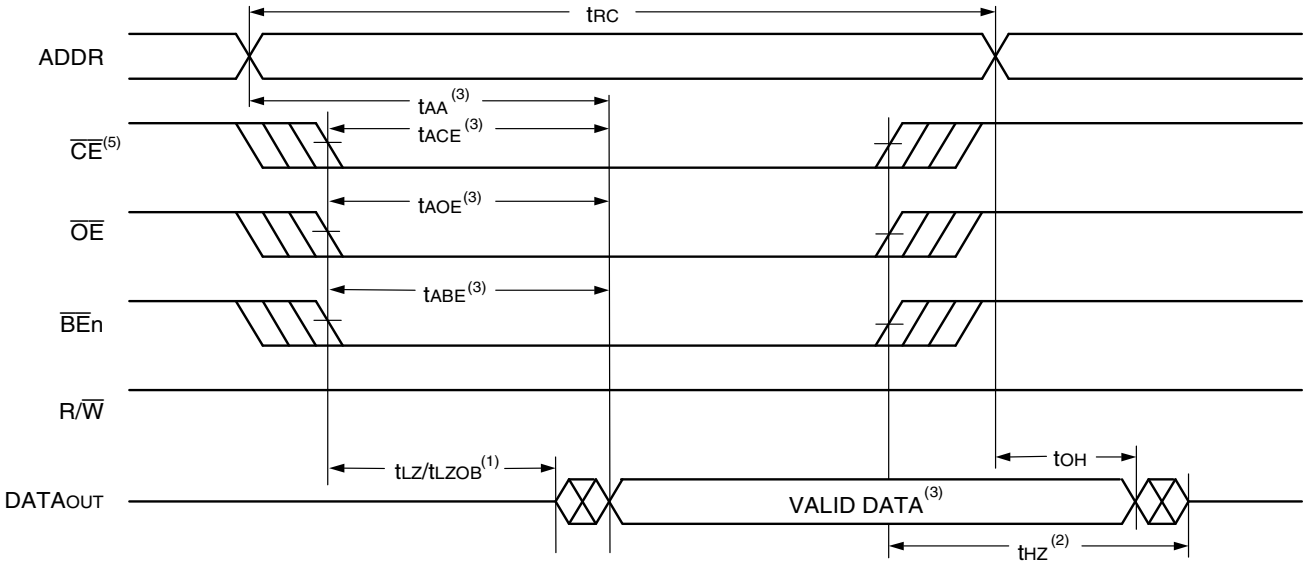


5679 drw 06

**NOTES:**
1. Timing depends on which signal is asserted last, $\overline{OE}$, $\overline{CE}$ or $\overline{BE}n$.
2. Timing depends on which signal is de-asserted first $\overline{CE}$, $\overline{OE}$ or $\overline{BE}n$.
3. Start of valid data depends on which timing becomes effective last $t_{AOE}$, $t_{ACE}$, $t_{AA}$ or $t_{ABE}$.
4. $\overline{SEM}$ = $V_{IH}$.
5. $\overline{CE}$ = L occurs when $\overline{CE}_0$ = $V_{IL}$ and $CE_1$ = $V_{IH}$. $\overline{CE}$ = H when $\overline{CE}_0$ = $V_{IH}$ and/or $CE_1$ = $V_{IL}$.

## Timing of Power-Up Power-Down

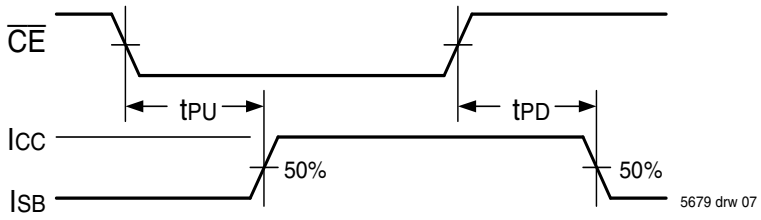


5679 drw 07



© 2019 Renesas Electronics Corporation

## Timing Waveform of Write Cycle No. 1, R/$\overline{W}$ Controlled Timing(1,5,8)

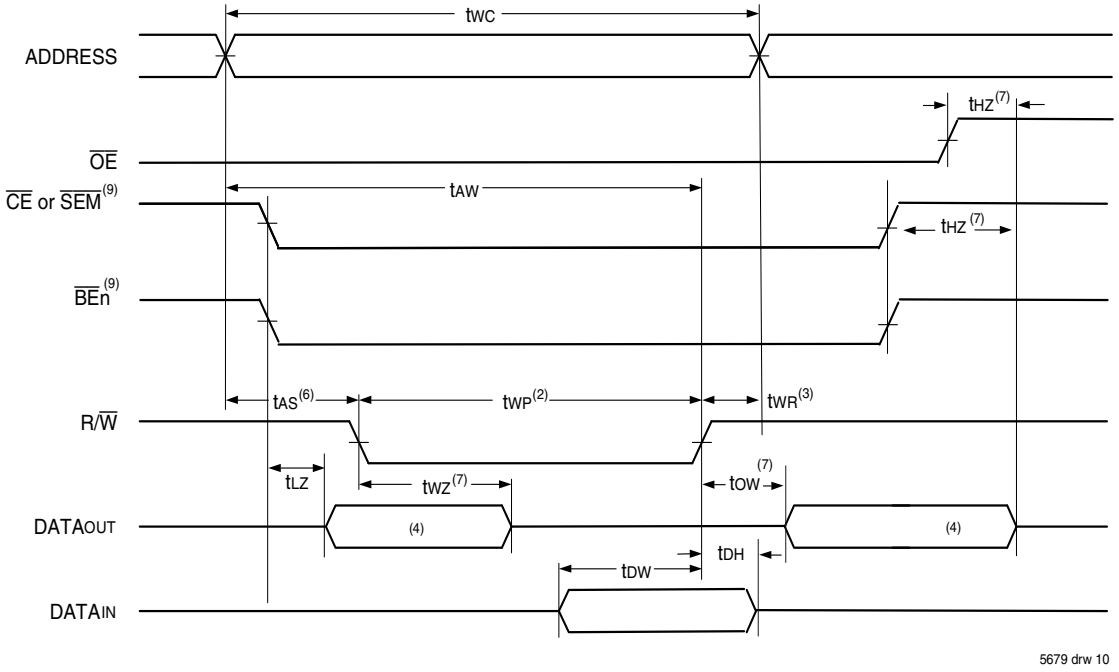


## Timing Waveform of Write Cycle No. 2, $\overline{CE}$ Controlled Timing(1,5,8)

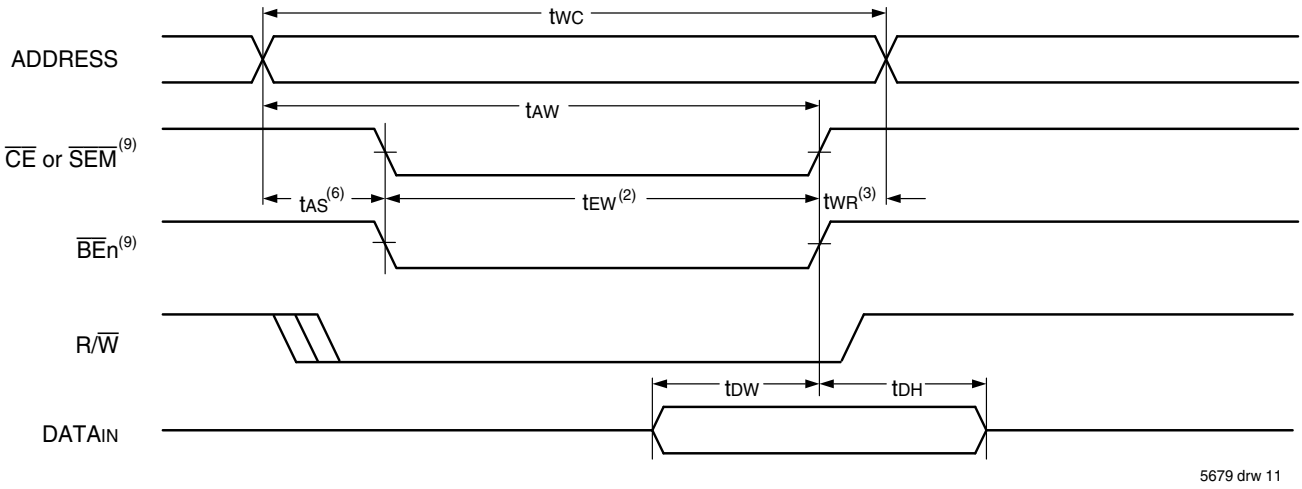


**NOTES:**

1. R/$\overline{W}$ or $\overline{CE}$ or $\overline{BE}$n = $V_{IH}$ during all address transitions for Write Cycles 1 and 2.
2. A write occurs during the overlap ($t_{EW}$ or $t_{WP}$) of a $\overline{CE}$ = $V_{IL}$, $\overline{BE}$n = $V_{IL}$, and a R/$\overline{W}$ = $V_{IL}$ for memory array writing cycle.
3. $t_{WR}$ is measured from the earlier of $\overline{CE}$, $\overline{BE}$n or R/$\overline{W}$ (or $\overline{SEM}$ or R/$\overline{W}$) going HIGH to the end of write cycle.
4. During this period, the I/O pins are in the output state and input signals must not be applied.
5. If the $\overline{CE}$ or $\overline{SEM}$ = $V_{IL}$ transition occurs simultaneously with or after the R/$\overline{W}$ = $V_{IL}$ transition, the outputs remain in the High-impedance state.
6. Timing depends on which enable signal is asserted last, $\overline{CE}$ or R/$\overline{W}$.
7. This parameter is guaranteed by device characterization, but is not production tested. Transition is measured 0mV from steady state with the Output Test Load (Figure 1).
8. If $\overline{OE}$ = $V_{IL}$ during R/$\overline{W}$ controlled write cycle, the write pulse width must be the larger of $t_{WP}$ or ($t_{WZ}$ + $t_{DW}$) to allow the I/O drivers to turn off and data to be placed on the bus for the required $t_{DW}$. If $\overline{OE}$ = $V_{IH}$ during an R/$\overline{W}$ controlled write cycle, this requirement does not apply and the write pulse can be as short as the specified $t_{WP}$.
9. To access RAM, $\overline{CE}$ = $V_{IL}$ and $\overline{SEM}$ = $V_{IH}$. To access semaphore, $\overline{CE}$ = $V_{IH}$ and $\overline{SEM}$ = $V_{IL}$. $t_{EW}$ must be met for either condition. $\overline{CE}$ = $V_{IL}$ when $\overline{CE}_0$ = $V_{IL}$ and $CE_1$ = $V_{IH}$. $\overline{CE}$ = $V_{IH}$ when $\overline{CE}_0$ = $V_{IH}$ and/or $CE_1$ = $V_{IL}$.



© 2019 Renesas Electronics Corporation

## RapidWrite Mode Write Cycle

Unlike other vendors' Asynchronous Random Access Memories, the IDT70T653M is capable of performing multiple back-to-back write operations without having to pulse the R/$\overline{W}$, $\overline{CE}$, or $\overline{BE}$n signals high during address transitions. This RapidWrite Mode functionality allows the system designer to achieve optimum back-to-back write cycle performance without the difficult task of generating narrow reset pulses every cycle, simplifying system design and reducing time to market.

During this new RapidWrite Mode, the end of the write cycle is now defined by the ending address transition, instead of the R/$\overline{W}$ or $\overline{CE}$ or $\overline{BE}$n transition to the inactive state. R/$\overline{W}$, $\overline{CE}$, and $\overline{BE}$n can be held active throughout the address transition between write cycles. Care must be taken to still meet the Write Cycle time ($t_{WC}$), the time in which the Address inputs must be stable. Input data setup and hold times ($t_{DW}$ and $t_{DH}$) will now be referenced to the ending address transition. In this RapidWrite Mode the I/O will remain in the Input mode for the duration of the operations due to R/$\overline{W}$ being held low. All standard Write Cycle specifications must be adhered to. However, $t_{AS}$ and $t_{WR}$ are only applicable when switching between read and write operations. Also, there are two additional conditions on the Address Inputs that must also be met to ensure correct address controlled writes. These specifications, the Allowable Address Skew ($t_{AAS}$) and the Address Rise/Fall time ($t_{ARF}$), must be met to use the RapidWrite Mode. If these conditions are not met there is the potential for inadvertent write operations at random intermediate locations as the device transitions between the desired write addresses.

## Timing Waveform of Write Cycle No. 3, RapidWrite Mode Write Cycle(1,3)

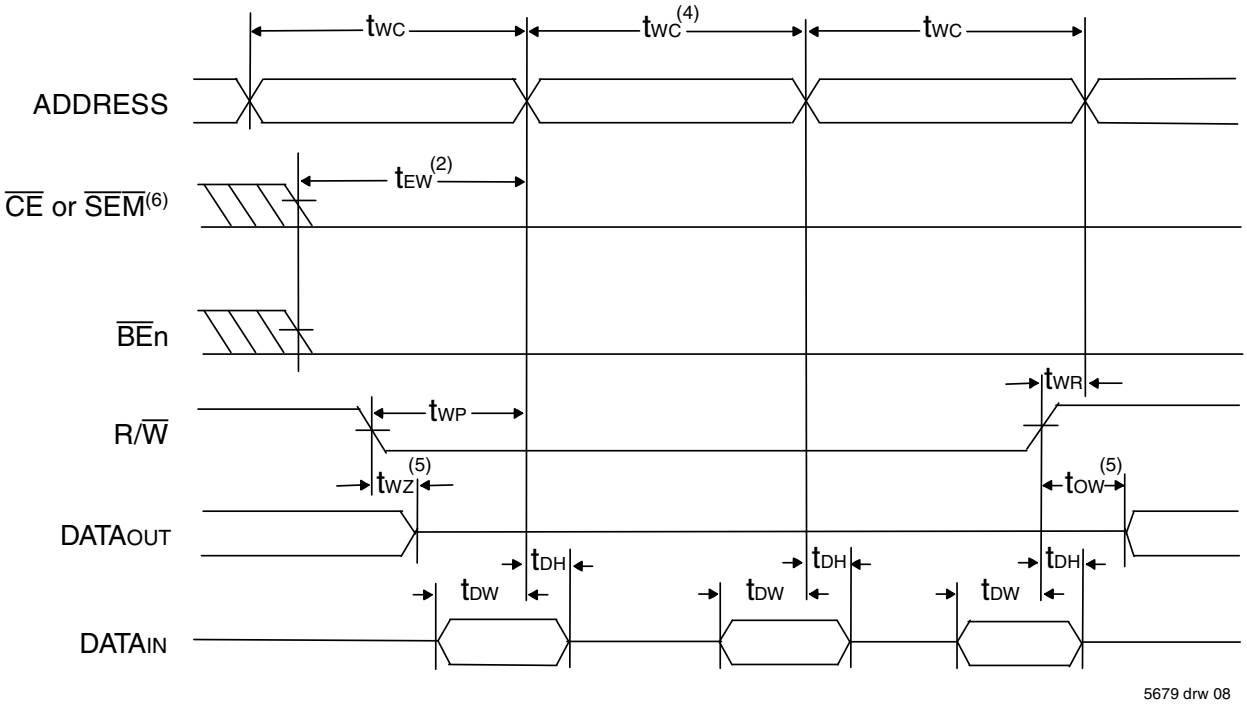


**NOTES:**

1. $\overline{OE}$ = $V_{IL}$ for this timing waveform as shown. $\overline{OE}$ may equal $V_{IH}$ with same write functionality; I/O would then always be in High-Z state.
2. A write occurs during the overlap ($t_{EW}$ or $t_{WP}$) of a $\overline{CE}$ = $V_{IL}$, $\overline{BE}$n = $V_{IL}$, and a R/$\overline{W}$ = $V_{IL}$ for memory array writing cycle. The last transition LOW of $\overline{CE}$, $\overline{BE}$n, and R/$\overline{W}$ initiates the write sequence. The first transition HIGH of $\overline{CE}$, $\overline{BE}$n, and R/$\overline{W}$ terminates the write sequence.
3. If the $\overline{CE}$ or $\overline{SEM}$ = $V_{IL}$ transition occurs simultaneously with or after the R/$\overline{W}$ = $V_{IL}$ transition, the outputs remain in the High-impedance state.
4. The timing represented in this cycle can be repeated multiple times to execute sequential RapidWrite Mode writes.
5. This parameter is guaranteed by device characterization, but is not production tested. Transition is measured 0mV from steady state with the Output Test Load (Figure 1).
6. To access RAM, $\overline{CE}$ = $V_{IL}$ and $\overline{SEM}$ = $V_{IH}$. To access semaphore, $\overline{CE}$ = $V_{IH}$ and $\overline{SEM}$ = $V_{IL}$. $t_{EW}$ must be met for either condition. $\overline{CE}$ = $V_{IL}$ when $\overline{CE}_0$ = $V_{IL}$ and $CE_1$ = $V_{IH}$. $\overline{CE}$ = $V_{IH}$ when $\overline{CE}_0$ = $V_{IH}$ and/or $CE_1$ = $V_{IL}$.



© 2019 Renesas Electronics Corporation

## AC Electrical Characteristics over the Operating Temperature Range and Supply Voltage Range for RapidWrite Mode Write Cycle(1)

| Symbol | Parameter | Min | Max | Unit |
|---|---|---|---|---|
| $t_{AAS}$ | Allowable Address Skew for RapidWrite Mode | — | 1 | ns |
| $t_{ARF}$ | Address Rise/Fall Time for RapidWrite Mode | 1.5 | — | V/ns |

5679 tbl 14

**NOTE:**
1. Timing applies to all speed grades when utilizing the RapidWrite Mode Write Cycle.

## Timing Waveform of Address Inputs for RapidWrite Mode Write Cycle

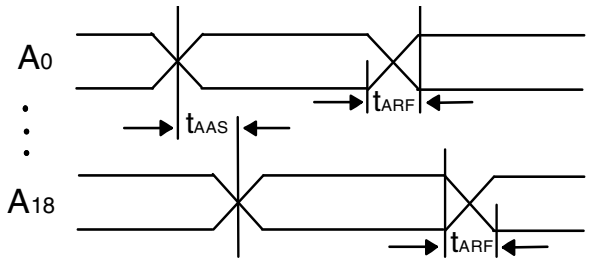


5679 drw 09



© 2019 Renesas Electronics Corporation

## Timing Waveform of Semaphore Read after Write Timing, Either Side(1)

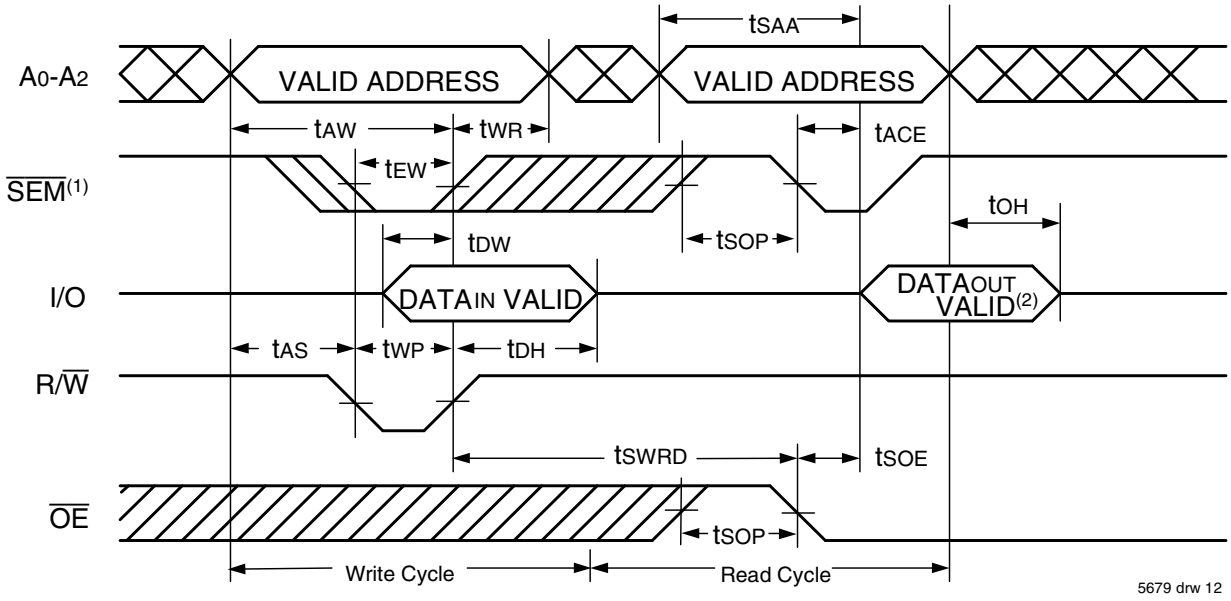


**NOTES:**
1. $\overline{CE_0}$ = $V_{IH}$ and $CE_1$ = $V_{IL}$ are required for the duration of both the write cycle and the read cycle waveforms shown above. Refer to Truth Table II for details and for appropriate $\overline{BE}$n controls.
2. "$DATA_{OUT}$ VALID" represents all I/O's ($I/O_0$ - $I/O_8$ and $I/O_{18}$ - $I/O_{26}$) equal to the semaphore value.

## Timing Waveform of Semaphore Write Contention(1,3,4)

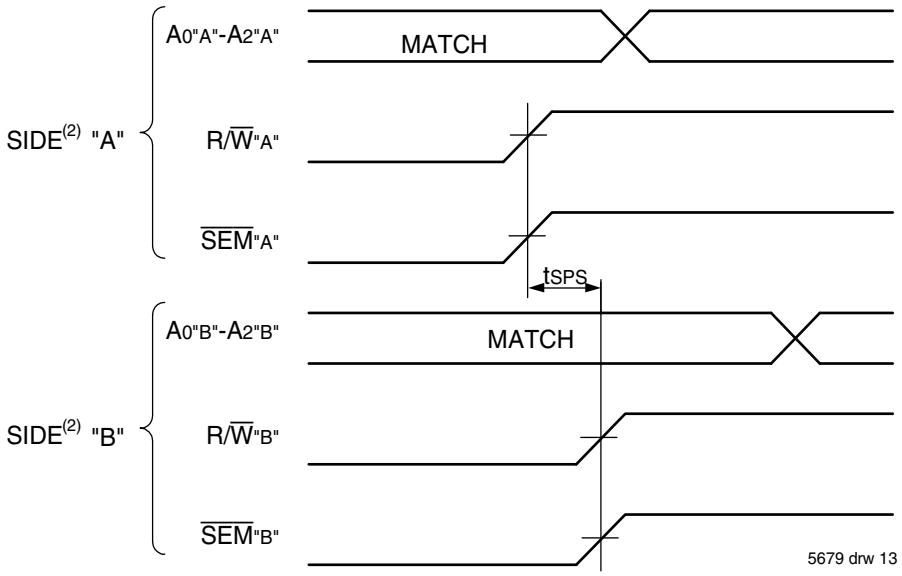


**NOTES:**
1. $D_{OR}$ = $D_{OL}$ = $V_{IL}$, $\overline{CE_L}$ = $\overline{CE_R}$ = $V_{IH}$. Refer to Truth Table II for appropriate $\overline{BE}$ controls.
2. All timing is the same for left and right ports. Port "A" may be either left or right port. "B" is the opposite from port "A".
3. This parameter is measured from R/$\overline{W}$"A" or $\overline{SEM}$"A" going HIGH to R/$\overline{W}$"B" or $\overline{SEM}$"B" going HIGH.
4. If $t_{SPS}$ is not satisfied the semaphore will fall positively to one side or the other, but there is no guarantee which side will be granted the semaphore flag.



© 2019 Renesas Electronics Corporation

## AC Electrical Characteristics Over the Operating Temperature and Supply Voltage Range

| Symbol | Parameter | 70T653MS10 Com'l Only | | 70T653MS12 Com'l & Ind | | 70T653MS15 Com'l Only | | Unit |
|---|---|---|---|---|---|---|---|---|
| | | Min. | Max. | Min. | Max. | Min. | Max. | |
| **$\overline{BUSY}$ TIMING** | | | | | | | | |
| $t_{WB}$ | $\overline{BUSY}$ Input to Write[4] | 0 | — | 0 | — | 0 | — | ns |
| $t_{WH}$ | Write Hold After $\overline{BUSY}$[5] | 7 | — | 9 | — | 12 | — | ns |
| **PORT-TO-PORT DELAY TIMING** | | | | | | | | |
| $t_{WDD}$ | Write Pulse to Data Delay[1] | — | 14 | — | 16 | — | 20 | ns |
| $t_{DDD}$ | Write Data Valid to Read Data Delay[1] | — | 14 | — | 16 | — | 20 | ns |

5679 tbl 15

**NOTES:**
1. Port-to-port delay through RAM cells from writing port to reading port, refer to Timing Waveform of Write with Port-to-Port Read.
2. To ensure that the earlier of the two ports wins.
3. $t_{BDD}$ is a calculated parameter and is the greater of the Max. spec, $t_{WDD} - t_{WP}$ (actual), or $t_{DDD} - t_{DW}$ (actual).
4. To ensure that the write cycle is inhibited on port "B" during contention on port "A".
5. To ensure that a write cycle is completed on port "B" after contention on port "A".

## AC Electrical Characteristics Over the Operating Temperature and Supply Voltage Range[1,2,3]

| Symbol | Parameter | 70T65M3S10 Com'l Only | | 70T653MS12 Com'l & Ind | | 70T6539MS15 Com'l Only | |
|---|---|---|---|---|---|---|---|
| | | Min. | Max. | Min. | Max. | Min. | Max. |
| **SLEEP MODE TIMING ($ZZ_x$=$V_{IH}$)** | | | | | | | |
| $t_{ZZS}$ | Sleep Mode Set Time | 10 | — | 12 | — | 15 | — |
| $t_{ZZR}$ | Sleep Mode Reset Time | 10 | — | 12 | — | 15 | — |
| $t_{ZZPD}$ | Sleep Mode Power Down Time[4] | 10 | — | 12 | — | 15 | — |
| $t_{ZZPU}$ | Sleep Mode Power Up Time[4] | — | 0 | — | 0 | — | 0 |

5679 tbl 15a

**NOTES:**
1. Timing is the same for both ports.
2. The sleep mode pin shuts off all dynamic inputs, except JTAG inputs, when asserted. OPTx, $\overline{INT}$x and the sleep mode pins themselves (ZZx) are not affected during sleep mode. It is recommended that boundary scan not be operated during sleep mode.
3. These values are valid regardless of the power supply level selected for I/O and control signals (3.3V/2.5V). See page 6 for details.
4. This parameter is guaranteed by device characterization, but is not production tested.



© 2019 Renesas Electronics Corporation

## Timing Waveform of Write with Port-to-Port Read(1,3)

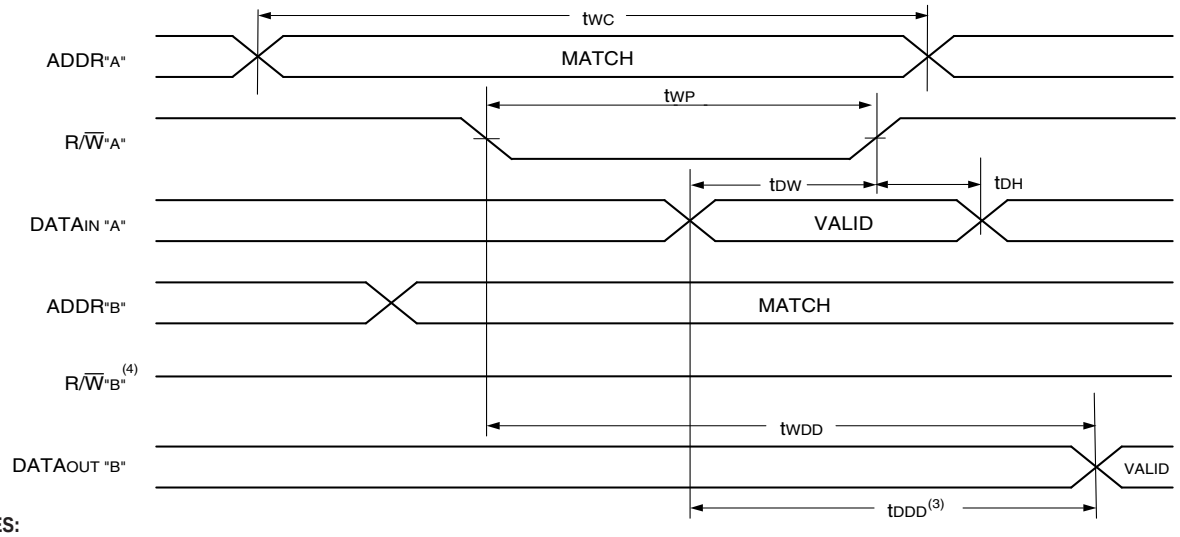


5679 drw 14a

**NOTES:**
1. $\overline{CE}_{0L}$ = $\overline{CE}_{0R}$ = $V_{IL}$; $CE_{1L}$ = $CE_{1R}$ = $V_{IH}$.
2. $\overline{OE}$ = $V_{IL}$ for the reading port.
3. All timing is the same for left and right ports. Port "A" may be either the left or right port. Port "B" is the port opposite from port "A".
4. R/$\overline{W}_B$ = $V_{IH}$.

## Timing Waveform of Write with $\overline{BUSY}$

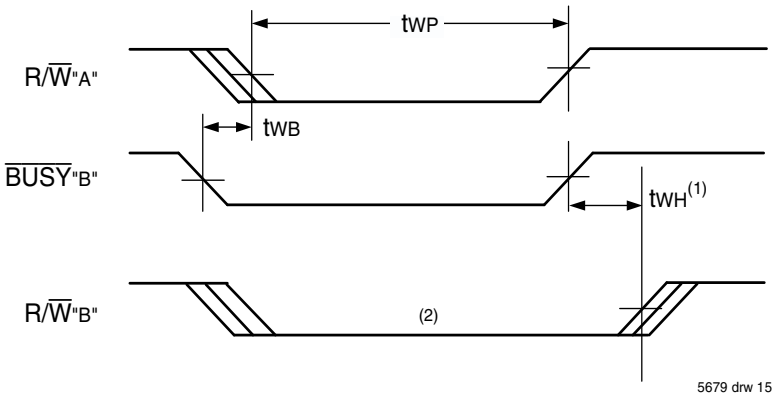


5679 drw 15

**NOTES:**
1. $t_{WH}$ must be met for $\overline{BUSY}$ input.
2. $\overline{BUSY}$ is asserted on port "B" blocking R/$\overline{W}$"B", until $\overline{BUSY}$"B" goes HIGH.

## AC Electrical Characteristics Over the Operating Temperature and Supply Voltage Range(1,2)

| | | 70T653MS10 Com'l Only | | 70T653MS12 Com'l & Ind | | 70T653MS15 Com'l Only | | |
|---|---|---|---|---|---|---|---|---|
| **Symbol** | **Parameter** | **Min.** | **Max.** | **Min.** | **Max.** | **Min.** | **Max.** | **Unit** |
| **INTERRUPT TIMING** | | | | | | | | |
| $t_{AS}$ | Address Set-up Time | 0 | — | 0 | — | 0 | — | ns |
| $t_{WR}$ | Write Recovery Time | 0 | — | 0 | — | 0 | — | ns |
| $t_{INS}$ | Interrupt Set Time | — | 10 | — | 12 | — | 15 | ns |
| $t_{INR}$ | Interrupt Reset Time | — | 10 | — | 12 | — | 15 | ns |

5679 tbl 16

**NOTES:**
1. Timing is the same for both ports.
2. These values are valid regardless of the power supply level selected for I/O and control signals (3.3V/2.5V). See page 6 for details.



© 2019 Renesas Electronics Corporation

## Waveform of Interrupt Timing(1)

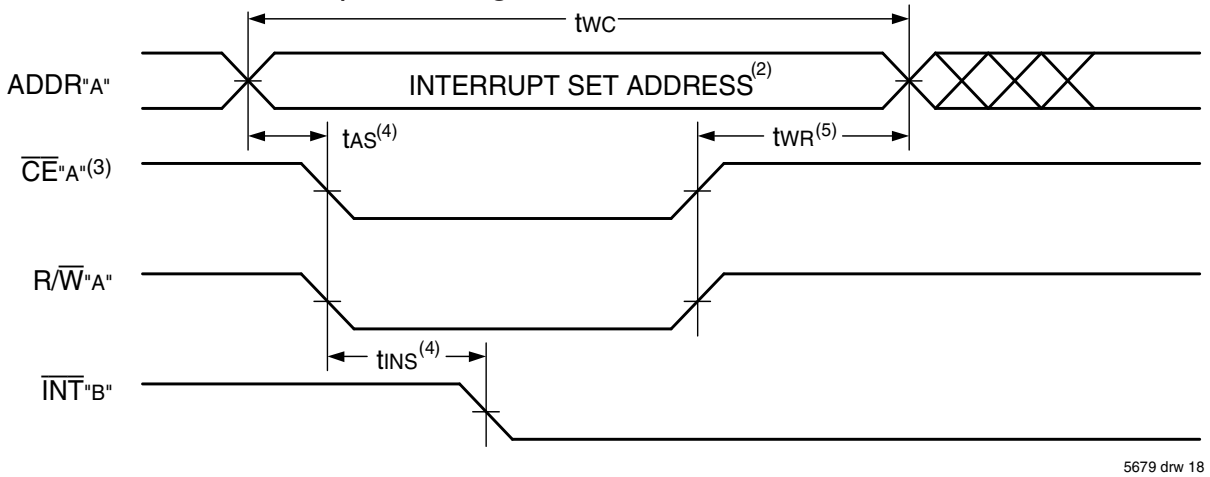


5679 drw 18

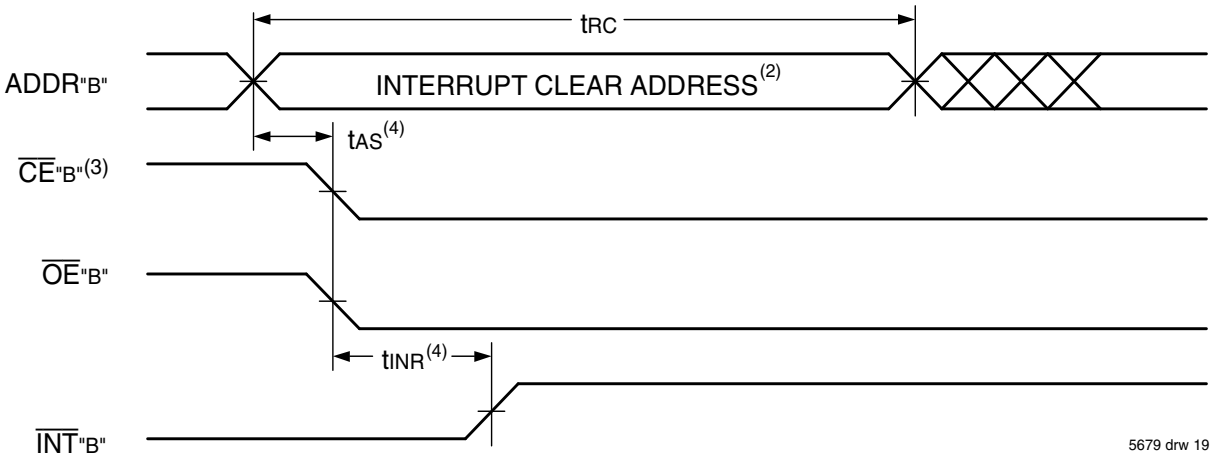


5679 drw 19

**NOTES:**
1. All timing is the same for left and right ports. Port "A" may be either the left or right port. Port "B" is the port opposite from port "A".
2. Refer to Interrupt Truth Table.
3. $\overline{CE}_X$ = $V_{IL}$ means $\overline{CE}_{0X}$ = $V_{IL}$ and $CE_{1X}$ = $V_{IH}$. $\overline{CE}_X$ = $V_{IH}$ means $\overline{CE}_{0X}$ = $V_{IH}$ and/or $CE_{1X}$ = $V_{IL}$.
4. Timing depends on which enable signal ($\overline{CE}$ or R/$\overline{W}$) is asserted last.
5. Timing depends on which enable signal ($\overline{CE}$ or R/$\overline{W}$) is de-asserted first.

## Truth Table III — Interrupt Flag(1,4)

| Left Port | | | | | Right Port | | | | | |
|---|---|---|---|---|---|---|---|---|---|---|
| R/$\overline{W}_L$ | $\overline{CE}_L$ | $\overline{OE}_L$ | $A_{18L}$-$A_{0L}$ | $\overline{INT}_L$ | R/$\overline{W}_R$ | $\overline{CE}_R$ | $\overline{OE}_R$ | $A_{18R}$-$A_{0R}$ | $\overline{INT}_R$ | Function |
| L | L | X | 7FFFF | X | X | X | X | X | L(2) | Set Right $\overline{INT}_R$ Flag |
| X | X | X | X | X | X | L | L | 7FFFF | H(3) | Reset Right $\overline{INT}_R$ Flag |
| X | X | X | X | L(3) | L | L | X | 7FFFE | X | Set Left $\overline{INT}_L$ Flag |
| X | L | L | 7FFFE | H(2) | X | X | X | X | X | Reset Left $\overline{INT}_L$ Flag |

5679 tbl 17

**NOTES:**
1. Assumes $\overline{BUSY}_L$ = $\overline{BUSY}_R$ =$V_{IH}$. $\overline{CE}_{0X}$ = $V_{IL}$ and $CE_{1X}$ = $V_{IH}$.
2. If $\overline{BUSY}_L$ = $V_{IL}$, then no change.
3. If $\overline{BUSY}_R$ = $V_{IL}$, then no change.
4. $\overline{INT}_L$ and $\overline{INT}_R$ must be initialized at power-up.



© 2019 Renesas Electronics Corporation

## Truth Table IV — Example of Semaphore Procurement Sequence(1,2,3)

| Functions | $D_0$ - $D_8$ Left<br>$D_{18}$ - $D_{26}$ Left | $D_0$ - $D_8$ Right<br>$D_{18}$ - $D_{26}$ Right | Status |
|---|---|---|---|
| No Action | 1 | 1 | Semaphore free |
| Left Port Writes "0" to Semaphore | 0 | 1 | Left port has semaphore token |
| Right Port Writes "0" to Semaphore | 0 | 1 | No change. Right side has no write access to semaphore |
| Left Port Writes "1" to Semaphore | 1 | 0 | Right port obtains semaphore token |
| Left Port Writes "0" to Semaphore | 1 | 0 | No change. Left port has no write access to semaphore |
| Right Port Writes "1" to Semaphore | 0 | 1 | Left port obtains semaphore token |
| Left Port Writes "1" to Semaphore | 1 | 1 | Semaphore free |
| Right Port Writes "0" to Semaphore | 1 | 0 | Right port has semaphore token |
| Right Port Writes "1" to Semaphore | 1 | 1 | Semaphore free |
| Left Port Writes "0" to Semaphore | 0 | 1 | Left port has semaphore token |
| Left Port Writes "1" to Semaphore | 1 | 1 | Semaphore free |

5679 tbl 19

**NOTES:**
1. This table denotes a sequence of events for only one of the eight semaphores on the IDT70T653M.
2. There are eight semaphore flags written to via $I/O_0$ and read from I/Os ($I/O_0$-$I/O_8$ and $I/O_{18}$-$I/O_{26}$). These eight semaphores are addressed by $A_0$ - $A_2$.
3. $\overline{CE}$ = $V_{IH}$, $\overline{SEM}$ = $V_{IL}$ to access the semaphores. Refer to the Semaphore Read/Write Control Truth Table.

## Functional Description

The IDT70T653M provides two ports with separate control, address and I/O pins that permit independent access for reads or writes to any location in memory. The IDT70T653M has an automatic power down feature controlled by $\overline{CE}$. The $\overline{CE}_0$ and $CE_1$ control the on-chip power down circuitry that permits the respective port to go into a standby mode when not selected ($\overline{CE}$ = HIGH). When a port is enabled, access to the entire memory array is permitted.

## Interrupts

If the user chooses the interrupt function, a memory location (mail box or message center) is assigned to each port. The left port interrupt flag ($\overline{INT}_L$) is asserted when the right port writes to memory location 7FFFE (HEX), where a write is defined as $\overline{CE}_R$ = R/$\overline{W}_R$ = $V_{IL}$ per the Truth Table. The left port clears the interrupt through access of address location 7FFFE when $\overline{CE}_L$ = $\overline{OE}_L$ = $V_{IL}$, R/$\overline{W}$ is a "don't care". Likewise, the right port interrupt flag ($\overline{INT}_R$) is asserted when the left port writes to memory location 7FFFF (HEX) and to clear the interrupt flag ($\overline{INT}_R$), the right port must read the memory location 7FFFF. The message (36 bits) at 7FFFE or 7FFFF is user-defined since it is an addressable SRAM location. If the interrupt function is not used, address locations 7FFFE and 7FFFF are not used as mail boxes, but as part of the random access memory. Refer to Truth Table III for the interrupt operation.

## Busy Logic

The $\overline{BUSY}$ pin operates as a write inhibit input pin. Normal operation can be programmed by tying the $\overline{BUSY}$ pins HIGH. If desired, unintended write operations can be prevented to a port by tying the BUSY pin for that port LOW.

## Semaphores

The IDT70T653M is an extremely fast Dual-Port 512K x 36 CMOS Static RAM with an additional 8 address locations dedicated to binary semaphore flags. These flags allow either processor on the left or right side of the Dual-Port RAM to claim a privilege over the other processor for functions defined by the system designer's software. As an example, the semaphore can be used by one processor to inhibit the other from accessing a portion of the Dual-Port RAM or any other shared resource.

The Dual-Port RAM features a fast access time, with both ports being completely independent of each other. This means that the activity on the left port in no way slows the access time of the right port. Both ports are identical in function to standard CMOS Static RAM and can be read from or written to at the same time with the only possible conflict arising from the simultaneous writing of, or a simultaneous READ/WRITE of, a non-semaphore location. Semaphores are protected against such ambiguous situations and may be used by the system program to avoid any conflicts in the non-semaphore portion of the Dual-Port RAM. These devices have an automatic power-down feature controlled by $\overline{CE}_0$ and $CE_1$, the Dual-Port RAM chip enables, and $\overline{SEM}$, the semaphore enable. The $\overline{CE}_0$, $CE_1$, and $\overline{SEM}$ pins control on-chip power down circuitry that permits the respective port to go into standby mode when not selected.

Systems which can best use the IDT70T653M contain multiple processors or controllers and are typically very high-speed systems which are software controlled or software intensive. These systems can benefit from a performance increase offered by the IDT70T653Ms hardware semaphores, which provide a lockout mechanism without requiring complex programming.

Software handshaking between processors offers the maximum in system flexibility by permitting shared resources to be allocated in varying configurations. The IDT70T653M does not use its semaphore flags to control any resources through hardware, thus allowing the system designer total flexibility in system architecture.

An advantage of using semaphores rather than the more common methods of hardware arbitration is that wait states are never incurred in either processor. This can prove to be a major advantage in very high-speed systems.



© 2019 Renesas Electronics Corporation

## How the Semaphore Flags Work

The semaphore logic is a set of eight latches which are independent of the Dual-Port RAM. These latches can be used to pass a flag, or token, from one port to the other to indicate that a shared resource is in use. The semaphores provide a hardware assist for a use assignment method called "Token Passing Allocation." In this method, the state of a semaphore latch is used as a token indicating that a shared resource is in use. If the left processor wants to use this resource, it requests the token by setting the latch. This processor then verifies its success in setting the latch by reading it. If it was successful, it proceeds to assume control over the shared resource. If it was not successful in setting the latch, it determines that the right side processor has set the latch first, has the token and is using the shared resource. The left processor can then either repeatedly request that semaphore's status or remove its request for that semaphore to perform another task and occasionally attempt again to gain control of the token via the set and test sequence. Once the right side has relinquished the token, the left side should succeed in gaining control.

The semaphore flags are active LOW. A token is requested by writing a zero into a semaphore latch and is released when the same side writes a one to that latch.

The eight semaphore flags reside within the IDT70T653M in a separate memory space from the Dual-Port RAM. This address space is accessed by placing a low input on the $\overline{SEM}$ pin (which acts as a chip select for the semaphore flags) and using the other control pins (Address, $\overline{CE}_0$, $CE_1$,R/$\overline{W}$ and $\overline{BE}$n) as they would be used in accessing a standard Static RAM. Each of the flags has a unique address which can be accessed by either side through address pins $A_0 – A_2$. When accessing the semaphores, none of the other address pins has any effect.

When writing to a semaphore, only data pin $D_0$ is used. If a low level is written into an unused semaphore location, that flag will be set to a zero on that side and a one on the other side (see Truth Table IV). That semaphore can now only be modified by the side showing the zero. When a one is written into the same location from the same side, the flag will be set to a one for both sides (unless a semaphore request from the other side is pending) and then can be written to by both sides. The fact that the side which is able to write a zero into a semaphore subsequently locks out writes from the other side is what makes semaphore flags useful in interprocessor communications. (A thorough discussion on the use of this feature follows shortly.) A zero written into the same location from the other side will be stored in the semaphore request latch for that side until the semaphore is freed by the first side.

When a semaphore flag is read, its value is spread into all data bits so that a flag that is a one reads as a one in all data bits and a flag containing a zero reads as all zeros for a semaphore read, the $\overline{SEM}$, $\overline{BE}$n, and $\overline{OE}$ signals need to be active. (Please refer to Truth Table II). Furthermore, the read value is latched into one side's output register when that side's semaphore select ($\overline{SEM}$, $\overline{BE}$n) and output enable ($\overline{OE}$) signals go active. This serves to disallow the semaphore from changing state in the middle of a read cycle due to a write cycle from the other side.

A sequence WRITE/READ must be used by the semaphore in order to guarantee that no system level contention will occur. A processor requests access to shared resources by attempting to write a zero into a semaphore location. If the semaphore is already in use, the semaphore request latch will contain a zero, yet the semaphore flag will appear as one, a fact which the processor will verify by the subsequent read (see Table IV). As an example, assume a processor writes a zero to the left port at a free semaphore location. On a subsequent read, the processor will verify that it has written successfully to that location and will assume control over the resource in question. Meanwhile, if a processor on the right side attempts to write a zero to the same semaphore flag it will fail, as will be verified by the fact that a one will be read from that semaphore on the right side during subsequent read. Had a sequence of READ/WRITE been used instead, system contention problems could have occurred during the gap between the read and write cycles.

It is important to note that a failed semaphore request must be followed by either repeated reads or by writing a one into the same location. The reason for this is easily understood by looking at the simple logic diagram

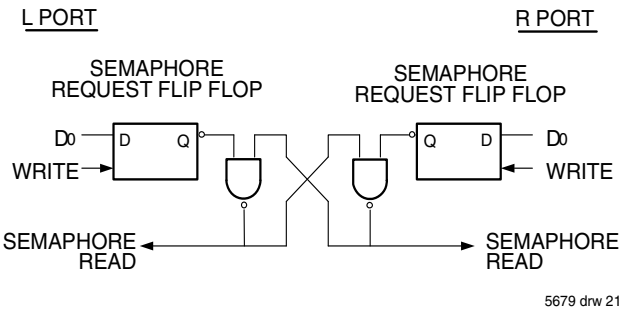


**Figure 4. IDT70T653M Semaphore Logic**

of the semaphore flag in Figure 4. Two semaphore request latches feed into a semaphore flag. Whichever latch is first to present a zero to the semaphore flag will force its side of the semaphore flag LOW and the other side HIGH. This condition will continue until a one is written to the same semaphore request latch. If the opposite side semaphore request latch has been written to zero in the meantime, the semaphore flag will flip over to the other side as soon as a one is written into the first request latch. The opposite side flag will now stay LOW until its semaphore request latch is written to a one. From this it is easy to understand that, if a semaphore is requested and the processor which requested it no longer needs the resource, the entire system can hang up until a one is written into that semaphore request latch.

The critical case of semaphore timing is when both sides request a single token by attempting to write a zero into it at the same time. The semaphore logic is specially designed to resolve this problem. If simultaneous requests are made, the logic guarantees that only one side receives the token. If one side is earlier than the other in making the request, the first side to make the request will receive the token. If both requests arrive at the same time, the assignment will be arbitrarily made to one port or the other.

One caution that should be noted when using semaphores is that semaphores alone do not guarantee that access to a resource is secure. As with any powerful programming technique, if semaphores are misused or misinterpreted, a software error can easily happen.

Initialization of the semaphores is not automatic and must be handled via the initialization program at power-up. Since any semaphore request flag which contains a zero must be reset to a one, all semaphores on both sides should have a one written into them at initialization from both sides to assure that they will be free when needed.



© 2019 Renesas Electronics Corporation

## Timing Waveform of Sleep Mode(1,2)

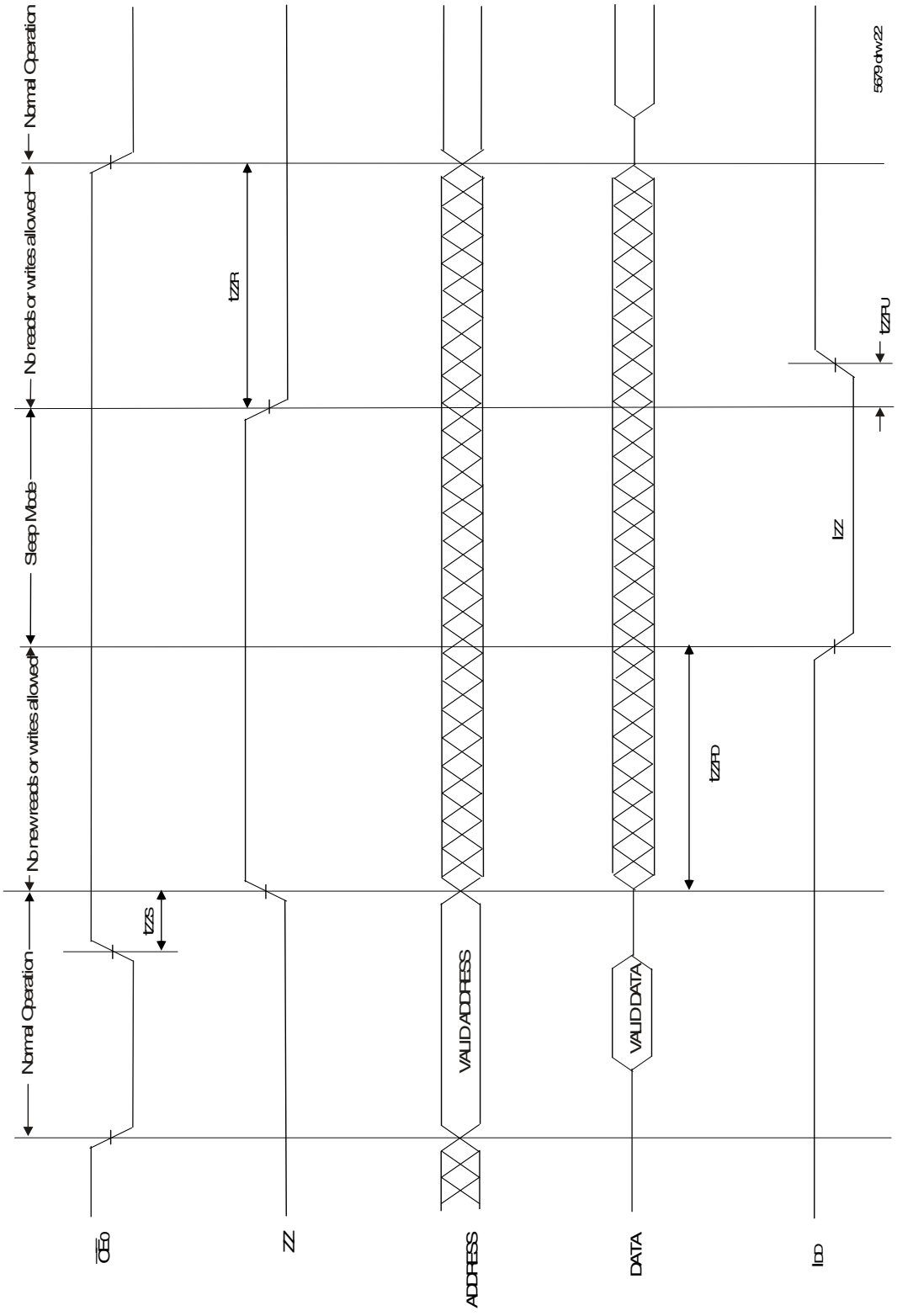


**NOTES:**
1. $\overline{CE}_1 = V_{IH}$.
2. All timing is same for Left and Right ports.



© 2019 Renesas Electronics Corporation

## Sleep Mode

The IDT70T653M is equipped with an optional sleep or low power mode on both ports. The sleep mode pin on both ports is active high. During normal operation, the ZZ pin is pulled low. When ZZ is pulled high, the port will enter sleep mode where it will meet lowest possible power conditions. The sleep mode timing diagram shows the modes of operation: Normal Operation, No Read/Write Allowed and Sleep Mode.

For a period of time prior to sleep mode and after recovering from sleep mode ($t_{ZZS}$ and $t_{ZZR}$), new reads or writes are not allowed. If a write or read operation occurs during these periods, the memory array may be corrupted. Validity of data out from the RAM cannot be guaranteed immediately after ZZ is asserted (prior to being in sleep).

During sleep mode the RAM automatically deselects itself. The RAM disconnects its internal buffer. All outputs will remain in high-Z state while in sleep mode. All inputs are allowed to toggle. The RAM will not be selected and will not perform any reads or writes.

## JTAG Functionality and Configuration

The IDT70T653M is composed of two independent memory arrays, and thus cannot be treated as a single JTAG device in the scan chain. The two arrays (A and B) each have identical characteristics and commands but must be treated as separate entities in JTAG operations. Please refer to Figure 5.

JTAG signaling must be provided serially to each array and utilizes the information provided in the Identification Register Definitions, Scan Register Sizes, and System Interface Parameter tables. Specifically, commands for Array B must precede those for Array A in any JTAG operations sent to the IDT70T653M. Please reference Application Note AN-411, "JTAG Testing of Multichip Modules" for specific instructions on performing JTAG testing on the IDT70T653M. AN-411 is available at www.idt.com.

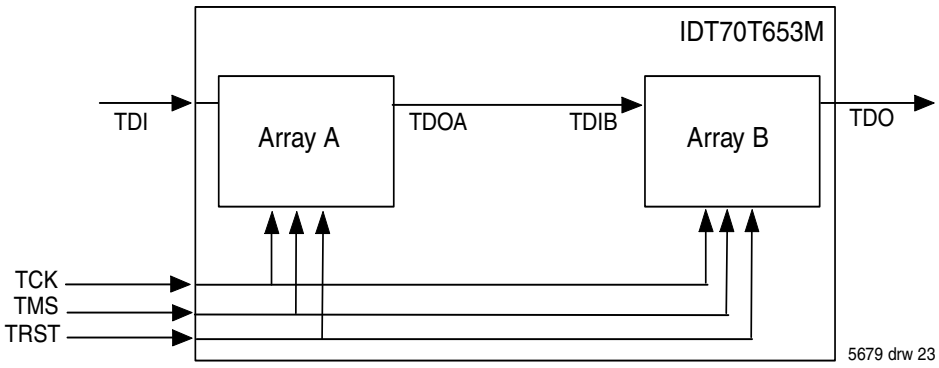


**Figure 5. JTAG Configuration for IDT70T653M**



© 2019 Renesas Electronics Corporation

## JTAG Timing Specifications

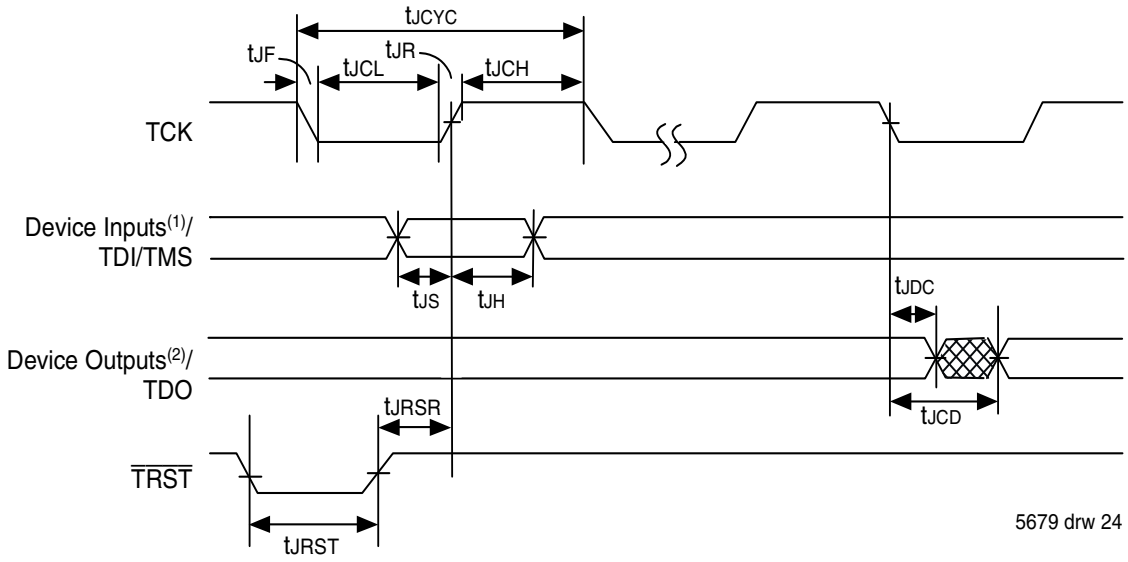


**NOTES:**
1. Device inputs = All device inputs except TDI, TMS, TCK and $\overline{TRST}$.
2. Device outputs = All device outputs except TDO.

## JTAG AC Electrical Characteristics(1,2,3,4,5)

| Symbol | Parameter | 70T653M | | |
|---|---|---|---|---|
| | | Min. | Max. | Units |
| tJCYC | JTAG Clock Input Period | 100 | — | ns |
| tJCH | JTAG Clock HIGH | 40 | — | ns |
| tJCL | JTAG Clock Low | 40 | — | ns |
| tJR | JTAG Clock Rise Time | — | 3(1) | ns |
| tJF | JTAG Clock Fall Time | — | 3(1) | ns |
| tJRST | JTAG Reset | 50 | — | ns |
| tJRSR | JTAG Reset Recovery | 50 | — | ns |
| tJCD | JTAG Data Output | — | 25 | ns |
| tJDC | JTAG Data Output Hold | 0 | — | ns |
| tJS | JTAG Setup | 15 | — | ns |
| tJH | JTAG Hold | 15 | — | ns |

5679 tbl 20

**NOTES:**
1. Guaranteed by design.
2. 30pF loading on external output signals.
3. Refer to AC Electrical Test Conditions stated earlier in this document.
4. JTAG operations occur at one speed (10MHz). The base device may run at any speed specified in this datasheet.
5. JTAG cannot be tested in sleep mode.



© 2019 Renesas Electronics Corporation

## Identification Register Definitions

| Instruction Field Array B | Value Array B | Instruction Field Array A | Value Array A | Description |
|---|---|---|---|---|
| Revision Number (31:28) | 0x0 | Revision Number (63:60) | 0x0 | Reserved for Version number |
| IDT Device ID (27:12) | 0x33B | IDT Device ID (59:44) | 0x33B | Defines IDT Part number |
| IDT JEDEC ID (11:1) | 0x33 | IDT JEDEC ID (43:33) | 0x33 | Allows unique identification of device vendor as IDT |
| ID Register Indicator Bit (Bit 0) | 1 | ID Register Indicator Bit (Bit 32) | 1 | Indicates the presence of an ID Register |

5679 tbl 21

## Scan Register Sizes

| Register Name | Bit Size Array A | Bit Size Array B | Bit Size 70T653M |
|---|---|---|---|
| Instruction (IR) | 4 | 4 | 8 |
| Bypass (BYR) | 1 | 1 | 2 |
| Identification (IDR) | 32 | 32 | 64 |
| Boundary Scan (BSR) | Note (3) | Note (3) | Note (3) |

5679 tbl 22

## System Interface Parameters

| Instruction | Code | Description |
|---|---|---|
| EXTEST | 00000000 | Forces contents of the boundary scan cells onto the device outputs[1]. Places the boundary scan register (BSR) between TDI and TDO. |
| BYPASS | 11111111 | Places the bypass register (BYR) between TDI and TDO. |
| IDCODE | 00100010 | Loads the ID register (IDR) with the vendor ID code and places the register between TDI and TDO. |
| HIGHZ | 01000100 | Places the bypass register (BYR) between TDI and TDO. Forces all device output drivers to a High-Z state. |
| CLAMP | 00110011 | Uses BYR. Forces contents of the boundary scan cells onto the device outputs. Places the bypass register (BYR) between TDI and TDO. |
| SAMPLE/PRELOAD | 00010001 | Places the boundary scan register (BSR) between TDI and TDO. SAMPLE allows data from device inputs[2] and outputs[1] to be captured in the boundary scan cells and shifted serially through TDO. PRELOAD allows data to be input serially into the boundary scan cells via the TDI. |
| RESERVED | All Other Codes | Several combinations are reserved. Do not use codes other than those identified above. |

5679 tbl 23

**NOTES:**
1. Device outputs = All device outputs except TDO.
2. Device inputs = All device inputs except TDI, TMS, TCK and $\overline{\text{TRST}}$.
3. The Boundary Scan Descriptive Language (BSDL) file for this device is available on the IDT website (www.idt.com), or by contacting your local IDT sales representative.



© 2019 Renesas Electronics Corporation

## Ordering Information

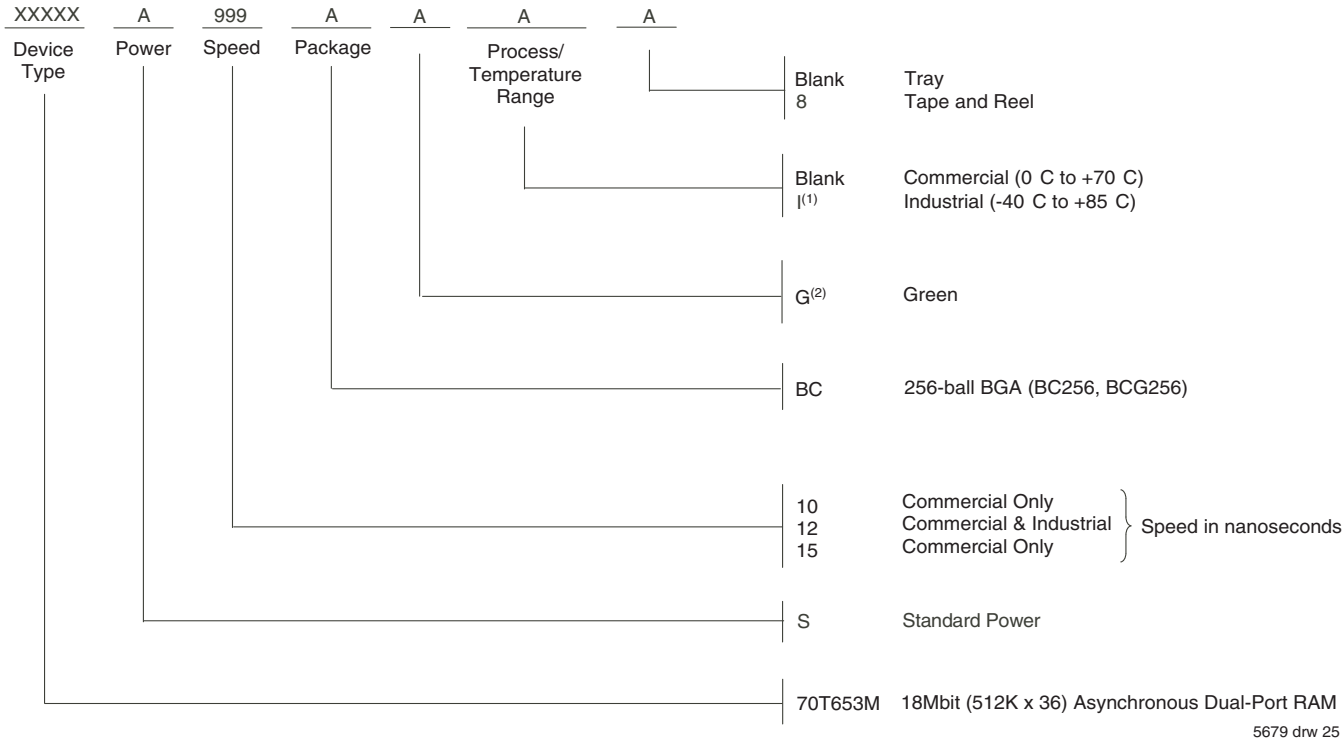


5679 drw 25

**NOTES:**
1. Contact your local sales office for additional industrial temp range speeds, packages and powers.
2. Green parts available. For specific speeds, packages and powers contact your local sales office.
   LEAD FINISH (SnPb) parts are Obsolete excluding BGA. Product Discontinuation Notice - PDN# SP-17-02
   Note that information regarding recently obsoleted parts are included in this datasheet for customer convenience.

## Orderable Part Information

| Speed (ns) | Orderable Part ID | Pkg. Code | Pkg. Type | Temp. Grade |
|---|---|---|---|---|
| 10 | 70T653MS10BC | BC256 | CABGA | C |
| | 70T653MS10BC8 | BC256 | CABGA | C |
| | 70T653MS10BCG | BCG256 | CABGA | C |
| 12 | 70T653MS12BC | BC256 | CABGA | C |
| | 70T653MS12BC8 | BC256 | CABGA | C |
| | 70T653MS12BCGI | BCG256 | CABGA | I |
| | 70T653MS12BCI | BC256 | CABGA | I |
| | 70T653MS12BCI8 | BC256 | CABGA | I |
| 15 | 70T653MS15BC | BC256 | CABGA | C |
| | 70T653MS15BC8 | BC256 | CABGA | C |



© 2019 Renesas Electronics Corporation

# Datasheet Document History:

10/08/03: Initial Datasheet
10/20/03: Page 1 Added "Includes JTAG functionality" to features
Page 13 Corrected $t_{ARF}$ to 1.5V/ns Min
09/28/04: Removed "Preliminary" status
Page 11 Updated Timing Waveform of Write Cycle No. 1, R/$\overline{W}$ Controlled Timing
Page 21 Added JTAG Configuration and JTAG Functionality descriptions
Page 1 & 24 Replaced old ® logo with the new ™ logo
06/30/05: Page 1 Added green availability to features
Page 24 Added green indicator to ordering information
07/25/08: Page 7 Corrected a typo in the DC Chars table
01/19/09: Page 24 Removed "IDT" from orderable part number
06/15/15: Page 3 Removed the date from the BC256 pin configuration
Page 24 Added Tape and Reel indicators and added footnote annotations to the Ordering Information
12/08/17: Product Discontinuation Notice - PDN# SP-17-02
Last time buy expires June 15, 2018
06/27/19: Page 3 & 24 Updated BC-256 to BC256 and BCG256
Page 24 Added Orderable Part Information table

## IMPORTANT NOTICE AND DISCLAIMER

RENESAS ELECTRONICS CORPORATION AND ITS SUBSIDIARIES (“RENESAS”) PROVIDES TECHNICAL SPECIFICATIONS AND RELIABILITY DATA (INCLUDING DATASHEETS), DESIGN RESOURCES (INCLUDING REFERENCE DESIGNS), APPLICATION OR OTHER DESIGN ADVICE, WEB TOOLS, SAFETY INFORMATION, AND OTHER RESOURCES “AS IS” AND WITH ALL FAULTS, AND DISCLAIMS ALL WARRANTIES, EXPRESS OR IMPLIED, INCLUDING, WITHOUT LIMITATION, ANY IMPLIED WARRANTIES OF MERCHANTABILITY, FITNESS FOR A PARTICULAR PURPOSE, OR NON-INFRINGEMENT OF THIRD PARTY INTELLECTUAL PROPERTY RIGHTS.

These resources are intended for developers skilled in the art designing with Renesas products. You are solely responsible for (1) selecting the appropriate products for your application, (2) designing, validating, and testing your application, and (3) ensuring your application meets applicable standards, and any other safety, security, or other requirements. These resources are subject to change without notice. Renesas grants you permission to use these resources only for development of an application that uses Renesas products. Other reproduction or use of these resources is strictly prohibited. No license is granted to any other Renesas intellectual property or to any third party intellectual property. Renesas disclaims responsibility for, and you will fully indemnify Renesas and its representatives against, any claims, damages, costs, losses, or liabilities arising out of your use of these resources. Renesas' products are provided only subject to Renesas' Terms and Conditions of Sale or other applicable terms agreed to in writing. No use of any Renesas resources expands or otherwise alters any applicable warranties or warranty disclaimers for these products.

(Rev.1.0 Mar 2020)


### Corporate Headquarters

TOYOSU FORESIA, 3-2-24 Toyosu,
Koto-ku, Tokyo 135-0061, Japan
www.renesas.com

### Contact Information

For further information on a product, technology, the most up-to-date version of a document, or your nearest sales office, please visit:
www.renesas.com/contact/


### Trademarks

Renesas and the Renesas logo are trademarks of Renesas Electronics Corporation. All trademarks and registered trademarks are the property of their respective owners.

© 2020 Renesas Electronics Corporation. All rights reserved.