HIGH-SPEED 3.3V 32K x 9 SYNCHRONOUS PIPELINED DUAL-PORT STATIC RAM

70V9179L

Features:

- **True Dual-Ported memory cells which allow simultaneous access of the same memory location**
- **High-speed clock to data access**
  - *Commercial: 7.5ns (max.)*
- **Low-power operation**
  - *IDT70V9179L*
    Active: 500mW (typ.)
    Standby: 1.5mW (typ.)
- **Flow-Through or Pipelined output mode on either port via the $\overline{FT}$/PIPE pins**
- **Dual chip enables allow for depth expansion without additional logic**
- **Counter enable and reset features**
- **Full synchronous operation on both ports**
  - *4ns setup to clock and 0ns hold on all control, data, and address inputs*
  - *Data input, address, and control registers*
  - *Fast 7.5ns clock to data out in the Pipelined output mode*
  - *Self-timed write allows fast cycle time*
  - *12ns cycle time, 83MHz operation in Pipelined output mode*
- **LVTTL- compatible, single 3.3V (±0.3V) power supply**
- **Available in a 100-pin Thin Quad Flatpack (TQFP)**
- **Green parts available, see ordering information**

Functional Block Diagram

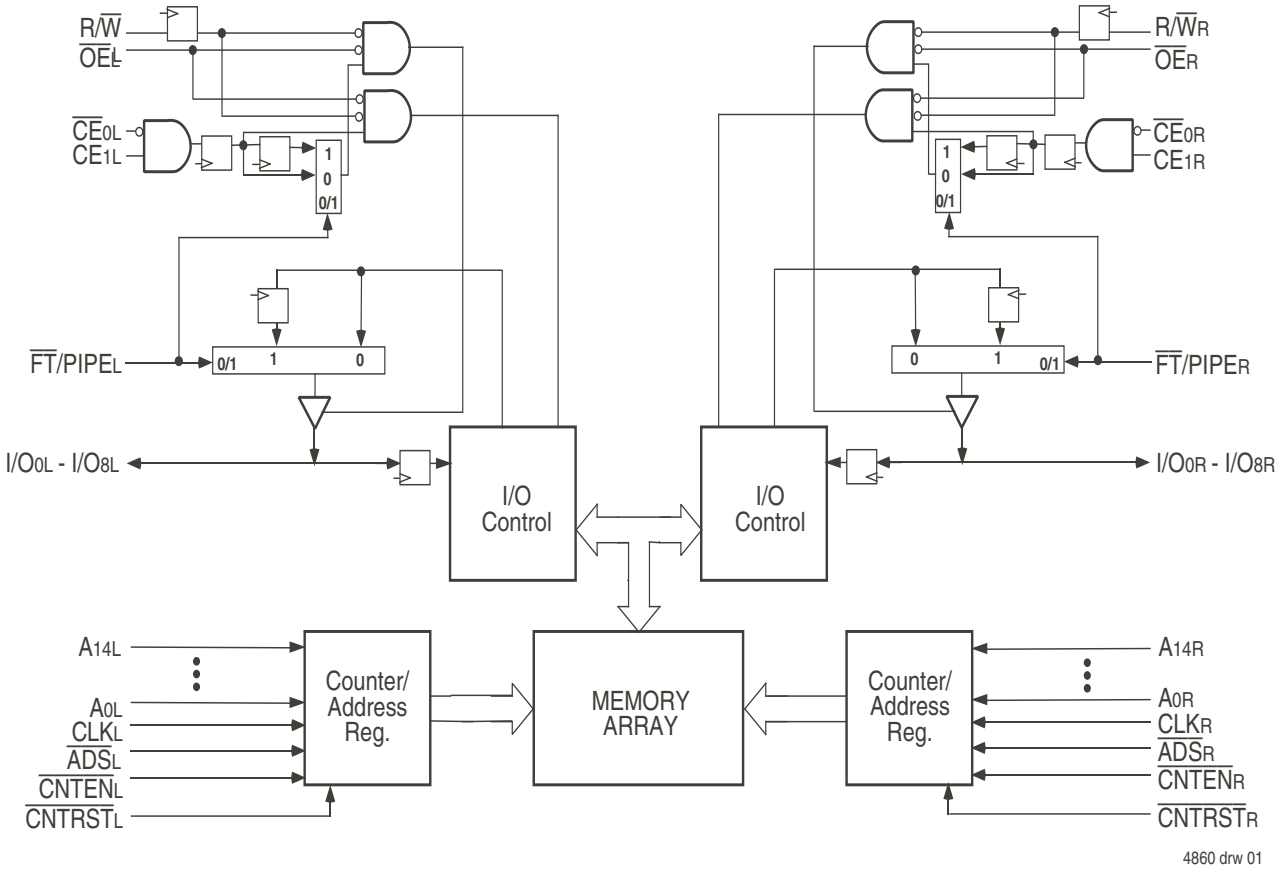

4860 drw 01

Description:

The IDT70V9179 is a high-speed 64/32K x 9 bit synchronous Dual Port RAM. The memory array utilizes Dual-Port memory cells to allow simultaneous access of any address from both ports. Registers on control, data, and address inputs provide minimal setup and hold times. The timing latitude provided by this approach allows systems to be designed with very short cycle times.

With an input data register, the IDT70V9179 has been optimized for applications having unidirectional or bidirectional data flow in bursts. An automatic power down feature, controlled by $\overline{CE}_0$ and CE_1, permits the on-chip circuitry of each port to enter a very low standby power mode. Fabricated using CMOS high-performance technology, these devices typically operate on only 500mW of power.

Pin Configuration(1,2,3)

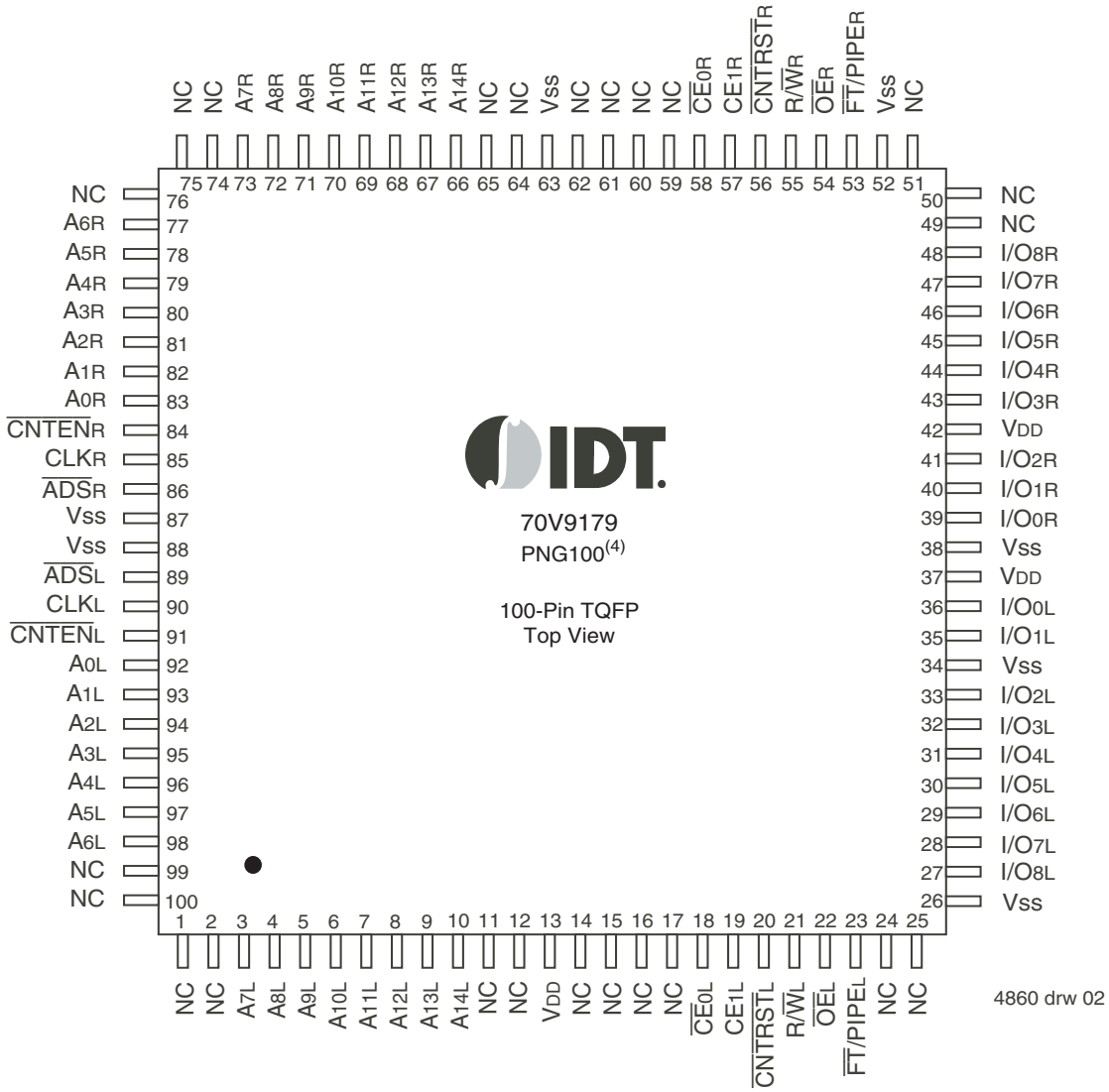

NOTES:
1. All Vcc pins must be connected to power supply.
2. All GND pins must be connected to ground.
3. Package body is approximately 14mm x 14mm x 1.4mm.
4. This package code is used to reference the package diagram.

Pin Names

Left Port	Right Port	Names
$\overline{CE}_{0L}$, CE_{1L}	$\overline{CE}_{0R}$, CE_{1R}	Chip Enables
R/$\overline{W}_L$	R/$\overline{W}_R$	Read/Write Enable
$\overline{OE}_L$	$\overline{OE}_R$	Output Enable
A_{0L} - A_{14L}	A_{0R} - A_{14R}	Address
I/O_{0L} - I/O_{8L}	I/O_{0R} - I/O_{8R}	Data Input/Output
CLK_L	CLK_R	Clock
$\overline{ADS}_L$	$\overline{ADS}_R$	Address Strobe Enable
$\overline{CNTEN}_L$	$\overline{CNTEN}_R$	Counter Enable
$\overline{CNTRST}_L$	$\overline{CNTRST}_R$	Counter Reset
$\overline{FT}$/$PIPE_L$	$\overline{FT}$/$PIPE_R$	Flow-Through / Pipeline
V_{DD}		Power (3.3V)
V_{SS}		Ground (0V)

4860 tbl 01

NOTE:
1. $\overline{LB}$ and $\overline{UB}$ are single buffered regardless of state of $\overline{FT}$/PIPE.
2. $\overline{CE}_0$ and CE_1 are single buffered when $\overline{FT}$/PIPE = V_{IL},
   $\overline{CE}_0$ and CE_1 are double buffered when $\overline{FT}$/PIPE = V_{IH},
   i.e. the signals take two cycles to deselect.

Truth Table I—Read/Write and Enable Control(1,2,3)

$\overline{OE}$	CLK	$\overline{CE}_0$	CE_1	R/$\overline{W}$	I/O_{0-8}	MODE
X	↑	H	X	X	High-Z	Deselected–Power Down
X	↑	X	L	X	High-Z	Deselected–Power Down
X	↑	L	H	L	$DATA_{IN}$	Write
L	↑	L	H	H	$DATA_{OUT}$	Read
H	X	L	H	X	High-Z	Outputs Disabled

4860 tbl 02

NOTES:
1. "H" = V_{IH}, "L" = V_{IL}, "X" = Don't Care.
2. $\overline{ADS}$, $\overline{CNTEN}$, $\overline{CNTRST}$ = X.
3. $\overline{OE}$ is an asynchronous input signal.

Truth Table II—Address Counter Control(1,2,3)

External Address	Previous Internal Address	Internal Address Used	CLK	$\overline{ADS}$	$\overline{CNTEN}$	$\overline{CNTRST}$	I/O(3)	MODE
An	X	An	↑	L(4)	X	H	$D_{I/O}$ (n)	External Address Used
X	An	An + 1	↑	H	L(5)	H	$D_{I/O}$(n+1)	Counter Enabled—Internal Address generation
X	An + 1	An + 1	↑	H	H	H	$D_{I/O}$(n+1)	External Address Blocked—Counter disabled (An + 1 reused)
X	X	A_0	↑	X	X	L(4)	$D_{I/O}$(0)	Counter Reset to Address 0

4860 tbl 03

NOTES:
1. "H" = V_{IH}, "L" = V_{IL}, "X" = Don't Care.
2. $\overline{CE}_0$ and $\overline{OE}$ = V_{IL}; CE_1 and R/$\overline{W}$ = V_{IH}.
3. Outputs configured in Flow-Through Output mode: if outputs are in Pipelined mode the data out will be delayed by one cycle.
4. $\overline{ADS}$ and $\overline{CNTRST}$ are independent of all other signals including $\overline{CE}_0$ and CE_1.
5. The address counter advances if $\overline{CNTEN}$ = V_{IL} on the rising edge of CLK, regardless of all other signals including $\overline{CE}_0$ and CE_1.

Recommended Operating Temperature and Supply Voltage

Grade	Ambient Temperature[2]	GND	V_{DD}
Commercial	0°C to +70°C	0V	3.3V ± 0.3V
Industrial	-40°C to +85°C	0V	3.3V ± 0.3V

4860 tbl 04

NOTES:
1. This is the parameter T_A. This is the "instant on" case temperature.

Recommended DC Operating Conditions

Symbol	Parameter	Min.	Typ.	Max.	Unit
V_{DD}	Supply Voltage	3.0	3.3	3.6	V
V_{SS}	Ground	0	0	0	V
V_{IH}	Input High Voltage	2.0V	—	V_{CC}+0.3V[2]	V
V_{IL}	Input Low Voltage	-0.3[1]	—	0.8	V

4860 tbl 05

NOTES:
1. $V_{IL} \geq$ -1.5V for pulse width less than 10 ns.
2. V_{TERM} must not exceed V_{DD} +0.3V.

Absolute Maximum Ratings[1]

Symbol	Rating	Commercial & Industrial	Unit
V_{TERM}[2]	Terminal Voltage with Respect to GND	-0.5 to +4.6	V
T_{BIAS}	Temperature Under Bias	-55 to +125	°C
T_{STG}	Storage Temperature	-65 to +150	°C
T_{JN}	Junction Temperature	+150	°C
I_{OUT}	DC Output Current	50	mA

4860 tbl 06

NOTES:
1. Stresses greater than those listed under ABSOLUTE MAXIMUM RATINGS may cause permanent damage to the device. This is a stress rating only and functional operation of the device at these or any other conditions above those indicated in the operational sections of this specification is not implied. Exposure to absolute maximum rating conditions for extended periods may affect reliability.
2. V_{TERM} must not exceed V_{DD} +0.3V for more than 25% of the cycle time or 10ns maximum, and is limited to ≤ 20mA for the period of $V_{TERM} \geq V_{DD}$ + 0.3V.
3. Ambient Temperature Under DC Bias. NO AC Conditions. Chip Deselected.

Capacitance[1]
(T_A = +25°C, f = 1.0MHz)

Symbol	Parameter	Conditions[2]	Max.	Unit
C_{IN}	Input Capacitance	V_{IN} = 3dV	9	pF
C_{OUT}[3]	Output Capacitance	V_{OUT} = 3dV	10	pF

4860 tbl 07

NOTES:
1. These parameters are determined by device characterization, but are not production tested.
2. 3dV references the interpolated capacitance when the input and output switch from 0V to 3V or from 3V to 0V.
3. C_{OUT} also references $C_{I/O}$.

DC Electrical Characteristics Over the Operating Temperature and Supply Voltage Range (V_{DD} = 3.3V ± 0.3V)

Symbol	Parameter	Test Conditions	70V9179L		Unit
			Min.	Max.	
$\|I_{LI}\|$	Input Leakage Current[1]	V_{DD} = 3.6V, V_{IN} = 0V to V_{DD}	—	5	µA
$\|I_{LO}\|$	Output Leakage Current	$\overline{CE}$ = V_{IH} or CE_1 = V_{IL}, V_{OUT} = 0V to V_{DD}	—	5	µA
V_{OL}	Output Low Voltage	I_{OL} = +4mA	—	0.4	V
V_{OH}	Output High Voltage	I_{OH} = -4mA	2.4	—	V

4860 tbl 08_79

NOTE:
1. At $V_{DD} \leq$ 2.0V input leakages are undefined.

DC Electrical Characteristics Over the Operating Temperature Supply Voltage Range[3] (V_{DD} = 3.3V ± 0.3V)

Symbol	Parameter	Test Condition	Version		70V9179L7 Com'l Only Typ.[4]	70V9179L7 Com'l Only Max.	70V9179L9 Com'l & Ind Typ.[4]	70V9179L9 Com'l & Ind Max.	70V9179L12 Com'l Only Typ.[4]	70V9179L12 Com'l Only Max.	Unit
I_{CC}	Dynamic Operating Current (Both Ports Active)	$\overline{CE}_L$ and $\overline{CE}_R$= V_{IL}, Outputs Disabled, f = f_{MAX}[1]	COM'L	L	200	310	180	260	150	230	mA
			IND	L	—	—	180	280	—	—	
I_{SB1}	Standby Current (Both Ports - TTL Level Inputs)	$\overline{CE}_L$ = $\overline{CE}_R$ = V_{IH} f = f_{MAX}[1]	COM'L	L	65	130	50	100	40	80	mA
			IND	L	—	—	50	120	—	—	
I_{SB2}	Standby Current (One Port - TTL Level Inputs)	$\overline{CE}$"A" = V_{IL} and $\overline{CE}$"B" = V_{IH}[5] Active Port Outputs Disabled, f=f_{MAX}[1]	COM'L	L	140	245	110	190	100	175	mA
			IND	L	—	—	110	205	—	—	
I_{SB3}	Full Standby Current (Both Ports - CMOS Level Inputs)	Both Ports $\overline{CE}_L$ and $\overline{CE}_R \geq V_{DD}$ - 0.2V, $V_{IN} \geq V_{DD}$ - 0.2V or $V_{IN} \leq$ 0.2V, f = 0[2]	COM'L	L	0.4	3	0.4	3	0.4	3	mA
			IND	L	—	—	0.4	6	—	—	
I_{SB4}	Full Standby Current (One Port - CMOS Level Inputs)	$\overline{CE}$"A" $\leq$ 0.2V and $\overline{CE}$"B" $\geq V_{DD}$ - 0.2V[5] $V_{IN} \geq V_{DD}$ - 0.2V or $V_{IN} \leq$ 0.2V, Active Port, Outputs Disabled, f = f_{MAX}[1]	COM'L	L	130	235	100	180	90	165	mA
			IND	L	—	—	100	195	—	—	

4860 tbl 09_79

NOTES:

1. At f = f_{MAX}, address and control lines (except Output Enable) are cycling at the maximum frequency clock cycle of 1/t_{CYC}, using "AC TEST CONDITIONS" at input levels of GND to 3V.
2. f = 0 means no address, clock, or control lines change. Applies only to input at CMOS level standby.
3. Port "A" may be either left or right port. Port "B" is the opposite from port "A".
4. V_{DD} = 3.3V, T_A = 25°C for Typ, and are not production tested. $I_{CC\,DC}$(f=0) = 90mA (Typ).
5. $\overline{CE}_X$ = V_{IL} means $\overline{CE}_{0X}$ = V_{IL} and CE_{1X} = V_{IH}
   $\overline{CE}_X$ = V_{IH} means $\overline{CE}_{0X}$ = V_{IH} or CE_{1X} = V_{IL}
   $\overline{CE}_X \leq$ 0.2V means $\overline{CE}_{0X} \leq$ 0.2V and $CE_{1X} \geq V_{CC}$ - 0.2V
   $\overline{CE}_X \geq V_{DD}$ - 0.2V means $\overline{CE}_{0X} \geq V_{DD}$ - 0.2V or $CE_{1X} \leq$ 0.2V
   "X" represents "L" for left port or "R" for right port.

AC Test Conditions

Input Pulse Levels	GND to 3.0V
Input Rise/Fall Times	3ns Max.
Input Timing Reference Levels	1.5V
Output Reference Levels	1.5V
Output Load	Figures 1, 2, and 3

4860 tbl 10

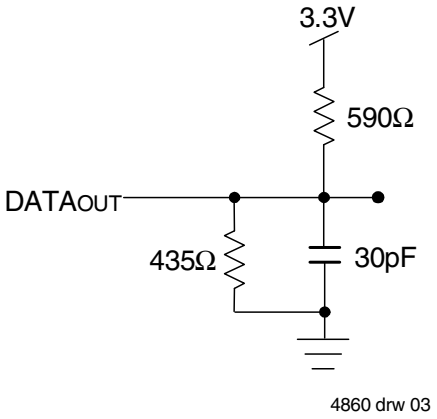

Figure 1. AC Output Test load.

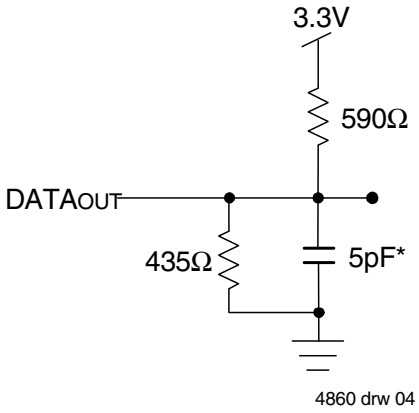

Figure 2. Output Test Load (For t_{CKLZ}, t_{CKHZ}, t_{OLZ}, and t_{OHZ}).
*Including scope and jig.

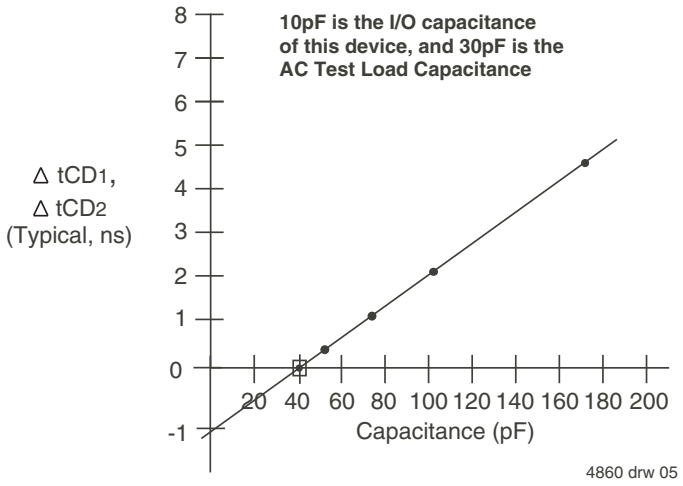

Figure 3. Typical Output Derating (Lumped Capacitive Load).

AC Electrical Characteristics Over the Operating Temperature Range (Read and Write Cycle Timing)[3] (V_{DD} = 3.3V ± 0.3V, T_A = 0°C to +70°C)

		70V9179L7 Com'l Only		70V9179L9 Com'l & Ind		70V9179L12 Com'l Only		
Symbol	**Parameter**	**Min.**	**Max.**	**Min.**	**Max.**	**Min.**	**Max.**	**Unit**
t_{CYC1}	Clock Cycle Time (Flow-Through)[2]	22	—	25	—	30	—	ns
t_{CYC2}	Clock Cycle Time (Pipelined)[2]	12	—	15	—	20	—	ns
t_{CH1}	Clock High Time (Flow-Through)[2]	7.5	—	12	—	12	—	ns
t_{CL1}	Clock Low Time (Flow-Through)[2]	7.5	—	12	—	12	—	ns
t_{CH2}	Clock High Time (Pipelined)[2]	5	—	6	—	8	—	ns
t_{CL2}	Clock Low Time (Pipelined)[2]	5	—	6	—	8	—	ns
t_R	Clock Rise Time	—	3	—	3	—	3	ns
t_F	Clock Fall Time	—	3	—	3	—	3	ns
t_{SA}	Address Setup Time	4	—	4	—	4	—	ns
t_{HA}	Address Hold Time	0	—	1	—	1	—	ns
t_{SC}	Chip Enable Setup Time	4	—	4	—	4	—	ns
t_{HC}	Chip Enable Hold Time	0	—	1	—	1	—	ns
t_{SW}	R/W Setup Time	4	—	4	—	4	—	ns
t_{HW}	R/W Hold Time	0	—	1	—	1	—	ns
t_{SD}	Input Data Setup Time	4	—	4	—	4	—	ns
t_{HD}	Input Data Hold Time	0	—	1	—	1	—	ns
t_{SAD}	$\overline{ADS}$ Setup Time	4	—	4	—	4	—	ns
t_{HAD}	$\overline{ADS}$ Hold Time	0	—	1	—	1	—	ns
t_{SCN}	$\overline{CNTEN}$ Setup Time	4	—	4	—	4	—	ns
t_{HCN}	$\overline{CNTEN}$ Hold Time	0	—	1	—	1	—	ns
t_{SRST}	$\overline{CNTRST}$ Setup Time	4	—	4	—	4	—	ns
t_{HRST}	$\overline{CNTRST}$ Hold Time	0	—	1	—	1	—	ns
t_{OE}	Output Enable to Data Valid	—	9	—	12	—	12	ns
t_{OLZ}	Output Enable to Output Low-Z[1]	2	—	2	—	2	—	ns
t_{OHZ}	Output Enable to Output High-Z[1]	1	7	1	7	1	7	ns
t_{CD1}	Clock to Data Valid (Flow-Through)[2]	—	18	—	20	—	25	ns
t_{CD2}	Clock to Data Valid (Pipelined)[2]	—	7.5	—	9	—	12	ns
t_{DC}	Data Output Hold After Clock High	2	—	2	—	2	—	ns
t_{CKHZ}	Clock High to Output High-Z[1]	2	9	2	9	2	9	ns
t_{CKLZ}	Clock High to Output Low-Z[1]	2	—	2	—	2	—	ns
Port-to-Port Delay								
t_{CWDD}	Write Port Clock High to Read Data Delay	—	28	—	35	—	40	ns
t_{CCS}	Clock-to-Clock Setup Time	—	10	—	15	—	15	ns

4860 tbl 11_79

NOTES:
1. Transition is measured 0mV from Low or High-impedance voltage with the Output Test Load (Figure 2). This parameter is guaranteed by device characterization, but is not production tested.
2. The Pipelined output parameters (t_{CYC2}, t_{CD2}) apply to either or both the Left and Right ports when $\overline{FT}$/PIPE = V_{IH}. Flow-through parameters (t_{CYC1}, t_{CD1}) apply when $\overline{FT}$/PIPE = V_{IL} for that port.
3. All input signals are synchronous with respect to the clock except for the asynchronous Output Enable ($\overline{OE}$), $\overline{FT}$/PIPE$_R$, and $\overline{FT}$/PIPE$_L$.

Timing Waveform of Read Cycle for Flow-Through Output ($\overline{FT}$/PIPE"X" = VIL)(3,6)

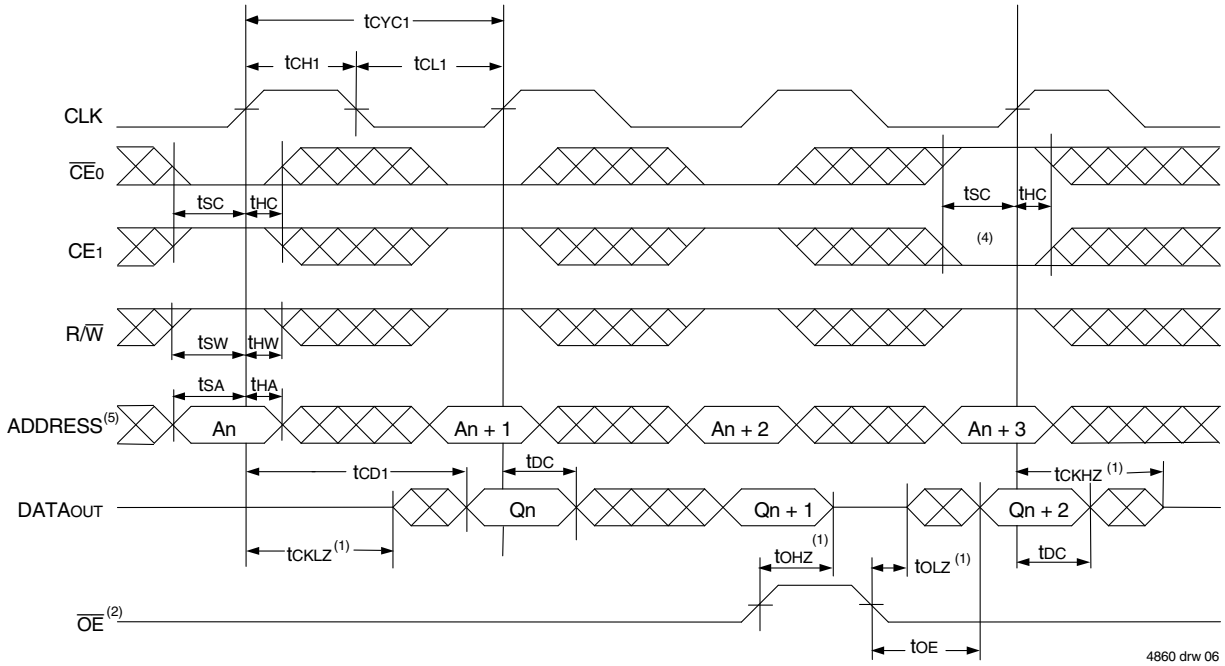

Timing Waveform of Read Cycle for Pipelined Output ($\overline{FT}$/PIPE"X" = VIH)(3,6)

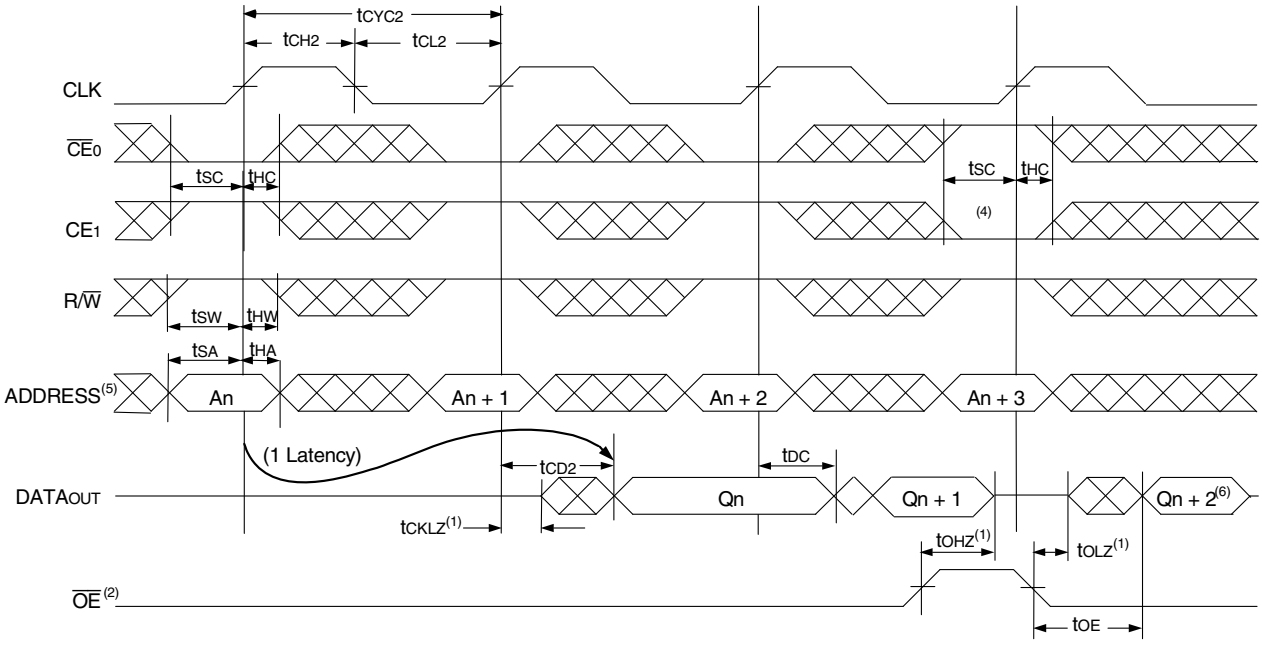

NOTES:

1. Transition is measured 0mV from Low or High-impedance voltage with the Output Test Load (Figure 2).
2. $\overline{OE}$ is asynchronously controlled; all other inputs are synchronous to the rising clock edge.
3. $\overline{ADS}$ = VIL, $\overline{CNTEN}$ and $\overline{CNTRST}$ = VIH.
4. The output is disabled (High-Impedance state) by $\overline{CE}_0$ = VIH or CE1 = VIL following the next rising edge of the clock. Refer to Truth Table 1.
5. Addresses do not have to be accessed sequentially since ADS = VIL constantly loads the address on the rising edge of the CLK; numbers are for reference use only.
6. "X' here denotes Left or Right port. The diagram is with respect to that port.

Timing Waveform of a Bank Select Pipelined Read(1,2)

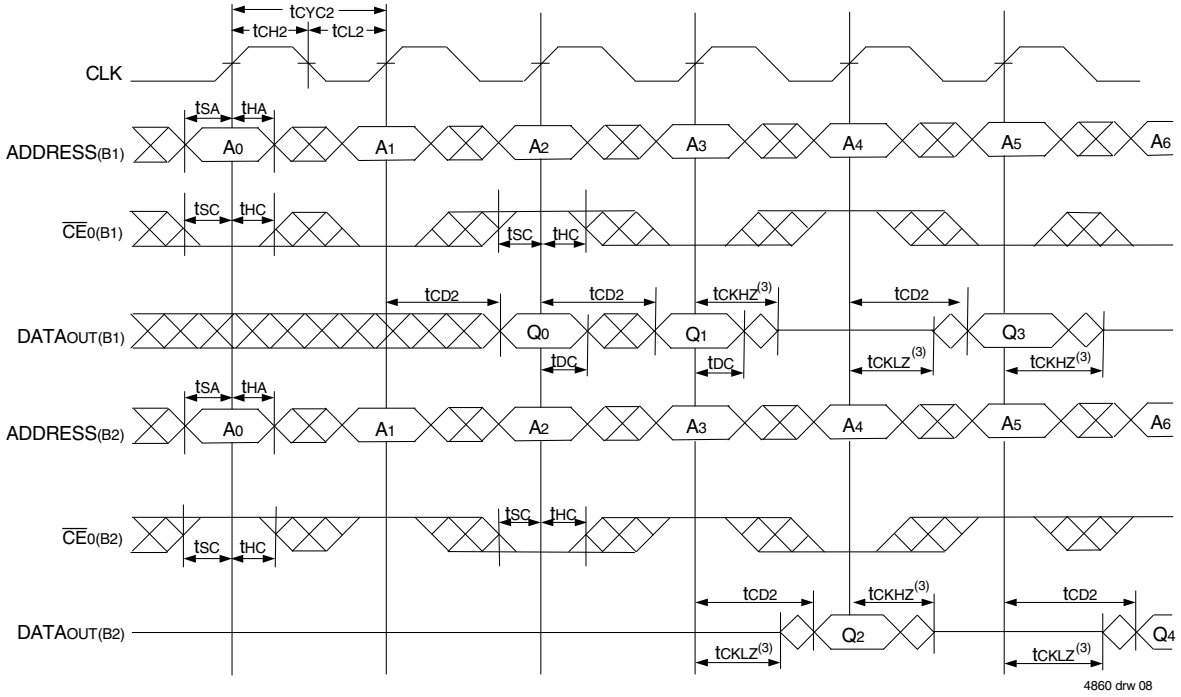

Timing Waveform of a Bank Select Flow-Through Read(6)

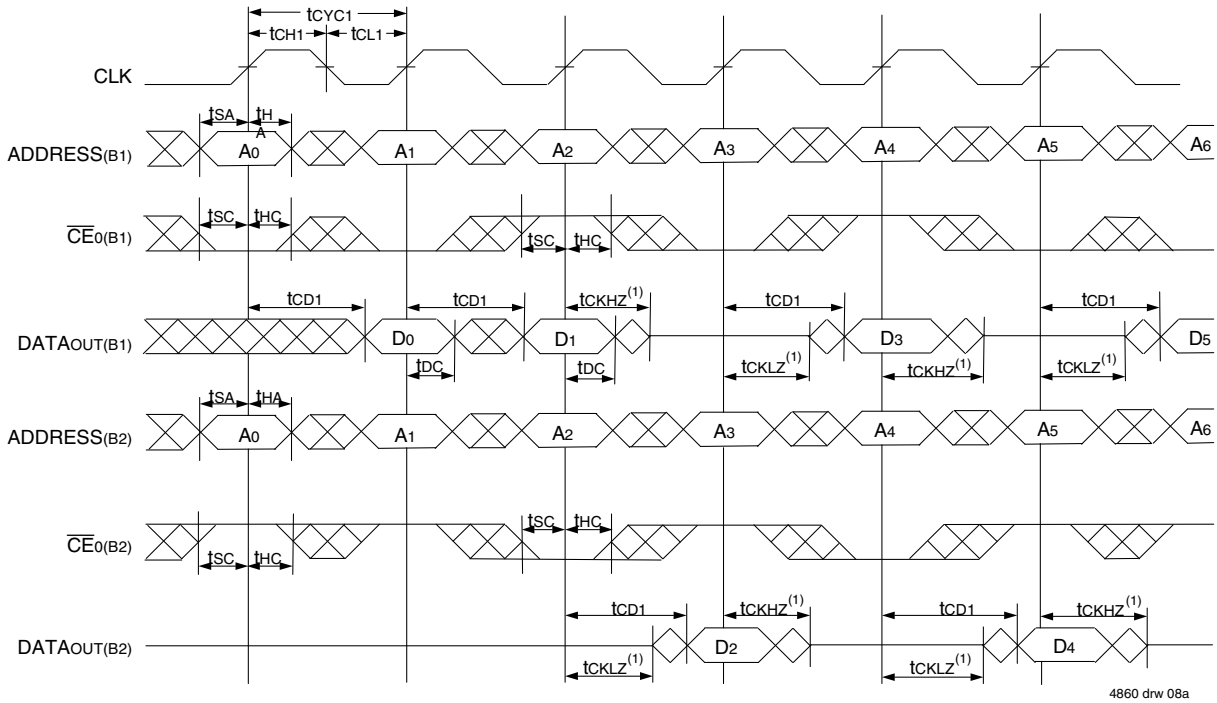

NOTES:

1. B1 Represents Bank #1; B2 Represents Bank #2. Each Bank consists of one IDT70V9179 for this waveform, and are setup for depth expansion in this example. ADDRESS(B1) = ADDRESS(B2) in this situation.
2. $\overline{OE}$ and $\overline{ADS}$ = V_{IL}; $CE_{1(B1)}$, $CE_{1(B2)}$, R/$\overline{W}$, $\overline{CNTEN}$, and $\overline{CNTRST}$ = V_{IH}.
3. Transition is measured 0mV from Low or High-impedance voltage with the Output Test Load (Figure 2).
4. $\overline{CE}_0$ and $\overline{ADS}$ = V_{IL}; CE_1, $\overline{CNTEN}$, and $\overline{CNTRST}$ = V_{IH}.
5. $\overline{OE}$ = V_{IL} for the Right Port, which is being read from. $\overline{OE}$ = V_{IH} for the Left Port, which is being written to.
6. If t_{CCS} ≤ maximum specified, then data from right port READ is not valid until the maximum specified for t_{CWDD}. If t_{CCS} > maximum specified, then data from right port READ is not valid until t_{CCS} + t_{CD1}. t_{CWDD} does not apply in this case.

Timing Waveform with Port-to-Port Flow-Through Read(4,5,7)

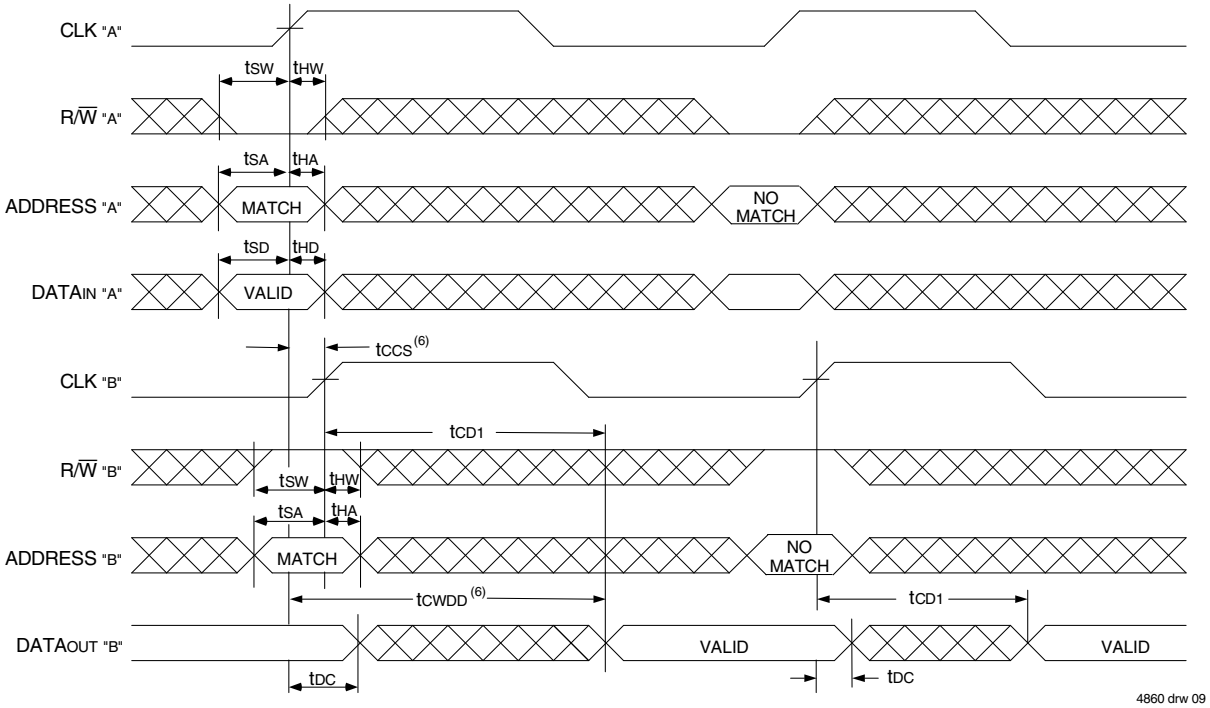

NOTES:

1. B1 Represents Bank #1; B2 Represents Bank #2. Each Bank consists of one IDT70V9179 for this waveform, and are setup for depth expansion in this example. ADDRESS(B1) = ADDRESS(B2) in this situation.
2. $\overline{OE}$, and $\overline{ADS}$ = V_{IL}; $CE_{1(B1)}$, $CE_{1(B2)}$, R/$\overline{W}$, $\overline{CNTEN}$, and $\overline{CNTRST}$ = V_{IH}.
3. Transition is measured 0mV from Low or High-impedance voltage with the Output Test Load (Figure 2).
4. $\overline{CE}_0$ and $\overline{ADS}$ = V_{IL}; CE_1, $\overline{CNTEN}$, and $\overline{CNTRST}$ = V_{IH}.
5. $\overline{OE}$ = V_{IL} for the Right Port, which is being read from. $\overline{OE}$ = V_{IH} for the Left Port, which is being written to.
6. If $t_{CCS} \leq$ maximum specified, then data from right port READ is not valid until the maximum specified for t_{CWDD}.
   If t_{CCS} > maximum specified, then data from right port READ is not valid until $t_{CCS} + t_{CD1}$. t_{CWDD} does not apply in this case.
7. All timing is the same for both Left and Right ports. Port "A" may be either Left or Right port. Port "B" is the opposite from Port "A".

Timing Waveform of Pipelined Read-to-Write-to-Read ($\overline{OE}$ = VIL)(3)

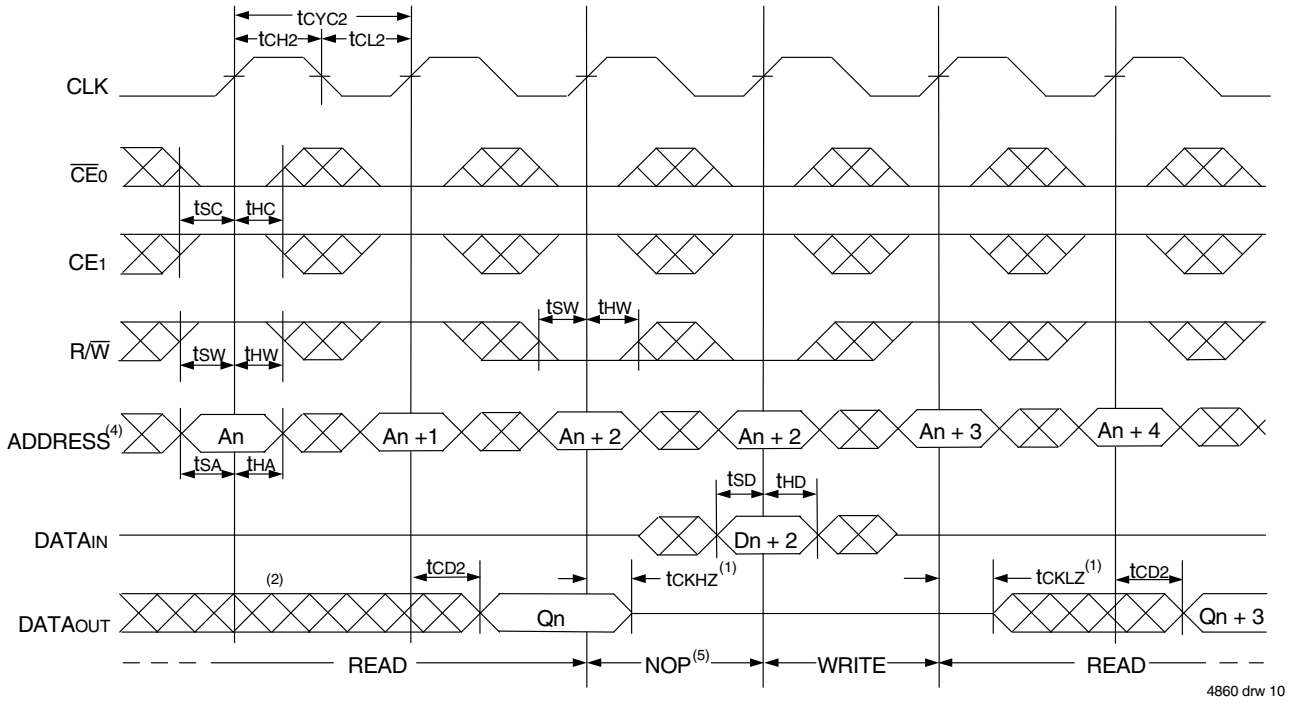

Timing Waveform of Pipelined Read-to-Write-to-Read ($\overline{OE}$ Controlled)(3)

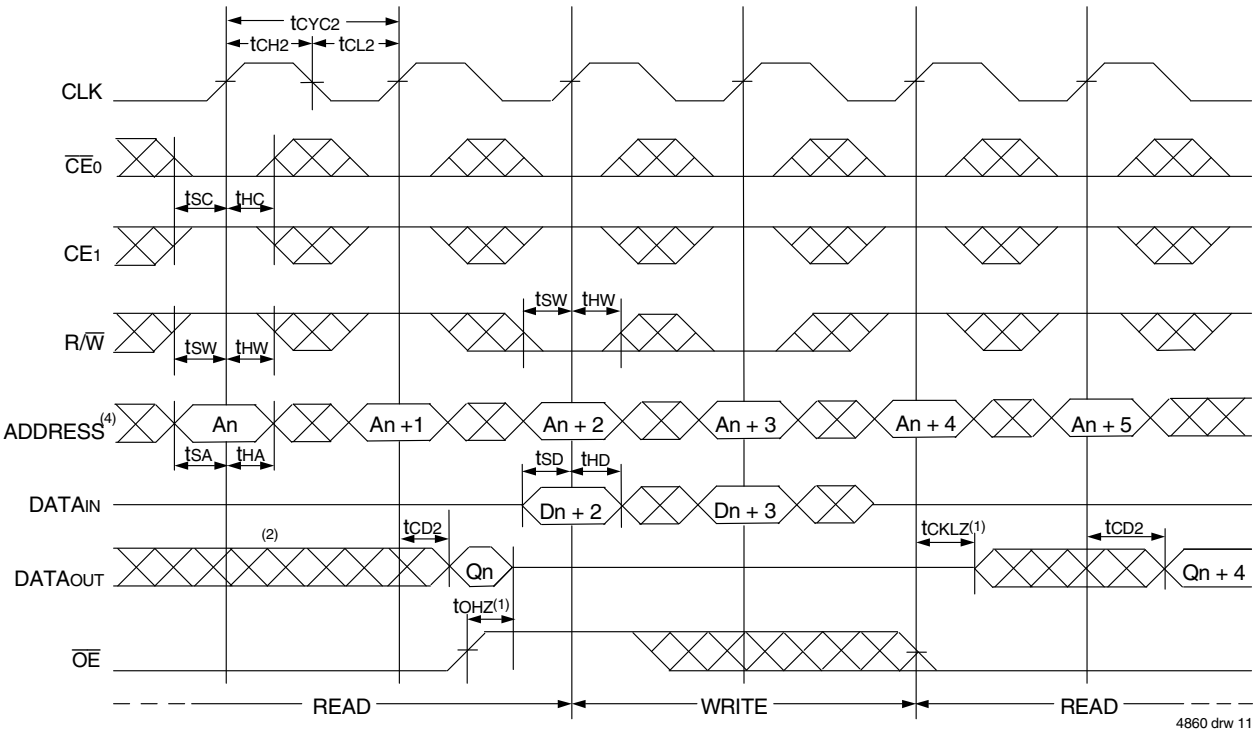

NOTES:

1. Transition is measured 0mV from Low or High-impedance voltage with the Output Test Load (Figure 2).
2. Output state (High, Low, or High-impedance) is determined by the previous cycle control signals.
3. $\overline{CE}_0$ and $\overline{ADS}$ = VIL; CE1, $\overline{CNTEN}$, and $\overline{CNTRST}$ = VIH. "NOP" is "No Operation".
4. Addresses do not have to be accessed sequentially since ADS = VIL constantly loads the address on the rising edge of the CLK; numbers are for reference use only.
5. "NOP" is "No Operation." Data in memory at the selected address may be corrupted and should be re-written to guarantee data integrity.

Timing Waveform of Flow-Through Read-to-Write-to-Read ($\overline{OE}$ = VIL)(3)

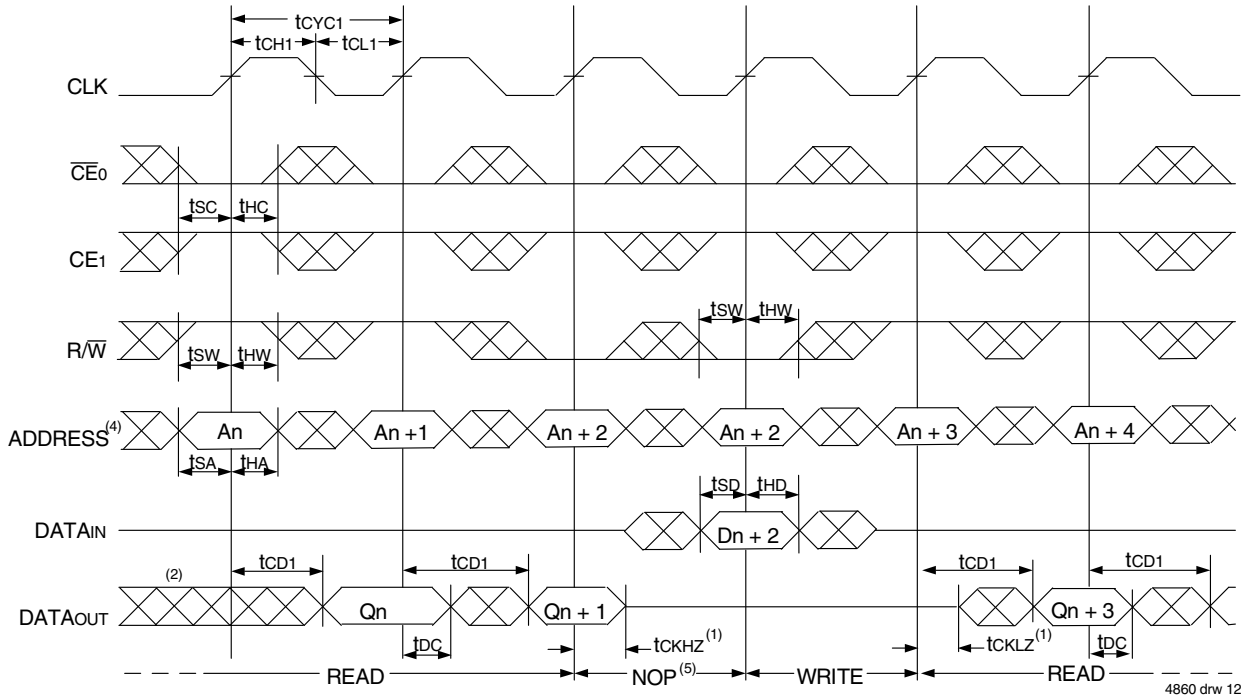

Timing Waveform of Flow-Through Read-to-Write-to-Read ($\overline{OE}$ Controlled)(3)

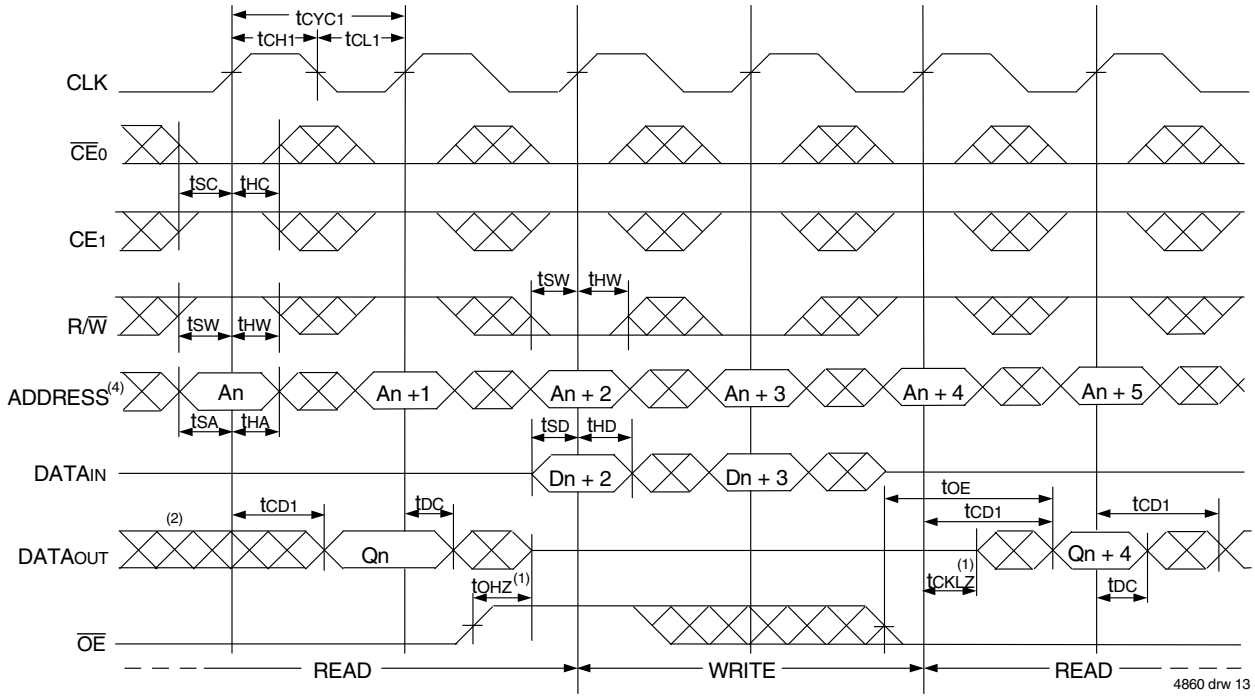

NOTES:

1. Transition is measured 0mV from Low or High-impedance voltage with the Output Test Load (Figure 2).
2. Output state (High, Low, or High-impedance) is determined by the previous cycle control signals.
3. $\overline{CE_0}$ and $\overline{ADS}$ = VIL; CE1, $\overline{CNTEN}$, and $\overline{CNTRST}$ = VIH. "NOP" is "No Operation".
4. Addresses do not have to be accessed sequentially since $\overline{ADS}$ = VIL constantly loads the address on the rising edge of the CLK; numbers are for reference use only.
5. "NOP" is "No Operation." Data in memory at the selected address may be corrupted and should be re-written to guarantee data integrity.

Timing Waveform of Pipelined Read with Address Counter Advance(1)

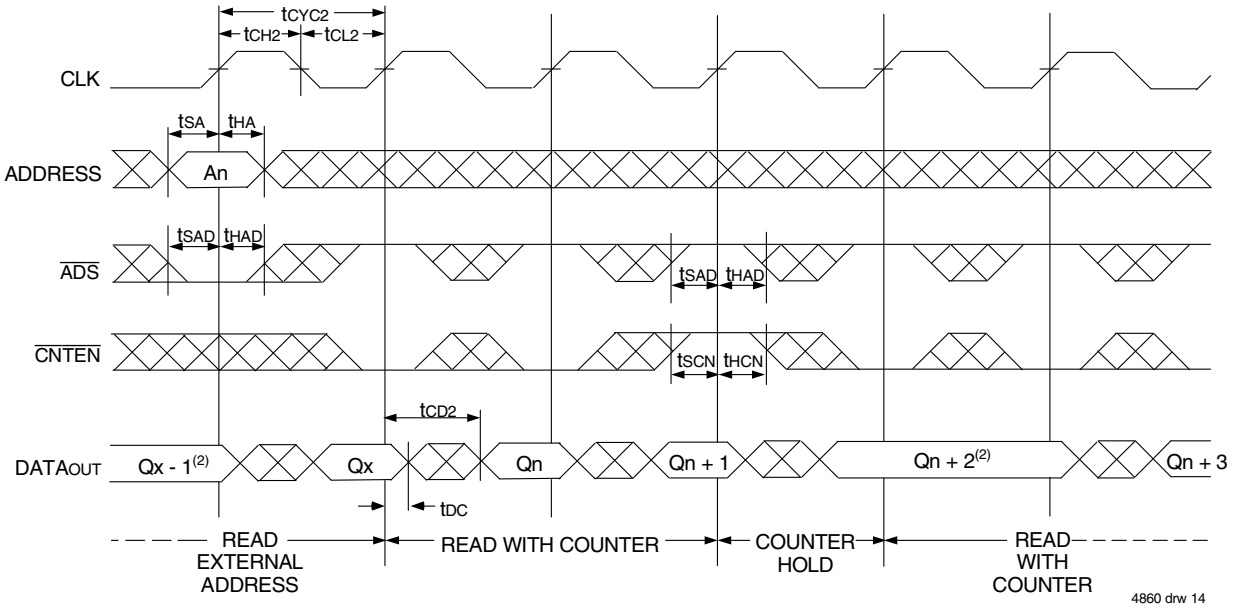

Timing Waveform of Flow-Through Read with Address Counter Advance(1)

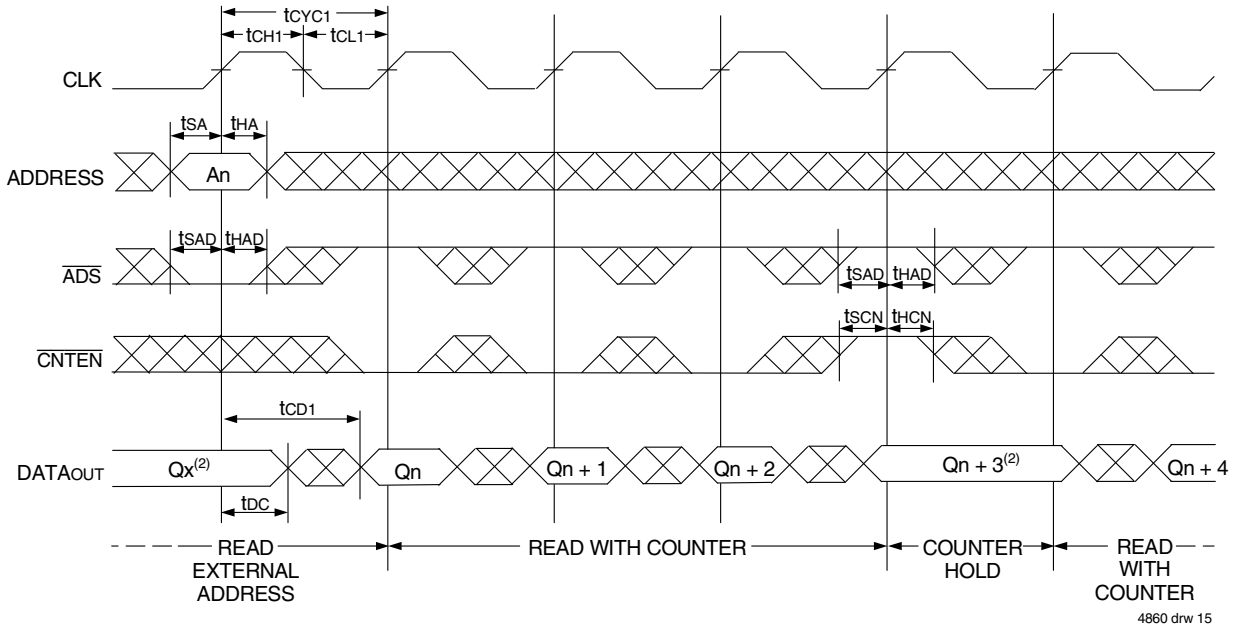

NOTES:

1. $\overline{CE_0}$ and $\overline{OE}$ = V_{IL}; CE_1, R/$\overline{W}$, and $\overline{CNTRST}$ = V_{IH}.
2. If there is no address change via $\overline{ADS}$ = V_{IL} (loading a new address) or $\overline{CNTEN}$ = V_{IL} (advancing the address), i.e. $\overline{ADS}$ = V_{IH} and $\overline{CNTEN}$ = V_{IH}, then the data output remains constant for subsequent clocks.

Timing Waveform of Write with Address Counter Advance (Flow-Through or Pipelined Outputs)(1)

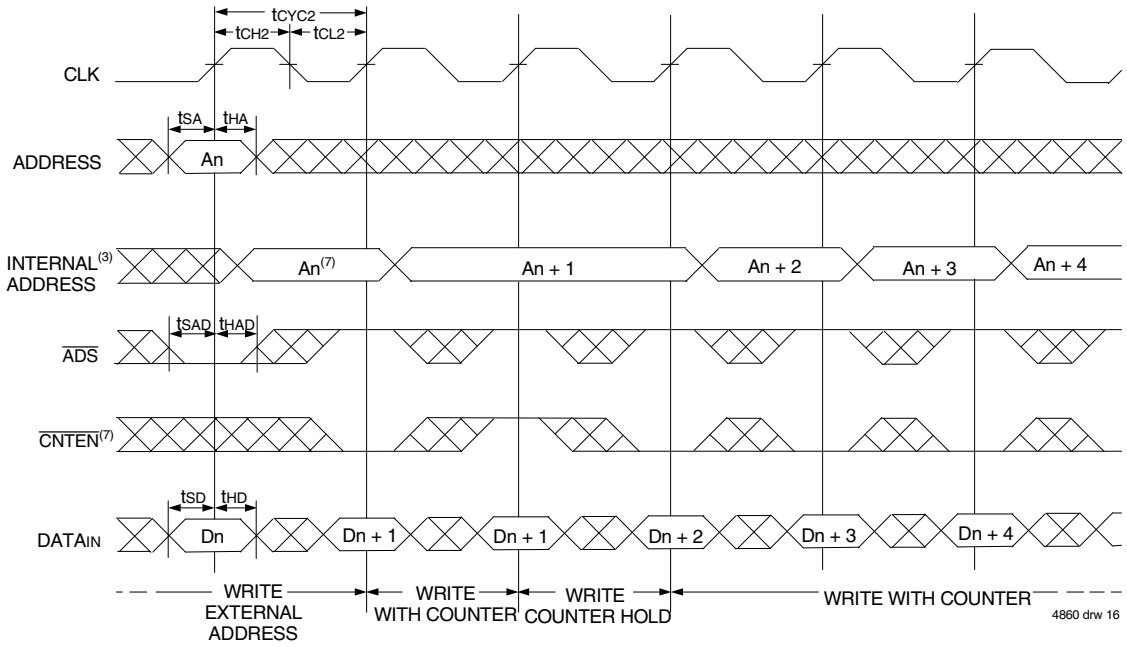

Timing Waveform of Counter Reset (Pipelined Outputs)(2)

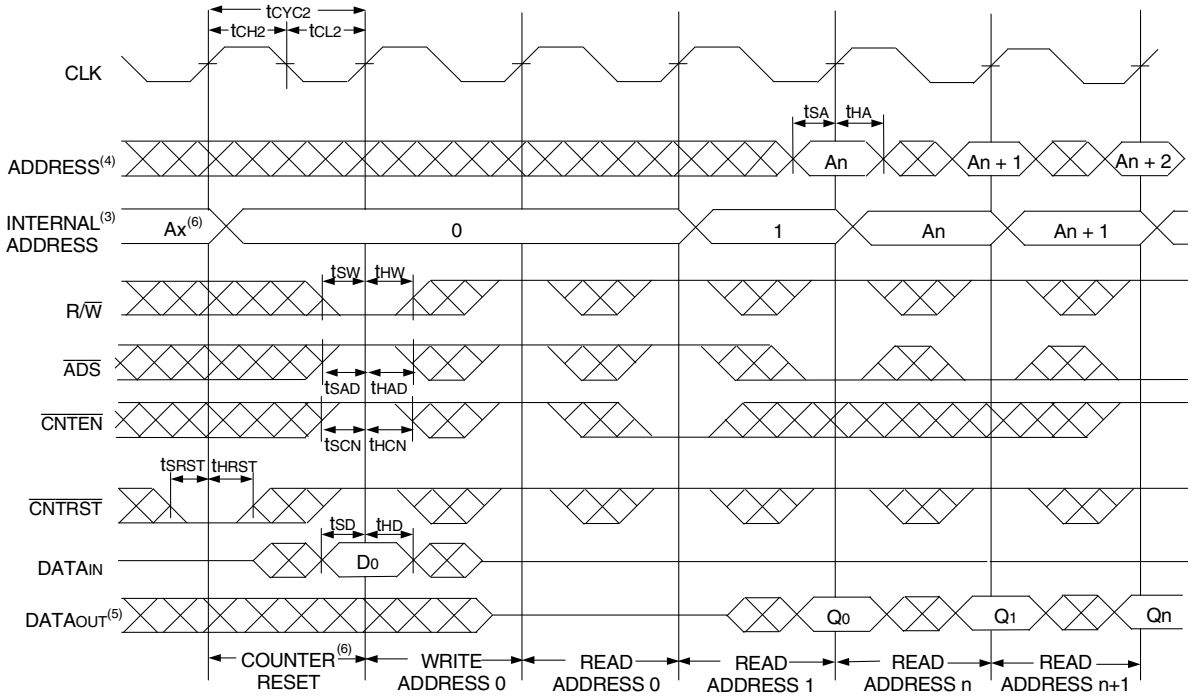

NOTES:

1. $\overline{CE_0}$ and R/$\overline{W}$ = V_{IL}; CE_1 and $\overline{CNTRST}$ = V_{IH}.
2. $\overline{CE_0}$ = V_{IL}; CE_1 = V_{IH}.
3. The "Internal Address" is equal to the "External Address" when $\overline{ADS}$ = V_{IL} and equals the counter output when $\overline{ADS}$ = V_{IH}.
4. Addresses do not have to be accessed sequentially since $\overline{ADS}$ = V_{IL} constantly loads the address on the rising edge of the CLK; numbers are for reference use only.
5. Output state (High, Low, or High-impedance) is determined by the previous cycle control signals.
6. No dead cycle exists during counter reset. A READ or WRITE cycle may be coincidental with the counter reset cycle. $ADDR_0$ will be accessed. Extra cycles are shown here simply for clarification.
7. $\overline{CNTEN}$ = V_{IL} advances Internal Address from 'An' to 'An +1'. The transition shown indicates the time required for the counter to advance. The 'An +1' Address is written to during this cycle.

Functional Description

The IDT70V9179 provides a true synchronous Dual-Port Static RAM interface. Registered inputs provide minimal set-up and hold times on address, data, and all critical control inputs. All internal registers are clocked on the rising edge of the clock signal, however, the self-timed internal write pulse is independent of the LOW to HIGH transition of the clock signal.

An asynchronous output enable is provided to ease asynchronous bus interfacing. Counter enable inputs are also provided to staff the operation of the address counters for fast interleaved memory applications.

$\overline{CE}_0 = V_{IH}$ or $CE_1 = V_{IL}$ for one clock cycle will power down the internal circuitry to reduce static power consumption. Multiple chip enables allow easier banking of multiple IDT70V9179's for depth expansion configurations. When the Pipelined output mode is enabled, two cycles are required with $\overline{CE}_0 = V_{IL}$ and $CE_1 = V_{IH}$ to re-activate the outputs.

Depth and Width Expansion

The IDT70V9179 features dual chip enables (refer to Truth Table I) in order to facilitate rapid and simple depth expansion with no requirements for external logic. Figure 4 illustrates how to control the various chip enables in order to expand two devices in depth.

The IDT70V9179 can also be used in applications requiring expanded width, as indicated in Figure 4. Since the banks are allocated at the discretion of the user, the external controller can be set up to drive the input signals for the various devices as required to allow for 18-bit or wider applications.

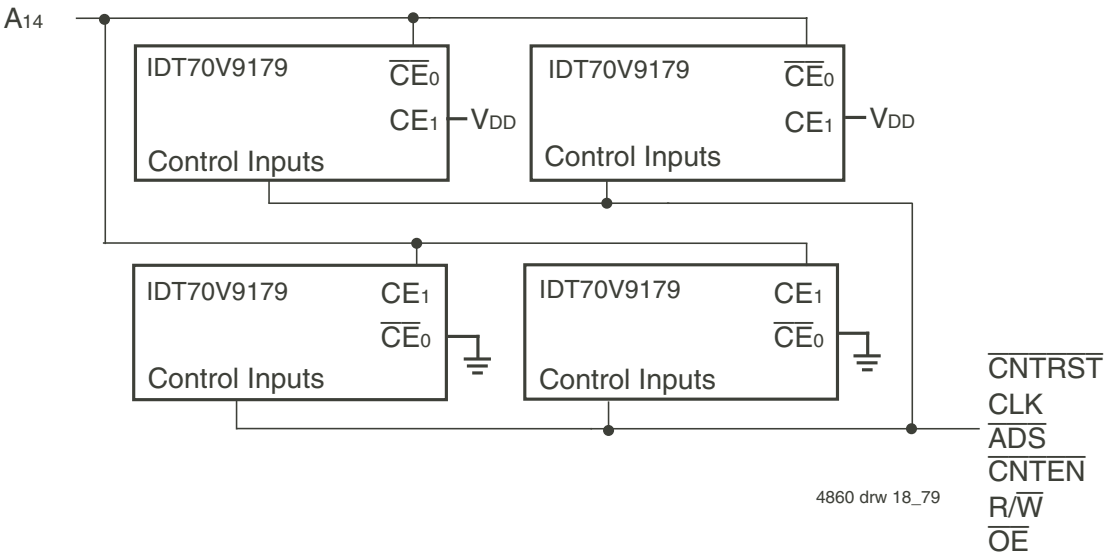

Figure 4. Depth and Width Expansion with IDT70V9179

Ordering Information

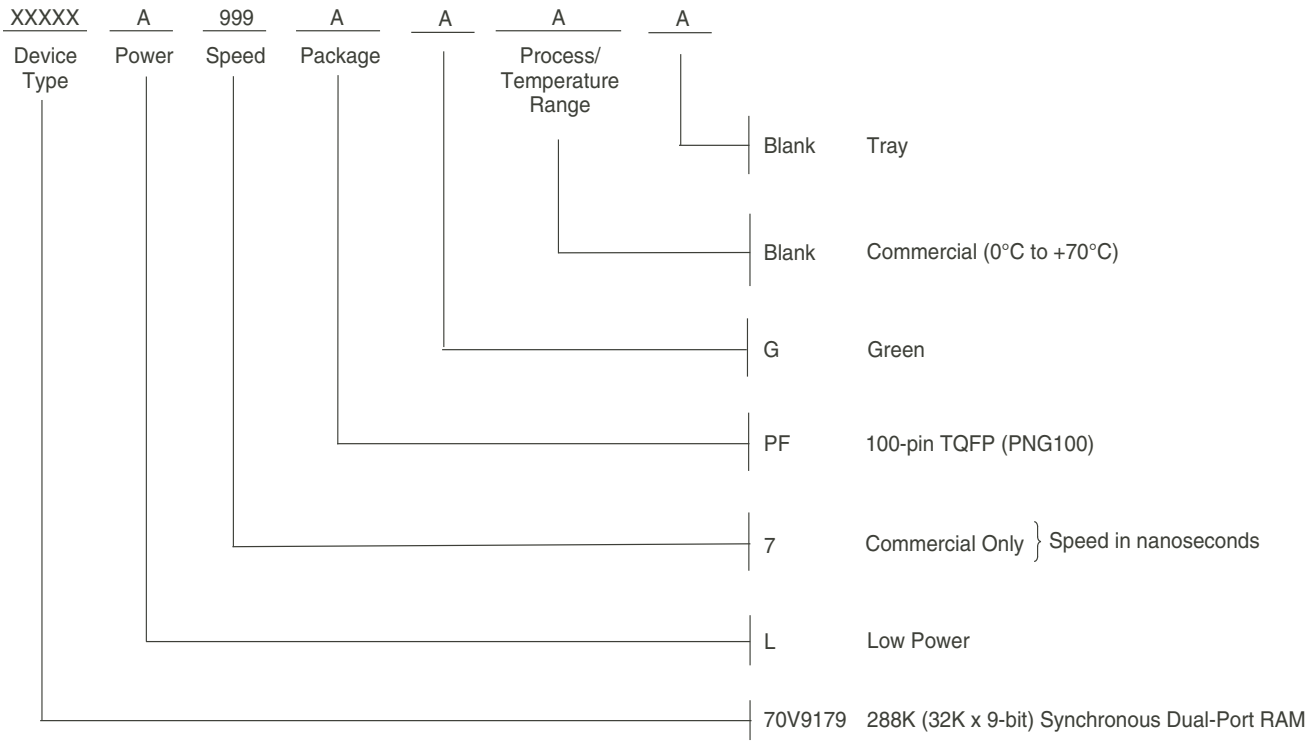

4860d19_79

NOTES:
LEAD FINISH (SnPb) parts are Obsolete. Product Discontinuation Notice - PDN# SP-17-02
Note that information regarding recently obsoleted parts are included in this datasheet for customer convenience.

IDT Clock Solution for IDT70V9179 Dual-Port

IDT Dual-Port Part Number	Dual-Port I/O Specitications		Clock Specifications				IDT PLL Clock Device	IDT Non-PLL Clock Device
	Voltage	I/O	Input Capacitance	Input Duty Cycle Requirement	Maximum Frequency	Jitter Tolerance		
70V9179	3.3	LVTTL	9pF	40%	100	150ps	2305 2308 2309	49FCT3805 49FCT3805D/E 74FCT3807 74FCT3807D/E

4860 tbl 12_79

Orderable Part Information

Speed (ns)	Orderable Part ID	Pkg. Code	Pkg. Type	Temp. Grade
7	70V9179L7PFG	PNG100	TQFP	C

Datasheet Document History

09/30/99: Initial Public Release

11/12/99: Replaced IDT logo

01/10/01:
- Page 3 Changed information in Truth Table II
- Page 4 Increased storage temperature parameters
- Clarified T_A parameter
- Page 5 DC Electrical parameters–changed wording from "open" to "disabled"
- Changed ±200mV to 0mV in notes
- Removed Preliminary status

01/15/04:
- Consolidated multiple devices into one datasheet
- Changed naming conventions from V_{CC} to V_{DD} and from GND to Vss
- Removed I-temp footnote
- Page 2 Added date revision to pin configuration
- Page 4 Added Junction Temperature to Absolute Maximum Ratings Table
- Added Ambient Temperature footnote
- Page 5 Added I-temp numbers for 9ns speed to the DC Electrical Characteristics Table
- Added 6ns speed DC power numbers to the DC Electrical Characteristics Table
- Page 7 Added I-temp for 9ns speed to AC Electrical Characteristics Table
- Added 6ns speed AC timing numbers to the AC Electrical Characteristics Table
- Page 15 Added 6ns speed grade and 9ns I-temp to ordering information
- Added IDT Clock Solution Table

01/29/09: Page 16 Removed "IDT" from orderable part number

01/27/14:
- Page 1 Added green availability to Features
- Page 1 Removed 6.5ns commercial speed, downgraded the clock from 6.5ns to 7.5ns, the cycle time from 10ns to 12.5ns and downgraded the operation from 100MHz to 83MHz data access in Pipelined output mode in the Features
- Page 1 Changed the maximum number of addresses for both the $_L$ and $_R$ from A_{15} to A_{14} in the Functional Block Diagram
- Page 2 Changed the A_{15L} & A_{15R} to NC in the 70V9179PF PN100 Pin Configuration and updated footnotes
- Page 3 Updated Left Port A_{15L} to A_{14L} & Right Port A_{15R} to A_{14R} in the Pin Names Table and updated the footnotes
- Page 6 Corrected a typo
- Pages 5 & 7 Removed the 6ns speed grade Commercial Only from the DC Electrical and the AC Electrical Tables
- Page 9 Corrected a typo
- Page 15 Changed the maximum number of addresses for A_{15} to A_{14} in the Depth and Width Expansion Diagram
- Page 16 Added Green and T&R indicators to and removed 6ns speed grade Commercial Only from Ordering Information

02/21/18:
- Product Discontinuation Notice - PDN# SP-17-02
- Last time buy expires June 15, 2018

02/18/20:
- Pages 1 - 18 Rebranded as Renesas datasheet
- Pages 1 & 16 Deleted obsolete Commercial speed grades 9/12ns and Industrial speed grade 9ns
- Page 2 Rotated PNG100 TQFP pin configuration to accurately reflect pin 1 orientation
- Page 16 Deleted Tape & Reel offering from Ordering Information
- Page 16 Added Orderable Part Information table

IMPORTANT NOTICE AND DISCLAIMER

RENESAS ELECTRONICS CORPORATION AND ITS SUBSIDIARIES (“RENESAS”) PROVIDES TECHNICAL SPECIFICATIONS AND RELIABILITY DATA (INCLUDING DATASHEETS), DESIGN RESOURCES (INCLUDING REFERENCE DESIGNS), APPLICATION OR OTHER DESIGN ADVICE, WEB TOOLS, SAFETY INFORMATION, AND OTHER RESOURCES “AS IS” AND WITH ALL FAULTS, AND DISCLAIMS ALL WARRANTIES, EXPRESS OR IMPLIED, INCLUDING, WITHOUT LIMITATION, ANY IMPLIED WARRANTIES OF MERCHANTABILITY, FITNESS FOR A PARTICULAR PURPOSE, OR NON-INFRINGEMENT OF THIRD PARTY INTELLECTUAL PROPERTY RIGHTS.

These resources are intended for developers skilled in the art designing with Renesas products. You are solely responsible for (1) selecting the appropriate products for your application, (2) designing, validating, and testing your application, and (3) ensuring your application meets applicable standards, and any other safety, security, or other requirements. These resources are subject to change without notice. Renesas grants you permission to use these resources only for development of an application that uses Renesas products. Other reproduction or use of these resources is strictly prohibited. No license is granted to any other Renesas intellectual property or to any third party intellectual property. Renesas disclaims responsibility for, and you will fully indemnify Renesas and its representatives against, any claims, damages, costs, losses, or liabilities arising out of your use of these resources. Renesas' products are provided only subject to Renesas' Terms and Conditions of Sale or other applicable terms agreed to in writing. No use of any Renesas resources expands or otherwise alters any applicable warranties or warranty disclaimers for these products.

(Rev.1.0 Mar 2020)

Corporate Headquarters

TOYOSU FORESIA, 3-2-24 Toyosu,
Koto-ku, Tokyo 135-0061, Japan
www.renesas.com

Contact Information

For further information on a product, technology, the most up-to-date version of a document, or your nearest sales office, please visit:
www.renesas.com/contact/

Trademarks

Renesas and the Renesas logo are trademarks of Renesas Electronics Corporation. All trademarks and registered trademarks are the property of their respective owners.

© 2020 Renesas Electronics Corporation. All rights reserved.