SIEMENS

Data sheet 3SU1200-2PV10-1AA0



Potentiometer, compact, 22 mm, round, plastic, black, 470k ohm, with holder, screw terminal

product brand name	SIRIUS ACT
product designation	Potentiometers
design of the product	Compact unit
product type designation	3SU1
product line	Plastic, black, 22 mm
manufacturer's article number of the supplied holder	3SU1500-0AA10-0AA0
Enclosure	
number of command points	1
Actuator	
design of the actuating element	Rotary knob
principle of operation of the actuating element	Infinitely variable adjustment, angle of rotation 280°
color of the actuating element	black
material of the actuating element	plastic
shape of the actuating element	round
outer diameter of the actuating element	30 mm
Maximum deflection angle [°]	280°
Front ring	
product component front ring	No
Holder	
material of the holder	Plastic
General technical data	
insulation voltage rated value	500 V
degree of pollution	3
protection class IP	IP66, IP67, IP69(IP69K)
● of the terminal	IP20, clamping screw tightened
degree of protection NEMA rating	1, 2, 3, 3R, 4, 4X, 12, 13
shock resistance	
● acc. to IEC 60068-2-27	Sinusoidal half-wave 50g / 11 ms
● for railway applications acc. to DIN EN 61373	Category 1, Class B
vibration resistance	
● acc. to IEC 60068-2-6	10 ... 500 Hz: 5g
● for railway applications acc. to DIN EN 61373	Category 1, Class B
mechanical service life (switching cycles) typical	25 000
reference code acc. to IEC 81346-2	S
Connections/ Terminals	
type of electrical connection	screw-type terminals
type of connectable conductor cross-sections	

Subject to change without notice
© Copyright Siemens

● solid with core end processing	2x (0.5 ... 0.75 mm²)
● solid without core end processing	2x (1.0 ... 1.5 mm²)
● finely stranded with core end processing	2x (0.5 ... 1.5 mm²)
● finely stranded without core end processing	2x (1,0 ... 1,5 mm²)
● at AWG cables	2x (18 ... 14)
tightening torque of the screws in the bracket	1 ... 1.2 N·m
● tightening torque with screw-type terminals	0.8 ... 1 N·m
Ambient conditions	
● ambient temperature during operation	-25 ... +70 °C
● ambient temperature during storage	-40 ... +80 °C
environmental category during operation acc. to IEC 60721	3M6, 3S2, 3B2, 3C3, 3K6 (with relative air humidity of 10 ... 95 %, no condensation in operation permitted for all devices behind front panel)
Installation/ mounting/ dimensions	
height	40 mm
width	30 mm
shape of the installation opening	round
mounting diameter	22.3 mm
positive tolerance of installation diameter	0.4 mm
mounting height	19.4 mm
installation width	30 mm
installation depth	46 mm

Certificates/ approvals

General Product Approval	Declaration of Conformity	Test Certificates
CSA UL EAC	Miscellaneous CE EG-Konf.	Type Test Certificates/Test Report

other

Confirmation

Further information

Information- and Downloadcenter (Catalogs, Brochures,…)
https://www.siemens.com/ic10
Industry Mall (Online ordering system)
https://mall.industry.siemens.com/mall/en/en/Catalog/product?mlfb=3SU1200-2PV10-1AA0
Cax online generator
http://support.automation.siemens.com/WW/CAXorder/default.aspx?lang=en&mlfb=3SU1200-2PV10-1AA0
Service&Support (Manuals, Certificates, Characteristics, FAQs,...)
https://support.industry.siemens.com/cs/ww/en/ps/3SU1200-2PV10-1AA0
Image database (product images, 2D dimension drawings, 3D models, device circuit diagrams, EPLAN macros, ...)
http://www.automation.siemens.com/bilddb/cax_de.aspx?mlfb=3SU1200-2PV10-1AA0&lang=en

Subject to change without notice
© Copyright Siemens

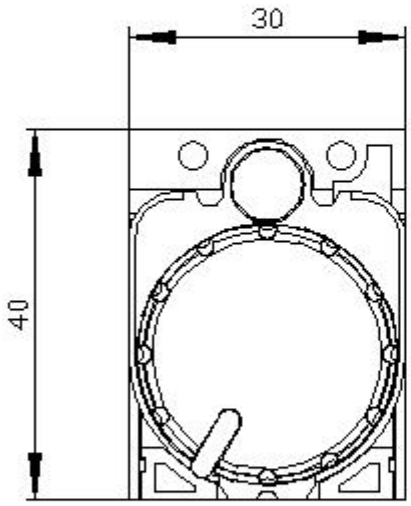

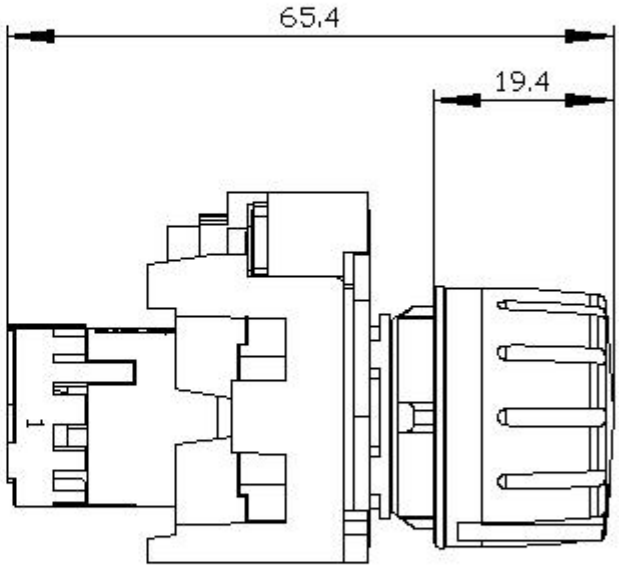

Subject to change without notice
© Copyright Siemens

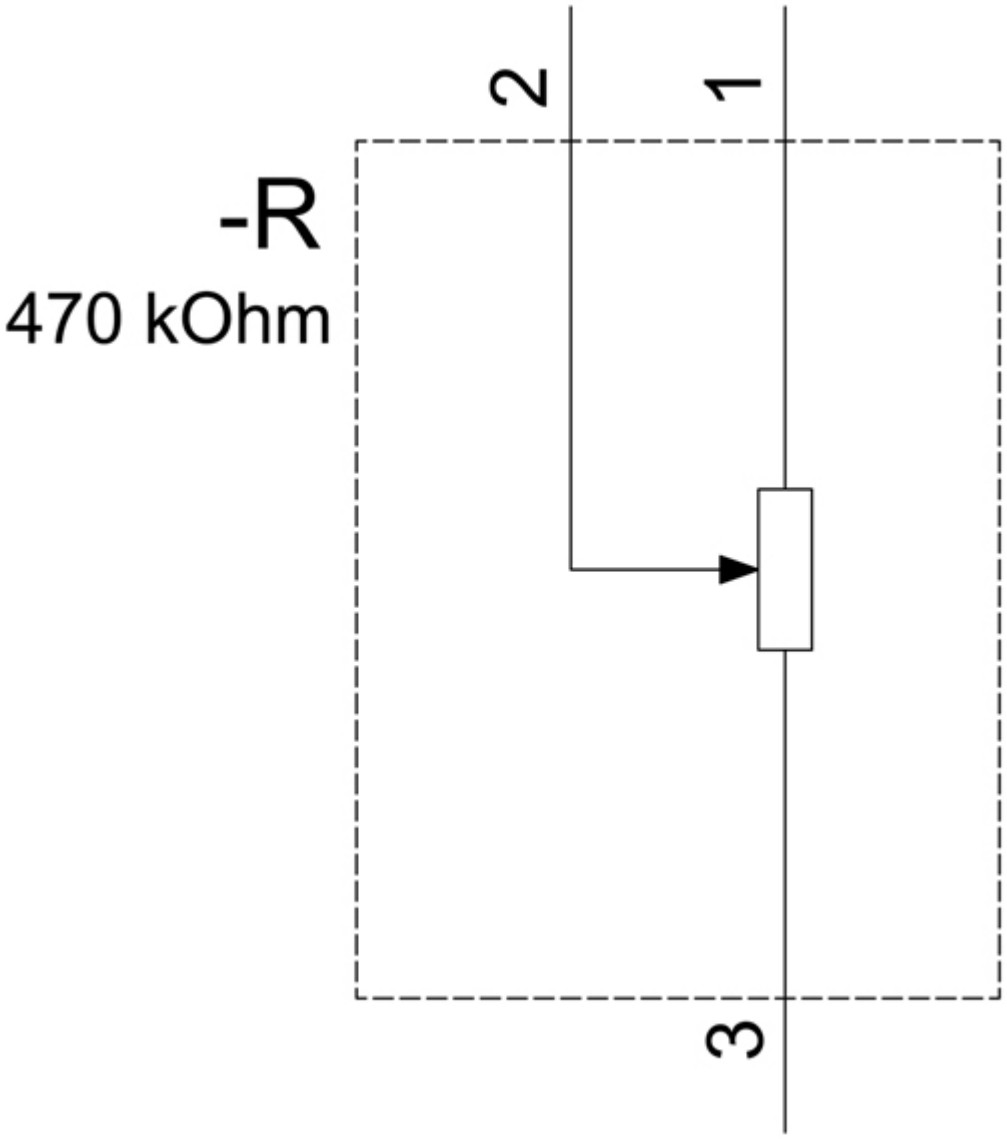

last modified: 12/16/2020

Subject to change without notice
© Copyright Siemens