FEATURES SELECTION GUIDE

CIRCUIT SIZE	FEATURES				
	FRICTION LOCKS		③ DUAL SIDE SLOTS	④ CENTER POLARIZATION	SHEET NO
	① DUAL	②CENTER			
4 TO 6	N.A	N.A	YES	N.A	2 - 3
	N.A	YES	YES	N.A	
8 TO 12	N.A	N.A	YES	YES	4 - 5
	N.A	YES	YES	N.A	
14 TO 50	YES	N.A	YES	YES	6 - 9
	N.A	N.A	YES	YES	

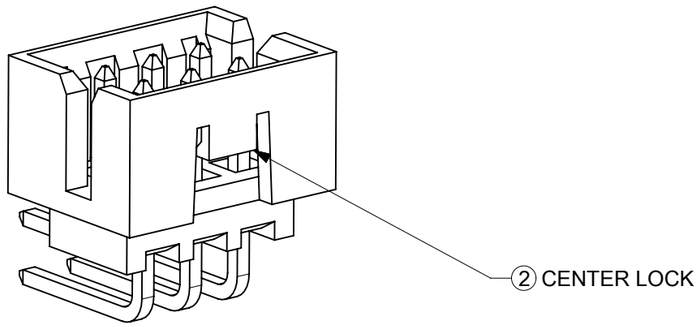

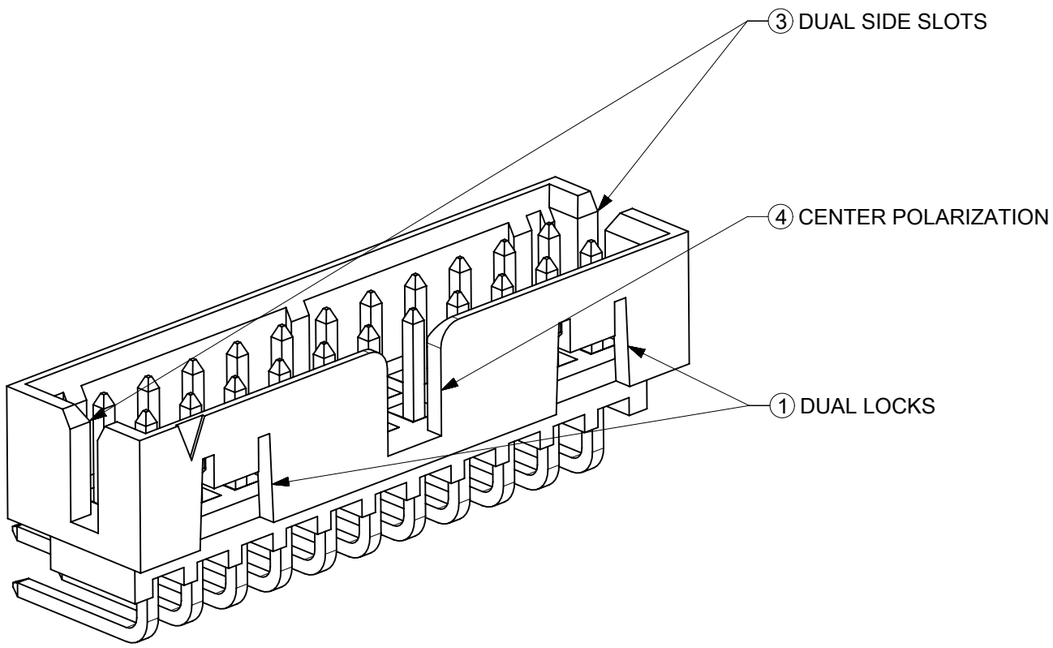

PACKAGING SPECIFICATION TABLE

TAPE AND REEL PACKAGING	PK-87831-300
TUBE STANDARD PACKAGING	PK-87831-001
TUBE NON-STANDARD PACKAGING FOR: 87833-0861 87833-1420	PK-87831-002

THIS DRAWING CONTAINS INFORMATION THAT IS PROPRIETARY TO MOLEX ELECTRONIC TECHNOLOGIES, LLC AND SHOULD NOT BE USED WITHOUT WRITTEN PERMISSION

EC NO: 718010 2022/08/26
DRWN: DANUSA 2022/09/19
CHK'D: DANUSA 2022/09/19
APPR: MRAMAKRISHNA

GENERAL TOLERANCES (UNLESS SPECIFIED)

	MM	INCH
4 PLACES	±	±
3 PLACES	±	±
2 PLACES	± 0.2	±
1 PLACES	±	±
0 PLACES	±	±
ANGULAR TOL ± 3.0		

DRAFT WHERE APPLICABLE MUST REMAIN WITHIN DIMENSIONS

REV A13

DIMENSION UNITS: MM
SCALE: NTS
DRWN BY: GMENARLY DATE: 2015/09/29
CHK'D BY: CGOH DATE: 2015/10/30
APPR BY: KHLIM DATE: 2015/11/03
DRAWING SIZE: A3
THIRD ANGLE PROJECTION

molex®

MILLIGRID, 2MM PITCH
SHROUDED HEADER R/A, THROUGH HOLE

PRODUCT CUSTOMER DRAWING

SERIES	MATERIAL NUMBER	CUSTOMER
87833	SEE TABLE	GENERAL MARKET

DOCUMENT NUMBER	DOC TYPE	DOC PART	SHEET NUMBER
SD-87833-0001	PSD	001	1 OF 9

RELEASE STATUS	P1	RELEASE DATE	2022/09/19 07:59:04

FORMAT: Met-lega-master-tb-prod-A3
REVISION: C
DATE: 2017/02/06

4 TO 6 CIRCUITS

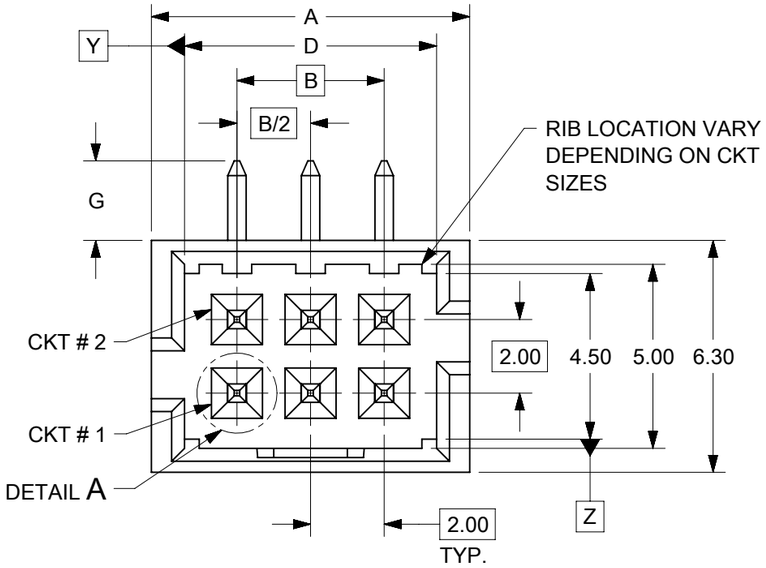

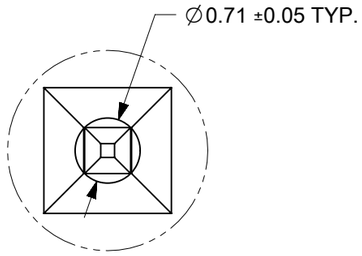

DETAIL A

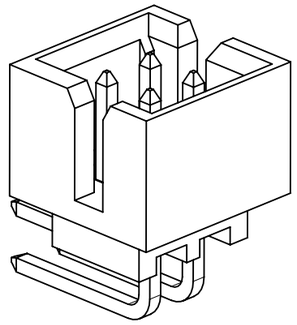

ISO VIEW OF HEADER
DUAL SIDE SLOTS

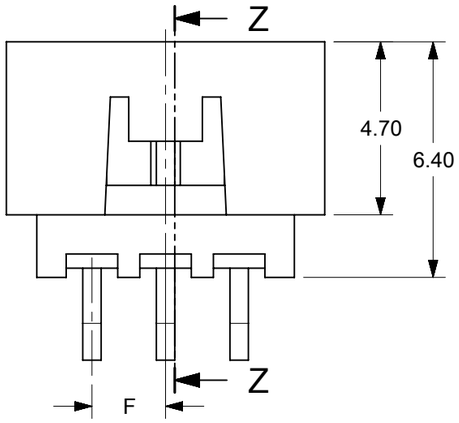

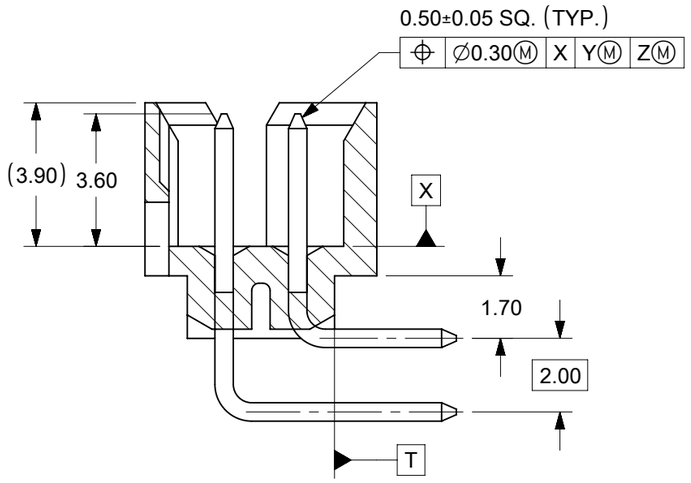

SECTION Z-Z

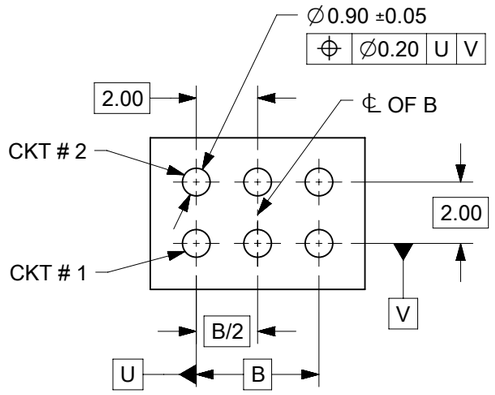

RECOMMENDED PCB LAYOUT

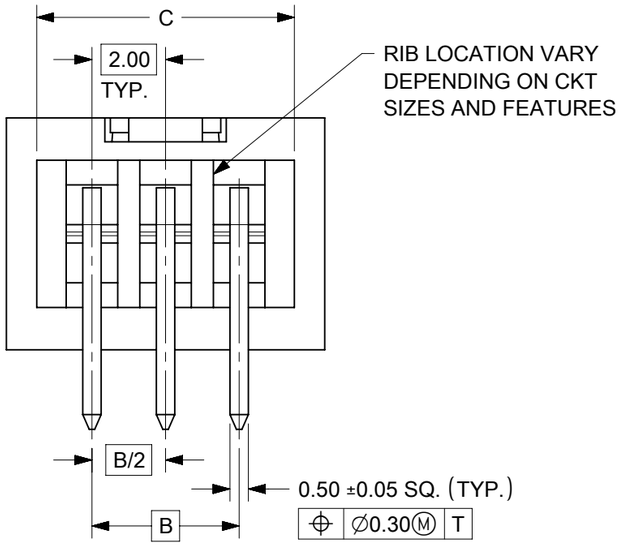

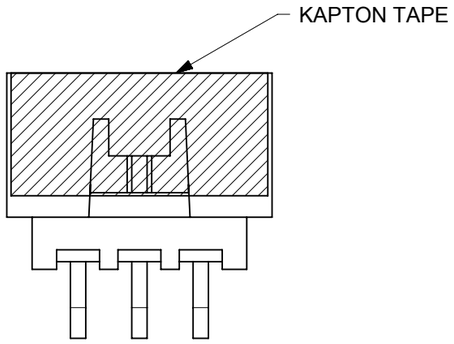

NOTES:
1. MATERIALS:
   HOUSING: 30% GF, NYLON, UL94V-0, COLOR: BLACK.
   PIN: 0.50mm SQ. PHOSPHOR BRONZE.
2. FINISHES: REFER TO PLATING OPTIONS.
3. PRODUCT SPECIFICATION: PS-87831-027
4. PACKAGING SPECIFICATION: SEE PACKAGING SPECS TABLE ON SHEET 1
5. MATES WITH: A. MOLEX CRIMP RECEPTACLE HOUSING: 51110 SERIES
   AND CRIMP TERMINAL: 50394 SERIES.
   B. MOLEX 2MM MILLIGRID DUAL ROW IDT: 87568 SERIES.
   C. MOLEX 2MM MILLIGRID DUAL ROW RECEPTACLE:
   79107 (GOLD PLATED), 78787 (TIN PLATED)
6. FOR ILLUSTRATION PURPOSE, 6 CIRCUITS HEADER IS SHOWN.

THIS DRAWING CONTAINS INFORMATION THAT IS PROPRIETARY TO MOLEX ELECTRONIC TECHNOLOGIES, LLC AND SHOULD NOT BE USED WITHOUT WRITTEN PERMISSION

EC NO: 718010	DRWN: DANUSA	2022/08/26
CHK'D: DANUSA	APPR: MRAMAKRISHNA	2022/09/19
		2022/09/19

GENERAL TOLERANCES (UNLESS SPECIFIED)

	MM	INCH
4 PLACES	±	±
3 PLACES	±	±
2 PLACES	± 0.2	±
1 PLACES	±	±
0 PLACES	±	±

ANGULAR TOL ± 3.0

DRAFT WHERE APPLICABLE MUST REMAIN WITHIN DIMENSIONS

A13 REV

DIMENSION UNITS	MM
SCALE	NTS
DRWN BY	GMENARLY
DATE	2015/09/29
CHK'D BY	CGOH
DATE	2015/10/30
APPR BY	KHLIM
DATE	2015/11/03
DRAWING SIZE	A3
THIRD ANGLE PROJECTION	

molex®

MILLIGRID, 2MM PITCH
SHROUDED HEADER R/A, THROUGH HOLE

PRODUCT CUSTOMER DRAWING

SERIES	MATERIAL NUMBER	CUSTOMER
87833	SEE TABLE	GENERAL MARKET

DOCUMENT NUMBER	DOC TYPE	DOC PART	SHEET NUMBER
SD-87833-0001	PSD	001	2 OF 9

RELEASE STATUS	P1	RELEASE DATE	2022/09/19 07:59:04

FORMAT: Met-lega-master-tb-prod-A3
REVISION: C
DATE: 2017/02/06

4 TO 6 CIRCUITS

CKT SIZE	ASSY. P/N WITHOUT KAPTON IN TUBE	ASSY. P/N WITH KAPTON IN TUBE	ASSY. P/N WITH KAPTON IN T&R	PLATING OPTIONS	FRICTION LOCKS		DUAL SIDE SLOTS	CENTER POLARIZATION	DIMENSION						
					DUAL	CENTER			A	B	C	D	E	F	G (SOLDER TAIL)
4	87833-0419	N.A	N.A	1	N.A	N.A	YES	N.A	6.65	2.00	5.00	4.85	N.A	N.A	2.16
	87833-0420	N.A	N.A	2											
	87833-0421	N.A	N.A	3											
	87833-5920	N.A	N.A	2	N.A	N.A	YES	N.A						N.A	3.18
	87833-0431	87833-0441	87833-0451	2	N.A	YES	YES	N.A						1.00	2.16
	87833-0432	N.A	N.A	3											
	87833-0461	N.A	N.A	2	N.A	YES	YES	N.A						1.00	3.18
6	87833-0619	N.A	N.A	1	N.A	N.A	YES	N.A	8.65	4.00	7.00	6.85	N.A	N.A	2.16
	87833-0620	N.A	87833-0626	2											
	87833-0621	N.A	N.A	3											
	87833-6420	N.A	N.A	2	N.A	N.A	YES	N.A						N.A	3.18
	87833-0631	87833-0641	87833-0651	2	N.A	YES	YES	N.A						2.00	2.16
	87833-0632	N.A	N.A	3											
	87833-0661	N.A	N.A	2	N.A	YES	YES	N.A						2.00	3.18
	87833-0624	N.A	N.A	2	N.A	N.A	YES	N.A						N.A	2.92
	87833-0625	N.A	N.A	3											

PLATING OPTIONS:

1 - 0.05-0.13µm/2-5µin GOLD IN CONTACT AREA AND
1.88µm/75µin MIN. MATTE TIN IN SOLDER TAIL AREA OVER
1.27µm/50µin MIN. NICKEL OVERALL.

2 - 0.38µm/15µin MIN. GOLD IN CONTACT AREA AND
1.88µm/75µin MIN. MATTE TIN IN SOLDER TAIL AREA OVER
1.27µm/50µin MIN. NICKEL OVERALL.

3 - 0.76µm/30µin MIN. GOLD IN CONTACT AREA AND
1.88µm/75µin MIN. MATTE TIN IN SOLDER TAIL AREA OVER
1.27µm/50µin MIN. NICKEL OVERALL.

THIS DRAWING CONTAINS INFORMATION THAT IS PROPRIETARY TO MOLEX ELECTRONIC TECHNOLOGIES, LLC AND SHOULD NOT BE USED WITHOUT WRITTEN PERMISSION

EC NO: 718010 2022/08/26
DRWN: DANUSA 2022/09/19
CHK'D: DANUSA 2022/09/19
APPR: MRAMAKRISHNA

GENERAL TOLERANCES (UNLESS SPECIFIED)

	MM	INCH
4 PLACES	±	±
3 PLACES	±	±
2 PLACES	± 0.2	±
1 PLACES	±	±
0 PLACES	±	±

ANGULAR TOL ± 3.0

DRAFT WHERE APPLICABLE MUST REMAIN WITHIN DIMENSIONS

A13 REV

DIMENSION UNITS: MM
SCALE: NTS
DRWN BY: GMENARLY DATE: 2015/09/29
CHK'D BY: CGOH DATE: 2015/10/30
APPR BY: KHLIM DATE: 2015/11/03
DRAWING SIZE: A3
THIRD ANGLE PROJECTION

molex®

MILLIGRID, 2MM PITCH
SHROUDED HEADER R/A, THROUGH HOLE

PRODUCT CUSTOMER DRAWING

SERIES	MATERIAL NUMBER	CUSTOMER
87833	SEE TABLE	GENERAL MARKET

DOCUMENT NUMBER	DOC TYPE	DOC PART	SHEET NUMBER
SD-87833-0001	PSD	001	3 OF 9

RELEASE STATUS	P1	RELEASE DATE	2022/09/19 07:59:04

FORMAT: Met-lega-master-tb-prod-A3
REVISION: C
DATE: 2017/02/06

8 TO 12 CIRCUITS

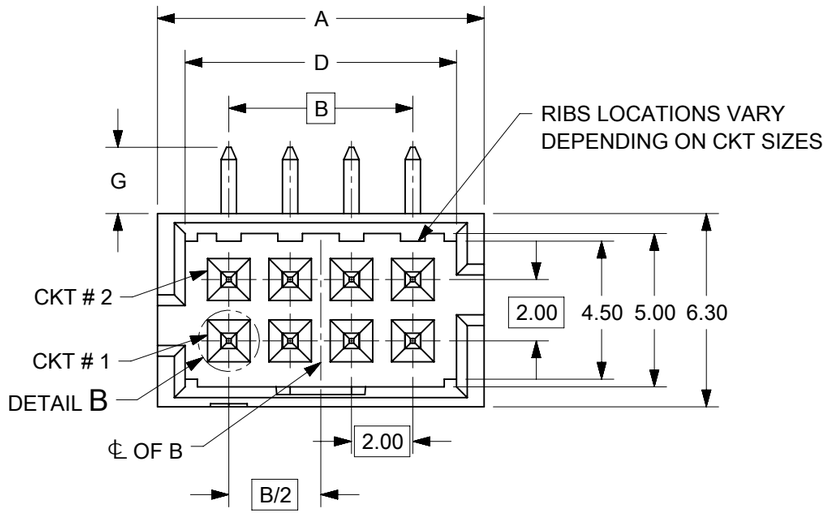

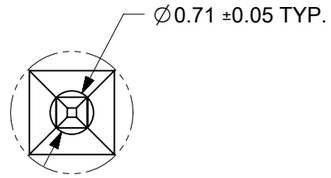

DETAIL B

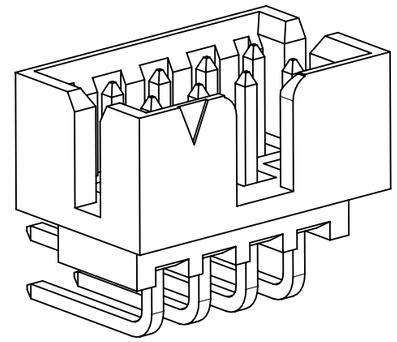

ISO VIEW OF HEADER WITH CENTER POLARIZATION AND DUAL SIDE SLOTS

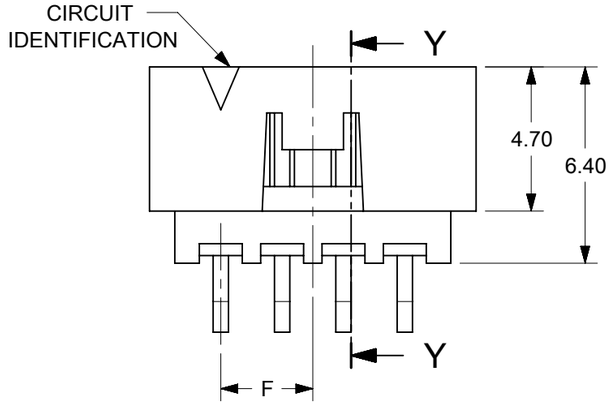

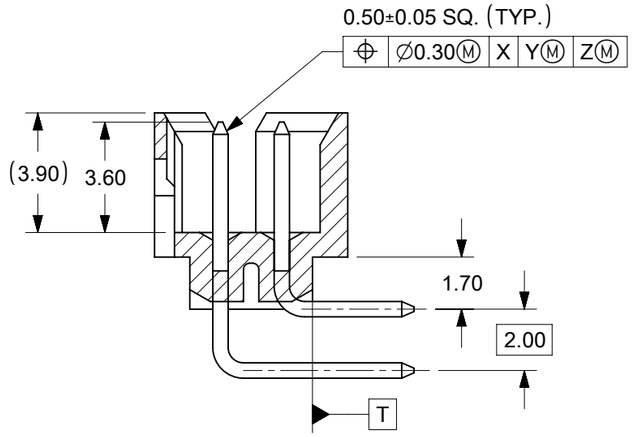

SECTION Y-Y

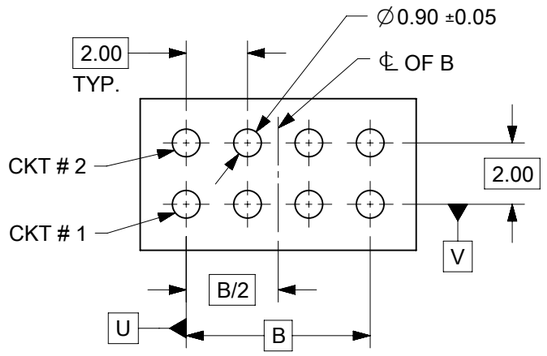

RECOMMENDED PCB LAYOUT

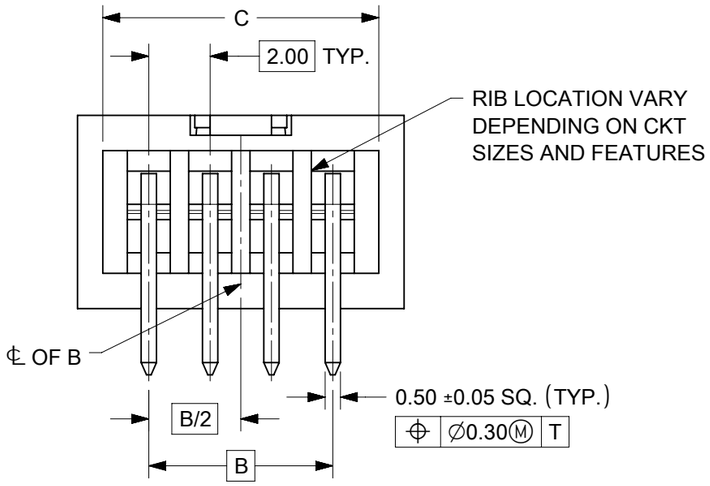

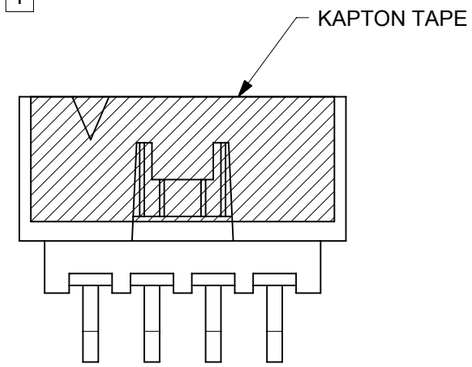

NOTES:
1. MATERIALS:
   HOUSING: 30% GF, NYLON, UL94V-0, COLOR: BLACK
   PIN: 0.50mm SQ. PHOSPHOR BRONZE.
2. FINISHES: REFER TO PLATING OPTIONS.
3. PRODUCT SPECIFICATION: PS-87831-027
4. PACKAGING SPECIFICATION: SEE PACKAGING SPECS TABLE ON SHEET 1
5. MATES WITH: A. MOLEX CRIMP RECEPTACLE HOUSING: 51110 SERIES AND CRIMP TERMINAL: 50394 SERIES.
   B. MOLEX 2mm MILLIGRID DUAL ROW IDT: 87568 SERIES.
   C. MOLEX 2mm MILLIGRID DUAL ROW RECEPTACLE: 79107 (GOLD PLATED), 78787 (TIN PLATED)
6. FOR ILLUSTRATION PURPOSE, 8 CIRCUIT HEADER IS SHOWN.

THIS DRAWING CONTAINS INFORMATION THAT IS PROPRIETARY TO MOLEX ELECTRONIC TECHNOLOGIES, LLC AND SHOULD NOT BE USED WITHOUT WRITTEN PERMISSION

EC NO: 718010	DRWN: DANUSA	2022/08/26
CHK'D: DANUSA		2022/09/19
APPR: MRAMAKRISHNA		2022/09/19
REV A13		

GENERAL TOLERANCES (UNLESS SPECIFIED)

	MM	INCH
4 PLACES	±	±
3 PLACES	±	±
2 PLACES	± 0.2	±
1 PLACES	±	±
0 PLACES	±	±

ANGULAR TOL ± 3.0

DRAFT WHERE APPLICABLE MUST REMAIN WITHIN DIMENSIONS

DIMENSION UNITS	SCALE
MM	NTS
DRWN BY: GMENARLY	DATE: 2015/09/29
CHK'D BY: CGOH	DATE: 2015/10/30
APPR BY: KHLIM	DATE: 2015/11/03
DRAWING SIZE: A3	THIRD ANGLE PROJECTION

molex®

MILLIGRID, 2MM PITCH
SHROUDED HEADER R/A, THROUGH HOLE

PRODUCT CUSTOMER DRAWING

SERIES	MATERIAL NUMBER	CUSTOMER
87833	SEE TABLE	GENERAL MARKET

DOCUMENT NUMBER	DOC TYPE	DOC PART	SHEET NUMBER
SD-87833-0001	PSD	001	4 OF 9

RELEASE STATUS	P1	RELEASE DATE	2022/09/19 07:59:04

FORMAT: Met-lega-master-tb-prod-A3
REVISION: C
DATE: 2017/02/06

8 TO 12 CIRCUITS

CKT SIZE	ASSY. P/N WITHOUT KAPTON IN TUBE	ASSY. P/N WITH KAPTON IN TUBE	ASSY. P/N WITH KAPTON IN T&R	PLATING OPTIONS	FRICTION LOCKS		DUAL SIDE SLOTS	CENTER POLARIZATION	DIMENSION						
					DUAL	CENTER			A	B	C	D	E	F	G (SOLDER TAIL)
8	87833-0819	N.A	N.A	1	N.A	N.A	YES	YES	10.65	6.00	9.00	8.85	N.A	N.A	2.16
	87833-0820	N.A	N.A	2											
	87833-0821	N.A	87833-7621	3											
	87833-6320	N.A	N.A	2	N.A	N.A	YES	YES						N.A	3.18
	87833-6321	N.A	N.A	3											
	87833-0831	87833-0841	87833-0851	2	N.A	YES	YES	N.A						3.00	2.16
	87833-0832	N.A	N.A	3											
	87833-0861	N.A	N.A	2	N.A	YES	YES	N.A						3.00	3.18
	87833-0824	N.A	N.A	2	N.A	N.A	YES	YES						N.A	2.92
	87833-0825	N.A	N.A	3											
10	87833-1019	N.A	N.A	1	N.A	N.A	YES	YES	12.65	8.00	11.00	10.85	N.A	N.A	2.16
	87833-1020	N.A	(A13) 87833-1026	2											
	87833-1021	N.A	N.A	3											
	87833-1031	N.A	87833-1027	2	N.A	YES	YES	N.A						4.00	2.16
	87833-1032	N.A	N.A	3											
	N.A	87833-1041	87833-1051	2	N.A	YES	YES	N.A						4.00	1.70
	87833-1024	N.A	N.A	2	N.A	N.A	YES	YES						N.A	2.92
	87833-1025	N.A	N.A	3											
12	87833-1219	N.A	N.A	1	N.A	N.A	YES	YES	14.65	10.00	13.00	12.85	N.A	N.A	2.16
	87833-1220	N.A	87833-1240	2											
	87833-1221	N.A	N.A	3											
	87833-6020	N.A	N.A	2	N.A	N.A	YES	YES						N.A	3.18
	87833-1231	N.A	N.A	2	N.A	YES	YES	N.A						5.00	2.16
	87833-1232	N.A	N.A	3											
	87833-1224	N.A	N.A	2	N.A	N.A	YES	YES						N.A	2.92
	87833-1225	N.A	N.A	3											

PLATING OPTIONS:

1 - 0.05-0.13µm/2-5µin GOLD IN CONTACT AREA AND 1.88µm/75µin MIN. MATTE TIN IN SOLDER TAIL AREA OVER 1.27µm/50µin MIN. NICKEL OVERALL.

2 - 0.38µm/15µin MIN. GOLD IN CONTACT AREA AND 1.88µm/75µin MIN. MATTE TIN IN SOLDER TAIL AREA OVER 1.27µm/50µin MIN. NICKEL OVERALL.

3 - 0.76µm/30µin MIN. GOLD IN CONTACT AREA AND 1.88µm/75µin MIN. MATTE TIN IN SOLDER TAIL AREA OVER 1.27µm/50µin MIN. NICKEL OVERALL.

RELEASE STATUS	P1	RELEASE DATE	2022/09/19 07:59:04

THIS DRAWING CONTAINS INFORMATION THAT IS PROPRIETARY TO MOLEX ELECTRONIC TECHNOLOGIES, LLC AND SHOULD NOT BE USED WITHOUT WRITTEN PERMISSION

EC NO: 718010 2022/08/26
DRWN: DANUSA 2022/09/19
CHK'D: DANUSA 2022/09/19
APPR: MRAMAKRISHNA

REV: A13

GENERAL TOLERANCES (UNLESS SPECIFIED)

	MM	INCH
4 PLACES	±	±
3 PLACES	±	±
2 PLACES	± 0.2	±
1 PLACES	±	±
0 PLACES	±	±

ANGULAR TOL ± 3.0

DRAFT WHERE APPLICABLE MUST REMAIN WITHIN DIMENSIONS

DIMENSION UNITS: MM
SCALE: NTS
DRWN BY: GMENARLY DATE: 2015/09/29
CHK'D BY: CGOH DATE: 2015/10/30
APPR BY: KHLIM DATE: 2015/11/03
DRAWING SIZE: A3
THIRD ANGLE PROJECTION

molex®

MILLIGRID, 2MM PITCH
SHROUDED HEADER R/A, THROUGH HOLE

PRODUCT CUSTOMER DRAWING

SERIES	MATERIAL NUMBER	CUSTOMER
87833	SEE TABLE	GENERAL MARKET

DOCUMENT NUMBER	DOC TYPE	DOC PART	SHEET NUMBER
SD-87833-0001	PSD	001	5 OF 9

14 TO 50 CIRCUITS

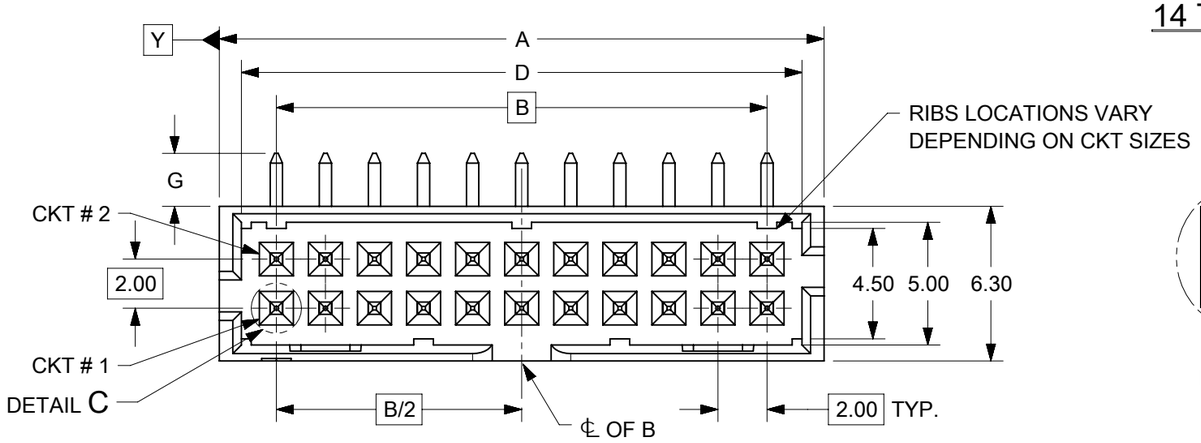

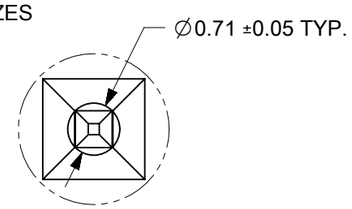

DETAIL C

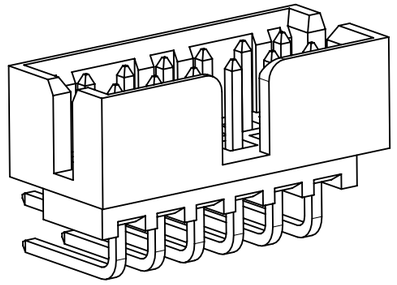

ISO VIEW OF HEADER WITH CENTER POLARIZATION AND DUAL SIDE SLOTS

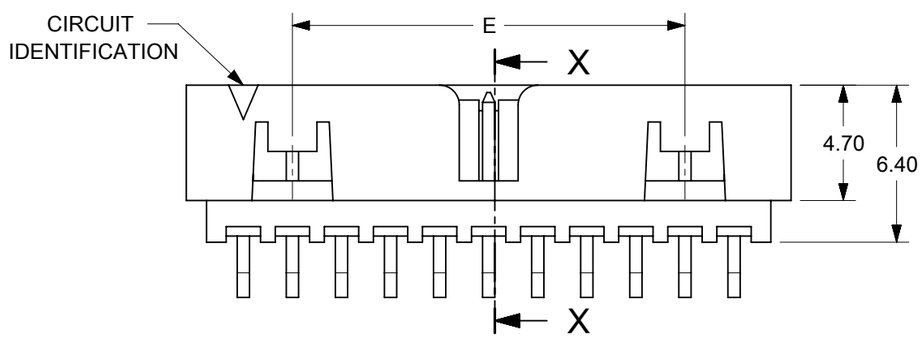

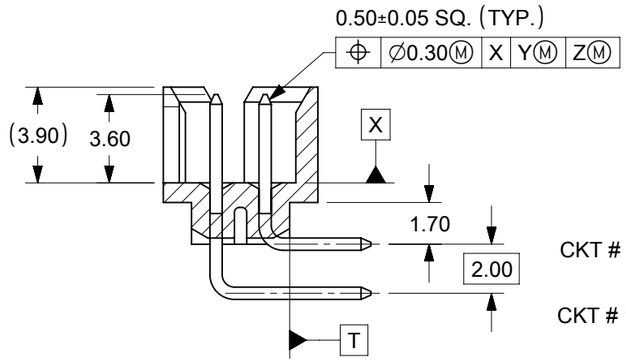

SECTION X-X

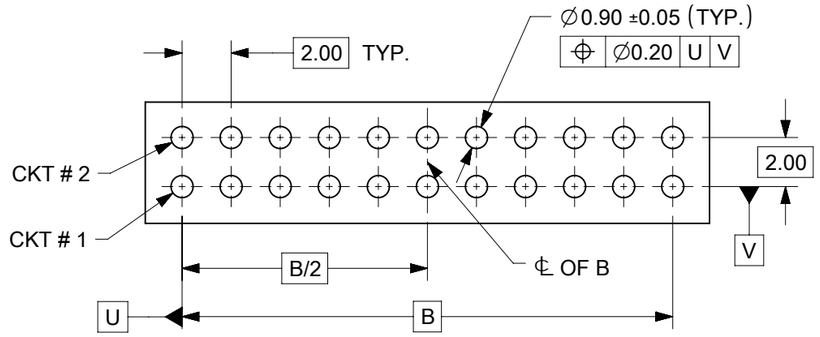

RECOMMENDED PCB LAYOUT

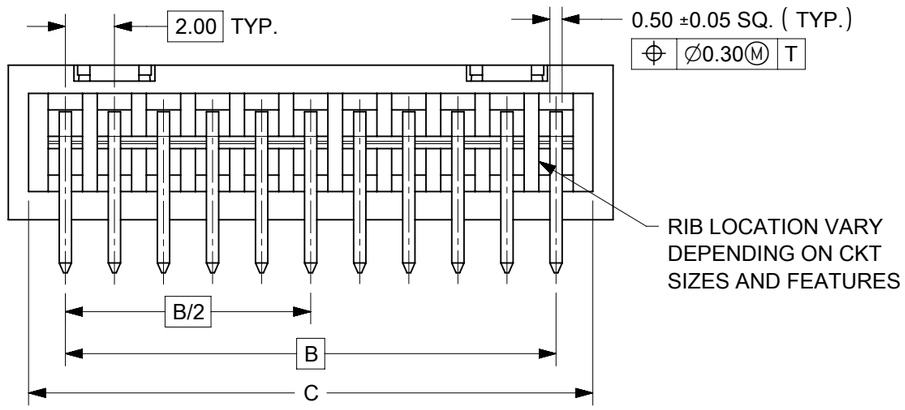

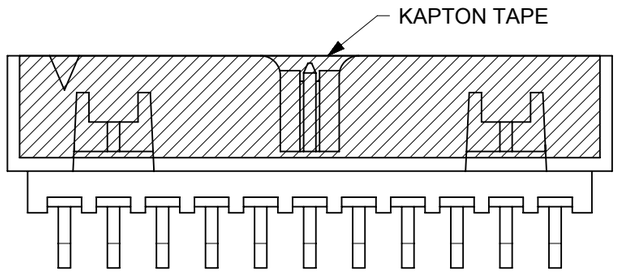

NOTES:
1. MATERIALS:
   HOUSING: 30% GF, NYLON, UL94V-0, COLOR: BLACK.
   PIN: 0.50mm SQ PHOSPHOR BRONZE.
2. FINISHES: REFER TO PLATING OPTIONS.
3. PRODUCT SPECIFICATION: PS-87831-027
4. PACKAGING SPECIFICATION: SEE PACKAGING SPECS TABLE ON SHEET 1
5. MATES WITH: A. MOLEX CRIMP RECEPTACLE HOUSING: 51110 SERIES
   AND CRIMP TERMINAL: 50394 SERIES.
   B. MOLEX 2mm MILLIGRID DUAL ROW IDT: 87568 SERIES.
   C. MOLEX 2mm MILLIGRID DUAL ROW RECEPTACLE:
   79107 (GOLD PLATED), 78787 (TIN PLATED)
6. FOR ILLUSTRATION PURPOSE, 22 CIRCUITS HEADER IS SHOWN.

RELEASE STATUS	P1	RELEASE DATE	2022/09/19 07:59:04

THIS DRAWING CONTAINS INFORMATION THAT IS PROPRIETARY TO MOLEX ELECTRONIC TECHNOLOGIES, LLC AND SHOULD NOT BE USED WITHOUT WRITTEN PERMISSION

EC NO: 718010	DRWN: DANUSA	2022/08/26
CHK'D: DANUSA	APPR: MRAMAKRISHNA	2022/09/19
		2022/09/19

GENERAL TOLERANCES (UNLESS SPECIFIED)

	MM	INCH
4 PLACES	±	±
3 PLACES	±	±
2 PLACES	± 0.2	±
1 PLACES	±	±
0 PLACES	±	±

ANGULAR TOL ± 3.0

DRAFT WHERE APPLICABLE MUST REMAIN WITHIN DIMENSIONS

A13 REV

DIMENSION UNITS	SCALE
MM	NTS
DRWN BY: GMENARLY	DATE: 2015/09/29
CHK'D BY: CGOH	DATE: 2015/10/30
APPR BY: KHLIM	DATE: 2015/11/03
DRAWING SIZE: A3	THIRD ANGLE PROJECTION

molex®

MILLIGRID, 2MM PITCH
SHROUDED HEADER R/A, THROUGH HOLE

PRODUCT CUSTOMER DRAWING

SERIES	MATERIAL NUMBER	CUSTOMER
87833	SEE TABLE	GENERAL MARKET

DOCUMENT NUMBER	DOC TYPE	DOC PART	SHEET NUMBER
SD-87833-0001	PSD	001	6 OF 9

FORMAT: Met-lega-master-tb-prod-A3
REVISION: C
DATE: 2017/02/06

14 TO 24 CIRCUITS

CKT SIZE	ASSY. P/N WITHOUT KAPTON IN TUBE	ASSY. P/N WITH KAPTON IN TUBE	ASSY. P/N WITH KAPTON IN T&R	ASSY. P/N WITHOUT KAPTON IN T&R	PLATING OPTIONS	FRICTION LOCKS		DUAL SIDE SLOTS	CENTER POLARIZATION	DIMENSION						
						DUAL	CENTER			A	B	C	D	E	F	G (SOLDER TAIL)
14	87833-1419	N.A	N.A	N.A	1	YES	N.A	YES	YES	16.65	12.00	15.00	14.85	8.00	N.A	2.16
	87833-1420	N.A	N.A	N.A	2											
	87833-1421	N.A	N.A	N.A	3											
	87833-5320	N.A	N.A	N.A	2	YES	N.A	YES	YES							3.18
	87833-5321	N.A	N.A	N.A	3											
	87833-1436	N.A	N.A	N.A	3	YES	N.A	YES	YES							3.50
	N.A	N.A	87833-7420	N.A	2	YES	N.A	YES	YES							1.70
16	87833-1619	N.A	N.A	N.A	1	YES	N.A	YES	YES	18.65	14.00	17.00	16.85	10.00	N.A	2.16
	87833-1620	N.A	N.A	N.A	2											
	87833-1621	N.A	87833-7821	N.A	3											
	87833-6120	N.A	87833-7120	N.A	2	YES	N.A	YES	YES							3.18
18	87833-1819	N.A	N.A	N.A	1	YES	N.A	YES	YES	20.65	16.00	19.00	18.85	12.00	N.A	2.16
	87833-1820	N.A	N.A	N.A	2											
	87833-1821	N.A	N.A	N.A	3											
	87833-6220	N.A	N.A	N.A	2	YES	N.A	YES	YES							3.18
20	87833-2019	N.A	N.A	N.A	1	YES	N.A	YES	YES	22.65	18.00	21.00	20.85	14.00	N.A	2.16
	87833-2020	N.A	87833-7220	N.A	2											
	87833-2021	N.A	N.A	N.A	3											
	87833-6520	N.A	N.A	N.A	2	YES	N.A	YES	YES							3.18
	87833-6521	N.A	N.A	87833-2037	3											
	87833-2036	N.A	N.A	N.A	3	YES	N.A	YES	YES							3.50
22	87833-2219	N.A	N.A	N.A	1	YES	N.A	YES	YES	24.65	20.00	23.00	22.85	16.00	N.A	2.16
	87833-2220	N.A	N.A	N.A	2											
	87833-2221	N.A	N.A	N.A	3											
24	87833-2419	N.A	N.A	N.A	1	YES	N.A	YES	YES	26.65	22.00	25.00	24.85	18.00	N.A	2.16
	87833-2420	N.A	87833-7020	N.A	2											
	87833-2421	N.A	N.A	N.A	3											
	87833-7320	N.A	N.A	N.A	2	YES	N.A	YES	YES							2.00
	87833-2436	N.A	N.A	N.A	3	YES	N.A	YES	YES							3.50
	87833-6920	N.A	N.A	N.A	2	YES	N.A	YES	YES							3.27

PLATING OPTIONS:

1 - 0.05-0.13µm/2-5µin GOLD IN CONTACT AREA AND 1.88µm/75µin MIN. MATTE TIN IN SOLDER TAIL AREA OVER 1.27µm/50µin MIN. NICKEL OVERALL.

2 - 0.38µm/15µin MIN. GOLD IN CONTACT AREA AND 1.88µm/75µin MIN. MATTE TIN IN SOLDER TAIL AREA OVER 1.27µm/50µin MIN. NICKEL OVERALL.

3 - 0.76µm/30µin MIN. GOLD IN CONTACT AREA AND 1.88µm/75µin MIN. MATTE TIN IN SOLDER TAIL AREA OVER 1.27µm/50µin MIN. NICKEL OVERALL.

THIS DRAWING CONTAINS INFORMATION THAT IS PROPRIETARY TO MOLEX ELECTRONIC TECHNOLOGIES, LLC AND SHOULD NOT BE USED WITHOUT WRITTEN PERMISSION

EC NO: 718010 2022/08/26
DRWN: DANUSA 2022/09/19
CHK'D: DANUSA 2022/09/19
APPR: MRAMAKRISHNA

GENERAL TOLERANCES (UNLESS SPECIFIED)

	MM	INCH
4 PLACES	±	±
3 PLACES	±	±
2 PLACES	± 0.2	±
1 PLACES	±	±
0 PLACES	±	±

ANGULAR TOL ± 3.0

DRAFT WHERE APPLICABLE MUST REMAIN WITHIN DIMENSIONS

REV A13

DIMENSION UNITS: MM
SCALE: NTS
DRWN BY: GMENARLY DATE: 2015/09/29
CHK'D BY: CGOH DATE: 2015/10/30
APPR BY: KHLIM DATE: 2015/11/03
DRAWING SIZE: A3
THIRD ANGLE PROJECTION

molex®

MILLIGRID, 2MM PITCH
SHROUDED HEADER R/A, THROUGH HOLE

PRODUCT CUSTOMER DRAWING

SERIES	MATERIAL NUMBER	CUSTOMER
87833	SEE TABLE	GENERAL MARKET

DOCUMENT NUMBER	DOC TYPE	DOC PART	SHEET NUMBER
SD-87833-0001	PSD	001	7 OF 9

RELEASE STATUS	P1	RELEASE DATE	2022/09/19 07:59:04

FORMAT: Met-lega-master-tb-prod-A3
REVISION: C
DATE: 2017/02/06

26 TO 38 CIRCUITS

CKT SIZE	ASSY. P/N WITHOUT KAPTON IN TUBE	ASSY. P/N WITH KAPTON IN TUBE	ASSY. P/N WITH KAPTON IN T&R	PLATING OPTIONS	FRICTION LOCKS		DUAL SIDE SLOTS	CENTER POLARIZATION	DIMENSION						
					DUAL	CENTER			A	B	C	D	E	F	G (SOLDER TAIL)
26	87833-2619	N.A	N.A	1	YES	N.A	YES	YES	28.65	24.00	27.00	26.85	20.00	N.A	2.16
	87833-2620	N.A	N.A	2											
	87833-2621	N.A	N.A	3											
	87833-2636	N.A	N.A	3	YES	N.A	YES	YES							3.50
28	87833-2819	N.A	N.A	1	YES	N.A	YES	YES	30.65	26.00	29.00	28.85	22.00	N.A	2.16
	87833-2820	N.A	N.A	2											
	87833-2821	N.A	N.A	3											
	87833-6620	N.A	N.A	2	YES	N.A	YES	YES							3.18
30	87833-3019	N.A	N.A	1	YES	N.A	YES	YES	32.65	28.00	31.00	30.85	24.00	N.A	2.16
	87833-3020	N.A	N.A	2											
	87833-3021	N.A	N.A	3											
	87833-6720	N.A	N.A	2	YES	N.A	YES	YES							3.18
	87833-6721	N.A	N.A	3											
	87833-3036	N.A	N.A	3	YES	N.A	YES	YES							3.50
32	87833-3219	N.A	N.A	1	YES	N.A	YES	YES	34.65	30.00	33.00	32.85	26.00	N.A	2.16
	87833-3220	N.A	N.A	2											
	87833-3221	N.A	N.A	3											
34	87833-3419	N.A	N.A	1	YES	N.A	YES	YES	36.65	32.00	35.00	34.85	28.00	N.A	2.16
	87833-3420	N.A	N.A	2											
	87833-3421	N.A	N.A	3											
	87833-5420	N.A	N.A	2	YES	N.A	YES	YES							3.18
	87833-3424	N.A	N.A	2	N.A	N.A	YES	YES							2.92
36	87833-3619	N.A	N.A	1	YES	N.A	YES	YES	38.65	34.00	37.00	36.85	30.00	N.A	2.16
	87833-3620	N.A	N.A	2											
	87833-3621	N.A	N.A	3											
38	87833-3819	N.A	N.A	1	YES	N.A	YES	YES	40.65	36.00	39.00	38.85	32.00	N.A	2.16
	87833-3820	N.A	N.A	2											
	87833-3821	N.A	N.A	3											

PLATING OPTIONS:

1 - 0.05-0.13µm/2-5µin GOLD IN CONTACT AREA AND 1.88µm/75µin MIN. MATTE TIN IN SOLDER TAIL AREA OVER 1.27µm/50µin MIN. NICKEL OVERALL.

2 - 0.38µm/15µin MIN. GOLD IN CONTACT AREA AND 1.88µm/75µin MIN. MATTE TIN IN SOLDER TAIL AREA OVER 1.27µm/50µin MIN. NICKEL OVERALL.

3 - 0.76µm/30µin MIN. GOLD IN CONTACT AREA AND 1.88µm/75µin MIN. MATTE TIN IN SOLDER TAIL AREA OVER 1.27µm/50µin MIN. NICKEL OVERALL.

THIS DRAWING CONTAINS INFORMATION THAT IS PROPRIETARY TO MOLEX ELECTRONIC TECHNOLOGIES, LLC AND SHOULD NOT BE USED WITHOUT WRITTEN PERMISSION

EC NO: 718010 2022/08/26
DRWN: DANUSA 2022/09/19
CHK'D: DANUSA 2022/09/19
APPR: MRAMAKRISHNA

GENERAL TOLERANCES (UNLESS SPECIFIED)

	MM	INCH
4 PLACES	±	±
3 PLACES	±	±
2 PLACES	± 0.2	±
1 PLACES	±	±
0 PLACES	±	±

ANGULAR TOL ± 3.0

DRAFT WHERE APPLICABLE MUST REMAIN WITHIN DIMENSIONS

REV A13

DIMENSION UNITS: MM
SCALE: NTS
DRWN BY: GMENARLY DATE: 2015/09/29
CHK'D BY: CGOH DATE: 2015/10/30
APPR BY: KHLIM DATE: 2015/11/03
DRAWING SIZE: A3
THIRD ANGLE PROJECTION

molex®

MILLIGRID, 2MM PITCH
SHROUDED HEADER R/A, THROUGH HOLE

PRODUCT CUSTOMER DRAWING

SERIES	MATERIAL NUMBER	CUSTOMER
87833	SEE TABLE	GENERAL MARKET

DOCUMENT NUMBER	DOC TYPE	DOC PART	SHEET NUMBER
SD-87833-0001	PSD	001	8 OF 9

RELEASE STATUS	P1	RELEASE DATE	2022/09/19 07:59:04

FORMAT: Met-lega-master-tb-prod-A3
REVISION: C
DATE: 2017/02/06

40 TO 50 CIRCUITS

CKT SIZE	ASSY. P/N WITHOUT KAPTON IN TUBE	ASSY. P/N WITH KAPTON IN TUBE	ASSY. P/N WITH KAPTON IN T&R	ASSY. P/N WITHOUT KAPTON IN T&R	PLATING OPTIONS	FRICTION LOCKS		DUAL SIDE SLOTS	CENTER POLARIZATION	DIMENSION						
						DUAL	CENTER			A	B	C	D	E	F	G (SOLDER TAIL)
40	87833-4019	N.A	N.A	N.A	1	YES	N.A	YES	YES	42.65	38.00	41.00	40.85	34.00	N.A	2.16
	87833-4020	N.A	N.A	N.A	2											
	87833-4021	N.A	N.A	N.A	3											
42	87833-4219	N.A	N.A	N.A	1	YES	N.A	YES	YES	44.65	40.00	43.00	42.85	36.00	N.A	2.16
	87833-4220	N.A	N.A	N.A	2											
	87833-4221	N.A	N.A	N.A	3											
	87833-4222	N.A	87833-4322	87833-4223	3	YES	N.A	YES	YES							3.50
44	87833-4419	N.A	N.A	N.A	1	44.65	40.00	43.00	42.85	2.16	42.00	45.00	44.85	38.00	N.A	2.16
	87833-4420	N.A	N.A	N.A	2											
	87833-4421	N.A	N.A	N.A	3											
	87833-4424	N.A	N.A	N.A	2	N.A	N.A	YES	YES							
	87833-4425	N.A	N.A	N.A	3											2.92
46	87833-4619	N.A	N.A	N.A	1	YES	N.A	YES	YES	48.65	44.00	47.00	46.85	40.00	N.A	2.16
	87833-4620	N.A	N.A	N.A	2											
	87833-4621	N.A	N.A	N.A	3											
48	87833-4819	N.A	N.A	N.A	1	YES	N.A	YES	YES	50.65	46.00	49.00	48.85	42.00	N.A	2.16
	87833-4820	N.A	N.A	N.A	2											
	87833-4821	N.A	N.A	N.A	3											
50	87833-5019	N.A	N.A	N.A	1	YES	N.A	YES	YES	52.65	48.00	51.00	50.85	44.00	N.A	2.16
	87833-5020	N.A	N.A	N.A	2											
	87833-5021	N.A	N.A	N.A	3											

PLATING OPTIONS:

1 - 0.05-0.13µm/2-5µin GOLD IN CONTACT AREA AND 1.88µm/75µin MIN. MATTE TIN IN SOLDER TAIL AREA OVER 1.27µm/50µin MIN. NICKEL OVERALL.

2 - 0.38µm/15µin MIN. GOLD IN CONTACT AREA AND 1.88µm/75µin MIN. MATTE TIN IN SOLDER TAIL AREA OVER 1.27µm/50µin MIN. NICKEL OVERALL.

3 - 0.76µm/30µin MIN. GOLD IN CONTACT AREA AND 1.88µm/75µin MIN. MATTE TIN IN SOLDER TAIL AREA OVER 1.27µm/50µin MIN. NICKEL OVERALL.

THIS DRAWING CONTAINS INFORMATION THAT IS PROPRIETARY TO MOLEX ELECTRONIC TECHNOLOGIES, LLC AND SHOULD NOT BE USED WITHOUT WRITTEN PERMISSION

EC NO: 718010 2022/08/26
DRWN: DANUSA 2022/09/19
CHK'D: DANUSA 2022/09/19
APPR: MRAMAKRISHNA

GENERAL TOLERANCES (UNLESS SPECIFIED)

	MM	INCH
4 PLACES	±	±
3 PLACES	±	±
2 PLACES	± 0.2	±
1 PLACES	±	±
0 PLACES	±	±

ANGULAR TOL ± 3.0

DRAFT WHERE APPLICABLE MUST REMAIN WITHIN DIMENSIONS

REV A13

DIMENSION UNITS: MM
SCALE: NTS
DRWN BY: GMENARLY DATE: 2015/09/29
CHK'D BY: CGOH DATE: 2015/10/30
APPR BY: KHLIM DATE: 2015/11/03
DRAWING SIZE: A3
THIRD ANGLE PROJECTION

molex®

MILLIGRID, 2MM PITCH
SHROUDED HEADER R/A, THROUGH HOLE

PRODUCT CUSTOMER DRAWING

SERIES	MATERIAL NUMBER	CUSTOMER
87833	SEE TABLE	GENERAL MARKET

DOCUMENT NUMBER	DOC TYPE	DOC PART	SHEET NUMBER
SD-87833-0001	PSD	001	9 OF 9

RELEASE STATUS	P1	RELEASE DATE	2022/09/19 07:59:04

FORMAT: Met-lega-master-lb-prod-A3
REVISION: C
DATE: 2017/02/06