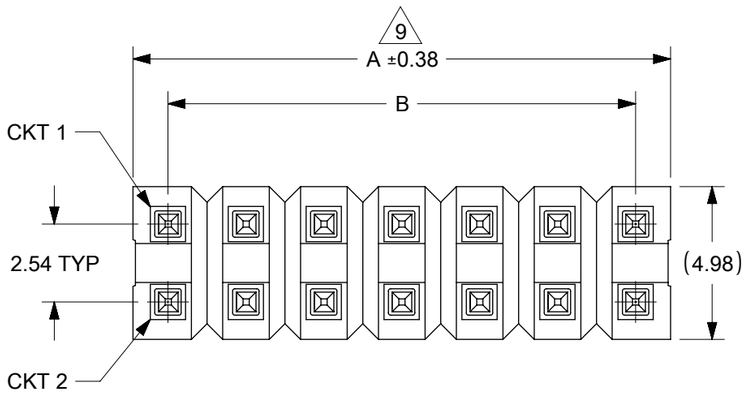

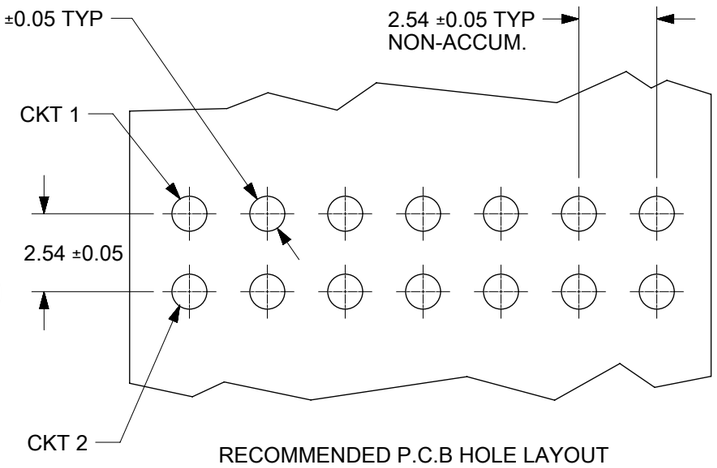

RECOMMENDED P.C.B HOLE LAYOUT

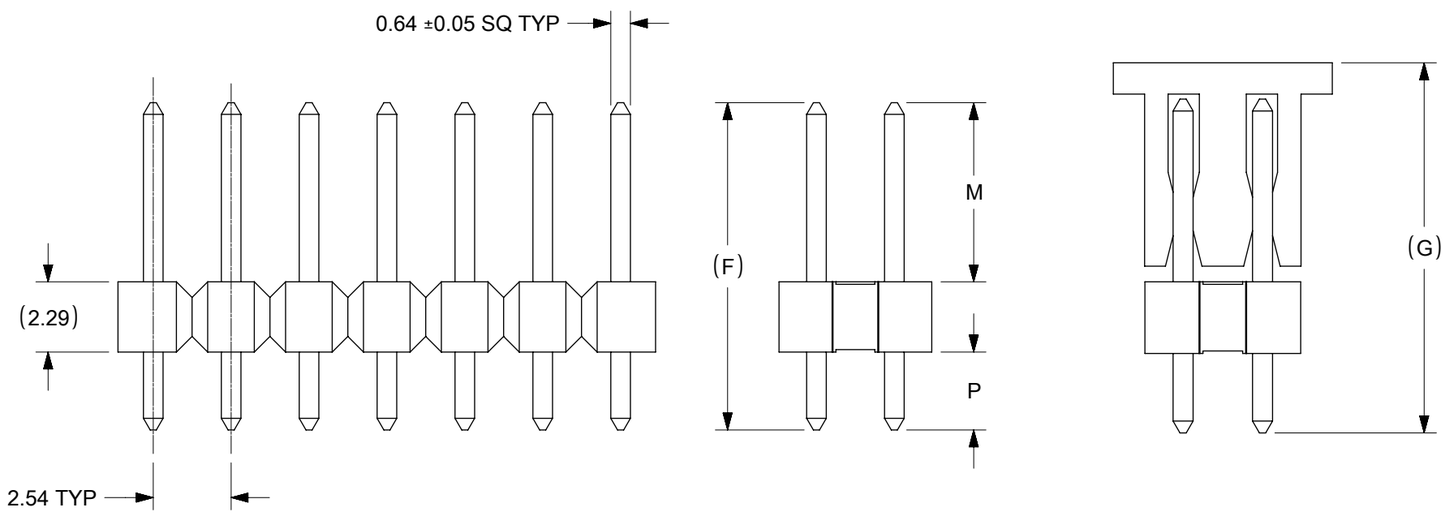

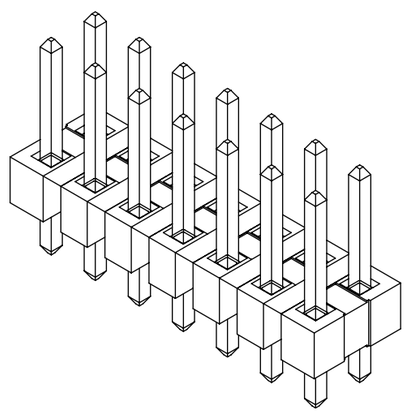

NOTES:

1. MATERIAL:
   HSG: LCP, GLASS-FILLED, UL94V-0,
   COLOR: BLACK
   PIN: 0.64MM SQ PIN, COPPER ALLOY
2. PLATING TYPE:
   (1) : 0.0254 µm GOLD FLASH OVER 1.25 µm MIN. NICKEL OVERALL.
   (2) : 0.025 µm MIN. GOLD PLATE ON CONTACT AND 1.88 µm MIN. TIN ON SOLDERTAIL OVER 1.25 µm MIN. NICKEL OVERALL.
   (3) : 0.25 µm MIN. GOLD PLATE ON CONTACT AND 1.88 µm MIN. TIN ON SOLDERTAIL OVER 1.25 µm MIN. NICKEL OVERALL.
   (4) : 0.38 µm MIN. GOLD PLATE ON CONTACT AND 1.88 µm MIN. TIN ON SOLDERTAIL OVER 1.25 µm MIN. NICKEL OVERALL.
   (5) : 0.75 µm MIN. GOLD PLATE ON CONTACT AND 1.88 µm MIN. TIN ON SOLDERTAIL OVER 1.25 µm MIN. NICKEL OVERALL
   (6) : 2.50 µm MIN. TIN IN SELECTED AREA OVER 1.25 m MIN. NICKEL OVERALL.
   (7) : 0.38 µm MIN. GOLD PLATE ON CONTACT AND 2.50 µm MIN. TIN ON SOLDERTAIL OVER 1.25 µm MIN. NICKEL OVERALL.
   (8) : 0.38 µm MIN. GOLD PLATE ON CONTACT AND 0.05 µm MIN. GOLD FLASH ON SOLDERTAIL OVER 1.25 µm MIN. NICKEL OVERALL.
   (9) : 0.05 - 0.25 µm MIN. GOLD FLASH OVER 1.25 µm MIN. NICKEL OVERALL.
3. PIN PUSHOUT FORCE: 1KG MIN IN EITHER DIRECTION
4. THE ABOVE 14 CKT IS FOR ILLUSTRATION PURPOSE ONLY.
5. FOR PACKAGING OPTION PLEASE REFER TO THE TABLE.
6. RECOMMENDED PCB THICKNESS 1.60MM.
7. PRODUCT SPECIFICATION: PS-87920-019
8. WAFER TO BE FLAT WITHIN 0.003mm/mm
9. IRREGULAR CIRCUIT CUTOFF WITHIN BREAKAWAY SECTION IS PERMISSIBLE. CUTTING OR CHIPPING OF THE MAIN BODY IS NOT ACCEPTABLE.
10. PARTS ARE NOT STACKABLE ON 2.54 CENTER
11. CAP TO BE PLACED AS CENTRAL OF PART AS POSSIBLE WITH THE TOP SURFACE FLAT FOR PICK AND PLACE.
12. PACKAGING SPECIFICATION:
    TRAY: PK-89990-489
    BULK: PK-89990-491
    TUBE: PK-87914-300

REVISION OF DRAWING MAY BE CHANGED DURING FINAL RELEASED FOR PRODUCTION.

DOCUMENT STATUS	P1	RELEASE DATE	2022/08/11 06:33:58

THIS DRAWING CONTAINS INFORMATION THAT IS PROPRIETARY TO MOLEX ELECTRONIC TECHNOLOGIES, LLC AND SHOULD NOT BE USED WITHOUT WRITTEN PERMISSION

DIMENSION UNITS	SCALE
mm	NTS

GENERAL TOLERANCES (UNLESS SPECIFIED)

	MM	INCH
4 PLACES	±	±
3 PLACES	±	±
2 PLACES	± 0.2	±
1 PLACE	±	±
0 PLACES	±	±
ANGULAR TOL	± 3.0 °	

DRAFT WHERE APPLICABLE MUST REMAIN WITHIN DIMENSIONS

CURRENT REV DESC:

EC NO: 717430
DRWN: DANUSA 2022/06/28
CHK'D: DANUSA 2022/08/11
APPR: MRAMAKRISHNA 2022/08/11

INITIAL REVISION:
DRWN: YLQIAO 2005/01/17
APPR: SCLOW 2005/01/25

THIRD ANGLE PROJECTION | DRAWING: A3-SIZE | SERIES: 87914

molex

2.54MM PITCH
DUAL ROW HEADER SINGLE WAFER, T/H

PRODUCT CUSTOMER DRAWING

DOCUMENT NUMBER	DOC TYPE	DOC PART	REVISION
SD-87914-013	PSD	000	D23

MATERIAL NUMBER	CUSTOMER	SHEET NUMBER
SEE TABLE	GENERAL MARKET	1 OF 45

FORMAT: Met-lega-master-ib-prod-A3
REVISION: E
DATE: 2020/01/14

PART NO FOR TRAY PACKAGING	PART NO. FOR TUBE WITHOUT CAP PACKAGING	PART NO. FOR TUBE WITH CAP PACKAGING	PART NO. FOR TAPE & REEL WITHOUT CAP PACKAGING	PART NO. FOR TAPE & REEL WITH CAP PACKAGING	CKT SIZE	VOID POSITION	PLATING TYPE	DIMENSION				
								A	B	F	M	P
87914-0211	-------	-------	-------	-------	2	-------	1	2.54	----	10.92	5.84	2.79
87914-0221	-------	-------	-------	-------	2	-------	1	2.54	----	12.25	7.00	2.96
87914-0231	-------	-------	-------	-------	2	-------	1	2.54	----	13.38	6.09	5.00
87914-0212	-------	-------	-------	-------	2	-------	2	2.54	----	10.92	5.84	2.79
87914-0222	-------	-------	-------	-------	2	-------	2	2.54	----	12.25	7.00	2.96
87914-0232	-------	-------	-------	-------	2	-------	2	2.54	----	13.38	6.09	5.00
87914-0213	-------	-------	-------	-------	2	-------	3	2.54	----	10.92	5.84	2.79
87914-0223	-------	-------	-------	-------	2	-------	3	2.54	----	12.25	7.00	2.96
87914-0233	-------	-------	-------	-------	2	-------	3	2.54	----	13.38	6.09	5.00
87914-0214	-------	-------	-------	-------	2	-------	4	2.54	----	10.92	5.84	2.79
87914-0224	-------	-------	-------	-------	2	-------	4	2.54	----	12.25	7.00	2.96
87914-0234	-------	-------	-------	-------	2	-------	4	2.54	----	13.38	6.09	5.00
87914-0215	-------	-------	-------	-------	2	-------	5	2.54	----	10.92	5.84	2.79
87914-0225	-------	-------	-------	-------	2	-------	5	2.54	----	12.25	7.00	2.96
87914-0235	-------	-------	-------	-------	2	-------	5	2.54	----	13.38	6.09	5.00
87914-0216	-------	-------	-------	-------	2	-------	6	2.54	----	10.92	5.84	2.79
87914-0217	-------	-------	-------	-------	2	-------	6	2.54	----	10.92	5.84	2.79
87914-0226	-------	-------	-------	-------	2	-------	6	2.54	----	12.25	7.00	2.96
87914-0227	-------	-------	-------	-------	2	-------	6	2.54	----	12.25	7.00	2.96
87914-0236	-------	-------	-------	-------	2	-------	6	2.54	----	13.38	6.09	5.00
87914-0204	--------	--------	--------	--------	2	--------	4	2.54	----	11.11	6.10	2.72
87914-0205	-------	-------	---------	--------	2	--------	5	2.54	---	11.11	6.10	2.72
87914-0206	-------	---------	---------	--------	2	---------	6	2.54	---	11.11	6.10	2.72
87914-0207	-------	---------	---------	--------	2	---------	6	2.54	---	11.11	6.10	2.72

THIS DRAWING CONTAINS INFORMATION THAT IS PROPRIETARY TO MOLEX ELECTRONIC TECHNOLOGIES, LLC AND SHOULD NOT BE USED WITHOUT WRITTEN PERMISSION

DIMENSION UNITS	SCALE
mm	NTS

GENERAL TOLERANCES (UNLESS SPECIFIED)

	MM	INCH
4 PLACES	±	±
3 PLACES	±	±
2 PLACES	± 0.2	±
1 PLACE	±	±
0 PLACES	±	±
ANGULAR TOL	± 3.0 °	

DRAFT WHERE APPLICABLE MUST REMAIN WITHIN DIMENSIONS

CURRENT REV DESC:

EC NO: 717430
DRWN: DANUSA 2022/06/28
CHK'D: DANUSA 2022/08/11
APPR: MRAMAKRISHNA 2022/08/11

INITIAL REVISION:
DRWN: YLQIAO 2005/01/17
APPR: SCLOW 2005/01/25

molex

2.54MM PITCH
DUAL ROW HEADER SINGLE WAFER, T/H

PRODUCT CUSTOMER DRAWING

DOCUMENT NUMBER	DOC TYPE	DOC PART	REVISION
SD-87914-013	PSD	000	D23

THIRD ANGLE PROJECTION	DRAWING	SERIES	MATERIAL NUMBER	CUSTOMER	SHEET NUMBER
	A3-SIZE	87914	SEE TABLE	GENERAL MARKET	2 OF 45

DOCUMENT STATUS	P1	RELEASE DATE	2022/08/11 06:33:58

FORMAT: Met-lega-master-tb-prod-A3
REVISION: E
DATE: 2020/01/14

PART NO FOR TRAY PACKAGING	PART NO. FOR TUBE WITHOUT CAP PACKAGING	PART NO. FOR TUBE WITH CAP PACKAGING	PART NO. FOR TAPE & REEL WITHOUT CAP PACKAGING	PART NO. FOR TAPE & REEL WITH CAP PACKAGING	CKT SIZE	VOID POSITION	PLATING TYPE	DIMENSION				
								A	B	F	M	P
87914-0411	-------	-------	-------	-------	4	-------	1	5.08	2.54	10.92	5.84	2.79
87914-0421	-------	-------	-------	-------	4	-------	1	5.08	2.54	12.25	7.00	2.96
87914-0431	-------	-------	-------	-------	4	-------	1	5.08	2.54	13.38	6.09	5.00
87914-0412	-------	-------	-------	-------	4	-------	2	5.08	2.54	10.92	5.84	2.79
87914-0422	-------	-------	-------	-------	4	-------	2	5.08	2.54	12.25	7.00	2.96
87914-0432	-------	-------	-------	-------	4	-------	2	5.08	2.54	13.38	6.09	5.00
87914-0413	-------	-------	-------	-------	4	-------	3	5.08	2.54	10.92	5.84	2.79
87914-0423	-------	-------	-------	-------	4	-------	3	5.08	2.54	12.25	7.00	2.96
87914-0433	-------	-------	-------	-------	4	-------	3	5.08	2.54	13.38	6.09	5.00
87914-0414	-------	-------	-------	-------	4	-------	4	5.08	2.54	10.92	5.84	2.79
87914-0424	-------	-------	-------	-------	4	-------	4	5.08	2.54	12.25	7.00	2.96
87914-0434	-------	-------	-------	-------	4	-------	4	5.08	2.54	13.38	6.09	5.00
87914-0415	-------	-------	-------	-------	4	-------	5	5.08	2.54	10.92	5.84	2.79
87914-0425	-------	-------	-------	-------	4	-------	5	5.08	2.54	12.25	7.00	2.96
87914-0435	-------	-------	-------	-------	4	-------	5	5.08	2.54	13.38	6.09	5.00
87914-0416	-------	-------	-------	-------	4	-------	6	5.08	2.54	10.92	5.84	2.79
87914-0417	-------	-------	-------	-------	4	-------	6	5.08	2.54	10.92	5.84	2.79
87914-0426	-------	-------	-------	-------	4	-------	6	5.08	2.54	12.25	7.00	2.96
87914-0427	-------	-------	-------	-------	4	-------	6	5.08	2.54	12.25	7.00	2.96
87914-0436	-------	-------	-------	-------	4	-------	6	5.08	2.54	13.38	6.09	5.00
87914-0401	------	------	------	------	4	------	4	5.08	2.54	13.21	8.13	2.79
87914-0402	-------	-------	-------	-------	4	-------	5	5.08	2.54	13.21	8.13	2.79
87914-0403	------	-------	-------	------	4	-------	6	5.08	2.54	13.21	8.13	2.79
87914-0404	-------	---------	---------	--------	4	-------	4	5.08	2.54	11.11	6.10	2.72
87914-0405	--------	---------	--------	--------	4	-------	5	5.08	2.54	11.11	6.10	2.72
87914-0406	--------	--------	---------	--------	4	-------	6	5.08	2.54	11.11	6.10	2.72
87914-0408	--------	--------	---------	--------	4	-------	6	5.08	2.54	11.11	6.10	2.72
--------	--------	--------	87914-0407	--------	4	-------	6	5.08	2.54	17.49	12.60	2.60

THIS DRAWING CONTAINS INFORMATION THAT IS PROPRIETARY TO MOLEX ELECTRONIC TECHNOLOGIES, LLC AND SHOULD NOT BE USED WITHOUT WRITTEN PERMISSION

DIMENSION UNITS	SCALE
mm	NTS

GENERAL TOLERANCES (UNLESS SPECIFIED)

	MM	INCH
4 PLACES	±	±
3 PLACES	±	±
2 PLACES	± 0.2	±
1 PLACE	±	±
0 PLACES	±	±
ANGULAR TOL	± 3.0 °	

DRAFT WHERE APPLICABLE MUST REMAIN WITHIN DIMENSIONS

CURRENT REV DESC:

EC NO: 717430
DRWN: DANUSA 2022/06/28
CHK'D: DANUSA 2022/08/11
APPR: MRAMAKRISHNA 2022/08/11

INITIAL REVISION:
DRWN: YLQIAO 2005/01/17
APPR: SCLOW 2005/01/25

molex

2.54MM PITCH
DUAL ROW HEADER SINGLE WAFER, T/H

PRODUCT CUSTOMER DRAWING

DOCUMENT NUMBER	DOC TYPE	DOC PART	REVISION
SD-87914-013	PSD	000	D23

THIRD ANGLE PROJECTION	DRAWING	SERIES	MATERIAL NUMBER	CUSTOMER	SHEET NUMBER
	A3-SIZE	87914	SEE TABLE	GENERAL MARKET	3 OF 45

DOCUMENT STATUS	P1	RELEASE DATE	2022/08/11 06:33:58

FORMAT: Met-lega-master-tb-prod-A3
REVISION: E
DATE: 2020/01/14

PART NO FOR TRAY PACKAGING	PART NO. FOR TUBE WITHOUT CAP PACKAGING	PART NO. FOR TUBE WITH CAP PACKAGING	PART NO. FOR TAPE & REEL WITHOUT CAP PACKAGING	PART NO. FOR TAPE & REEL WITH CAP PACKAGING	CKT SIZE	VOID POSITION	PLATING TYPE	DIMENSION					
								A	B	F	M	P	G
87914-0611	-------	-------	-------	-------	6	-------	1	7.62	5.08	10.92	5.84	2.79	----
87914-0621	-------	-------	-------	-------	6	-------	1	7.62	5.08	12.25	7.00	2.96	----
87914-0631	-------	-------	-------	-------	6	-------	1	7.62	5.08	13.38	6.09	5.00	----
87914-0612	-------	-------	-------	-------	6	-------	2	7.62	5.08	10.92	5.84	2.79	----
87914-0622	-------	-------	-------	-------	6	-------	2	7.62	5.08	12.25	7.00	2.96	----
87914-0632	-------	-------	-------	-------	6	-------	2	7.62	5.08	13.38	6.09	5.00	----
87914-0613	-------	-------	-------	-------	6	-------	3	7.62	5.08	10.92	5.84	2.79	----
87914-0623	-------	-------	-------	-------	6	-------	3	7.62	5.08	12.25	7.00	2.96	----
87914-0633	-------	-------	-------	-------	6	-------	3	7.62	5.08	13.38	6.09	5.00	----
87914-0614	-------	-------	-------	-------	6	-------	4	7.62	5.08	10.92	5.84	2.79	----
87914-0624	-------	-------	-------	-------	6	-------	4	7.62	5.08	12.25	7.00	2.96	----
87914-0634	-------	-------	-------	-------	6	-------	4	7.62	5.08	13.38	6.09	5.00	----
87914-0615	-------	-------	-------	87914-0652	6	-------	5	7.62	5.08	10.92	5.84	2.79	----
87914-0625	-------	-------	-------	-------	6	-------	5	7.62	5.08	12.25	7.00	2.96	----
87914-0635	-------	-------	-------	-------	6	-------	5	7.62	5.08	13.38	6.09	5.00	----
87914-0616	-------	-------	-------	-------	6	-------	6	7.62	5.08	10.92	5.84	2.79	----
87914-0617	-------	-------	-------	-------	6	-------	6	7.62	5.08	10.92	5.84	2.79	----
87914-0626	-------	-------	-------	-------	6	-------	6	7.62	5.08	12.25	7.00	2.96	----
87914-0628	-------	-------	-------	-------	6	-------	6	7.62	5.08	12.25	7.00	2.96	----
87914-0636	-------	-------	-------	-------	6	-------	6	7.62	5.08	13.38	6.09	5.00	----
87914-0601	-------	------	-----	-------	6	------	4	7.62	5.08	13.21	8.13	2.79	---
87914-0602	-------	-------	--------	-------	6	-------	5	7.62	5.08	13.21	8.13	2.79	----
87914-0603	-------	-------	-------	--------	6	-------	6	7.62	5.08	13.21	8.13	2.79	---
87914-0604	------	-------	-------	-------	6	-------	4	7.62	5.08	11.11	6.10	2.72	---
87914-0605	-------	-------	-------	-------	6	-----	5	7.62	5.08	11.11	6.10	2.72	---
87914-0606	-------	-------	-------	-------	6	-----	6	7.62	5.08	11.11	6.10	2.72	---
87914-0608	-------	-------	-------	-------	6	-----	6	7.62	5.08	11.11	6.10	2.72	---

THIS DRAWING CONTAINS INFORMATION THAT IS PROPRIETARY TO MOLEX ELECTRONIC TECHNOLOGIES, LLC AND SHOULD NOT BE USED WITHOUT WRITTEN PERMISSION

DIMENSION UNITS	SCALE
mm	NTS

GENERAL TOLERANCES (UNLESS SPECIFIED)

	MM	INCH
4 PLACES	±	±
3 PLACES	±	±
2 PLACES	± 0.2	±
1 PLACE	±	±
0 PLACES	±	±
ANGULAR TOL	± 3.0 °	

DRAFT WHERE APPLICABLE MUST REMAIN WITHIN DIMENSIONS

CURRENT REV DESC:

EC NO: 717430
DRWN: DANUSA 2022/06/28
CHK'D: DANUSA 2022/08/11
APPR: MRAMAKRISHNA 2022/08/11

INITIAL REVISION:
DRWN: YLQIAO 2005/01/17
APPR: SCLOW 2005/01/25

molex

2.54MM PITCH
DUAL ROW HEADER SINGLE WAFER, T/H

PRODUCT CUSTOMER DRAWING

DOCUMENT NUMBER	DOC TYPE	DOC PART	REVISION
SD-87914-013	PSD	000	D23

THIRD ANGLE PROJECTION	DRAWING	SERIES	MATERIAL NUMBER	CUSTOMER	SHEET NUMBER
	A3-SIZE	87914	SEE TABLE	GENERAL MARKET	4 OF 45

DOCUMENT STATUS	P1	RELEASE DATE	2022/08/11 06:33:58

FORMAT: Met-lega-master-tb-prod-A3
REVISION: E
DATE: 2020/01/14

PART NO FOR TRAY PACKAGING	PART NO. FOR TUBE WITHOUT CAP PACKAGING	PART NO. FOR TUBE WITH CAP PACKAGING	PART NO. FOR TAPE & REEL WITHOUT CAP PACKAGING	PART NO. FOR TAPE & REEL WITH CAP PACKAGING	CKT SIZE	VOID POSITION	KINK POSITION	PLATING TYPE	DIMENSION					
									A	B	F	M	P	G
87914-0009	-------	-------	-------	-------	6	-------	-------	1	7.62	5.08	18.84	13.25	3.30	---
87914-0642	-------	-------	-------	-------	6	-------	-------	2	7.62	5.08	18.84	13.25	3.30	---
87914-0643	-------	-------	-------	-------	6	-------	-------	3	7.62	5.08	18.84	13.25	3.30	---
87914-0644	-------	-------	-------	-------	6	-------	-------	4	7.62	5.08	18.84	13.25	3.30	---
87914-0645	-------	-------	-------	-------	6	-------	-------	5	7.62	5.08	18.84	13.25	3.30	---
87914-0646	-------	-------	-------	-------	6	-------	-------	6	7.62	5.08	18.84	13.25	3.30	---
87914-0647	-------	-------	-------	-------	6	CKT 1, 3 & 5	-------	6	7.62	5.08	16.49	11.20	3.00	---
-------	87914-0648	-------	-------	-------	6	-----	CKT 1 & 6	6	7.62	5.08	14.78	9.31	3.18	---
-------	-------	-------	-------	87914-0649	6	-----	-----	6	7.62	5.08	13.79	8.20	3.30	14.79
87914-0650	-------	-------	-------	-------	6	-------	-------	1	7.62	5.08	21.29	16.00	3.00	---
-------	-------	-------	-------	87914-0651	6	-------	-------	4	7.62	5.08	17.29	12.00	3.00	18.29

THIS DRAWING CONTAINS INFORMATION THAT IS PROPRIETARY TO MOLEX ELECTRONIC TECHNOLOGIES, LLC AND SHOULD NOT BE USED WITHOUT WRITTEN PERMISSION

DIMENSION UNITS	SCALE
mm	NTS

GENERAL TOLERANCES (UNLESS SPECIFIED)

	MM	INCH
4 PLACES	±	±
3 PLACES	±	±
2 PLACES	± 0.2	±
1 PLACE	±	±
0 PLACES	±	±
ANGULAR TOL	± 3.0 °	

DRAFT WHERE APPLICABLE MUST REMAIN WITHIN DIMENSIONS

CURRENT REV DESC:

EC NO: 717430
DRWN: DANUSA 2022/06/28
CHK'D: DANUSA 2022/08/11
APPR: MRAMAKRISHNA 2022/08/11

INITIAL REVISION:
DRWN: YLQIAO 2005/01/17
APPR: SCLOW 2005/01/25

THIRD ANGLE PROJECTION | DRAWING: A3-SIZE | SERIES: 87914

molex

2.54MM PITCH
DUAL ROW HEADER SINGLE WAFER, T/H

PRODUCT CUSTOMER DRAWING

DOCUMENT NUMBER	DOC TYPE	DOC PART	REVISION
SD-87914-013	PSD	000	D23

MATERIAL NUMBER	CUSTOMER	SHEET NUMBER
SEE TABLE	GENERAL MARKET	5 OF 45

DOCUMENT STATUS	P1	RELEASE DATE	2022/08/11 06:33:58

FORMAT: Met-lega-master-tb-prod-A3
REVISION: E
DATE: 2020/01/14

PART NO FOR TRAY PACKAGING	PART NO. FOR TUBE WITHOUT CAP PACKAGING	PART NO. FOR TUBE WITH CAP PACKAGING	PART NO. FOR TAPE & REEL WITHOUT CAP PACKAGING	PART NO. FOR TAPE & REEL WITH CAP PACKAGING	CKT SIZE	VOID POSITION	PLATING TYPE	DIMENSION					
								A	B	F	M	P	G
87914-0807	-------	-------	-------	-------	8	-------	6	10.16	7.62	21.75	16.51	2.95	----
87914-0818	-------	-------	-------	-------	8	-------	6	10.16	7.62	21.75	16.51	2.95	----
87914-0108	-------	-------	-------	-------	8	-------	6	10.16	7.62	16.50	11.11	3.10	----
87914-0811	-------	-------	-------	-------	8	-------	1	10.16	7.62	10.92	5.84	2.79	----
87914-0821	-------	-------	-------	-------	8	-------	1	10.16	7.62	12.25	7.00	2.96	----
87914-0831	-------	-------	-------	-------	8	-------	1	10.16	7.62	13.38	6.09	5.00	----
87914-0812	-------	-------	-------	-------	8	-------	2	10.16	7.62	10.92	5.84	2.79	----
87914-0822	-------	-------	-------	-------	8	-------	2	10.16	7.62	12.25	7.00	2.96	----
87914-0832	-------	-------	-------	-------	8	-------	2	10.16	7.62	13.38	6.09	5.00	----
87914-0813	-------	-------	-------	-------	8	-------	3	10.16	7.62	10.92	5.84	2.79	----
87914-0823	-------	-------	-------	-------	8	-------	3	10.16	7.62	12.25	7.00	2.96	----
87914-0833	-------	-------	-------	-------	8	-------	4	10.16	7.62	13.38	6.09	5.00	----
87914-0814	-------	-------	-------	-------	8	-------	4	10.16	7.62	10.92	5.84	2.79	----
87914-0824	-------	-------	-------	-------	8	-------	4	10.16	7.62	12.25	7.00	2.96	----
87914-0834	-------	-------	-------	-------	8	-------	4	10.16	7.62	13.38	6.09	5.00	----
87914-0815	-------	-------	-------	-------	8	-------	5	10.16	7.62	10.92	5.84	2.79	----
87914-0825	-------	-------	-------	-------	8	-------	5	10.16	7.62	12.25	7.00	2.96	----
87914-0835	-------	-------	-------	-------	8	-------	5	10.16	7.62	13.38	6.09	5.00	----
87914-0816	-------	-------	-------	-------	8	-------	6	10.16	7.62	10.92	5.84	2.79	----
87914-0819	-------	-------	-------	-------	8	-------	6	10.16	7.62	10.92	5.84	2.79	----
87914-0826	-------	-------	-------	-------	8	-------	6	10.16	7.62	12.25	7.00	2.96	----
87914-0828	-------	-------	-------	-------	8	-------	6	10.16	7.62	12.25	7.00	2.96	----
87914-0836	-------	-------	-------	-------	8	-------	6	10.16	7.62	13.38	6.09	5.00	----
87914-0801	--------	-------	--------	--------	8	---------	4	10.16	7.62	13.21	8.13	2.79	----
87914-0802	--------	--------	--------	--------	8	-------	5	10.16	7.62	13.21	8.13	2.79	---
87914-0803	--------	--------	-------	-------	8	-------	6	10.16	7.62	13.21	8.13	2.79	---
87914-0809	--------	--------	-------	-------	8	-------	6	10.16	7.62	13.21	8.13	2.79	---
87914-0804	-------	--------	--------	--------	8	--------	4	10.16	7.62	11.11	6.10	2.72	---
87914-0805	-------	--------	--------	--------	8	--------	5	10.16	7.62	11.11	6.10	2.72	---
87914-0806	-------	--------	--------	--------	8	--------	6	10.16	7.62	11.11	6.10	2.72	---
87914-0810	-------	--------	--------	--------	8	--------	6	10.16	7.62	11.11	6.10	2.72	---

THIS DRAWING CONTAINS INFORMATION THAT IS PROPRIETARY TO MOLEX ELECTRONIC TECHNOLOGIES, LLC AND SHOULD NOT BE USED WITHOUT WRITTEN PERMISSION

DIMENSION UNITS	SCALE
mm	NTS

GENERAL TOLERANCES (UNLESS SPECIFIED)

	MM	INCH
4 PLACES	±	±
3 PLACES	±	±
2 PLACES	± 0.2	±
1 PLACE	±	±
0 PLACES	±	±
ANGULAR TOL	± 3.0 °	

DRAFT WHERE APPLICABLE MUST REMAIN WITHIN DIMENSIONS

CURRENT REV DESC:

EC NO: 717430
DRWN: DANUSA 2022/06/28
CHK'D: DANUSA 2022/08/11
APPR: MRAMAKRISHNA 2022/08/11

INITIAL REVISION:
DRWN: YLQIAO 2005/01/17
APPR: SCLOW 2005/01/25

molex

2.54MM PITCH
DUAL ROW HEADER SINGLE WAFER, T/H

PRODUCT CUSTOMER DRAWING

DOCUMENT NUMBER	DOC TYPE	DOC PART	REVISION
SD-87914-013	PSD	000	D23

THIRD ANGLE PROJECTION	DRAWING	SERIES	MATERIAL NUMBER	CUSTOMER	SHEET NUMBER
	A3-SIZE	87914	SEE TABLE	GENERAL MARKET	6 OF 45

DOCUMENT STATUS	P1	RELEASE DATE	2022/08/11 06:33:58

FORMAT: Met-lega-master-tb-prod-A3
REVISION: E
DATE: 2020/01/14

PART NO FOR TRAY PACKAGING	PART NO. FOR TUBE WITHOUT CAP PACKAGING	PART NO. FOR TUBE WITH CAP PACKAGING	PART NO. FOR TAPE & REEL WITHOUT CAP PACKAGING	PART NO. FOR TAPE & REEL WITH CAP PACKAGING	CKT SIZE	VOID POSITION	PLATING TYPE	DIMENSION				
								A	B	F	M	P
87914-0841	-------	-------	-------	-------	8	-------	1	10.16	7.62	13.51	8.75	2.47
87914-0842	-------	-------	-------	-------	8	-------	2	10.16	7.62	13.51	8.75	2.47
87914-0843	-------	-------	-------	-------	8	-------	3	10.16	7.62	13.51	8.75	2.47
87914-0844	-------	-------	-------	-------	8	-------	4	10.16	7.62	13.51	8.75	2.47
87914-0845	-------	-------	-------	-------	8	-------	5	10.16	7.62	13.51	8.75	2.47
87914-0847	-------	-------	-------	-------	8	-------	6	10.16	7.62	26.70	20.76	3.65
-------	87914-0848	-------	-------	-------	8	-------	4	10.16	7.62	14.34	9.05	3.00
87914-0876	-------	-------	-------	-------	8	-------	6	10.16	7.62	11.94	6.75	2.90
87914-0005	-------	-------	-------	-------	8	-------	6	10.16	7.62	13.51	8.75	2.47
87914-0851	-------	-------	-------	-------	8	-------	6	10.16	7.62	25.90	19.81	3.80

THIS DRAWING CONTAINS INFORMATION THAT IS PROPRIETARY TO MOLEX ELECTRONIC TECHNOLOGIES, LLC AND SHOULD NOT BE USED WITHOUT WRITTEN PERMISSION

DIMENSION UNITS	SCALE
mm	NTS

GENERAL TOLERANCES (UNLESS SPECIFIED)

	MM	INCH
4 PLACES	±	±
3 PLACES	±	±
2 PLACES	± 0.2	±
1 PLACE	±	±
0 PLACES	±	±
ANGULAR TOL	± 3.0 °	

DRAFT WHERE APPLICABLE MUST REMAIN WITHIN DIMENSIONS

CURRENT REV DESC:

EC NO: 717430
DRWN: DANUSA 2022/06/28
CHK'D: DANUSA 2022/08/11
APPR: MRAMAKRISHNA 2022/08/11

INITIAL REVISION:
DRWN: YLQIAO 2005/01/17
APPR: SCLOW 2005/01/25

THIRD ANGLE PROJECTION | DRAWING: A3-SIZE | SERIES: 87914

molex

2.54MM PITCH
DUAL ROW HEADER SINGLE WAFER, T/H

PRODUCT CUSTOMER DRAWING

DOCUMENT NUMBER	DOC TYPE	DOC PART	REVISION
SD-87914-013	PSD	000	D23

MATERIAL NUMBER	CUSTOMER	SHEET NUMBER
SEE TABLE	GENERAL MARKET	7 OF 45

DOCUMENT STATUS	P1	RELEASE DATE	2022/08/11 06:33:58

FORMAT: Met-lega-master-tb-prod-A3
REVISION: E
DATE: 2020/01/14

PART NO FOR TRAY PACKAGING	PART NO. FOR TUBE WITHOUT CAP PACKAGING	PART NO. FOR TUBE WITH CAP PACKAGING	PART NO. FOR TAPE & REEL WITHOUT CAP PACKAGING	PART NO. FOR TAPE & REEL WITH CAP PACKAGING	PART NO. FOR BULK PACKAGING	CKT SIZE	VOID POSITION	PLATING TYPE	DIMENSION					
									A	B	F	M	P	G
87914-0001	-------	-------	-------	-------	-------	10	-------	4	12.70	10.16	12.07	5.97	3.81	----
87914-1011	-------	-------	-------	-------	-------	10	-------	1	12.70	10.16	10.92	5.84	2.79	----
87914-1021	-------	-------	-------	-------	-------	10	-------	1	12.70	10.16	12.25	7.00	2.96	----
87914-1031	-------	-------	-------	-------	-------	10	-------	1	12.70	10.16	13.38	6.09	5.00	----
87914-1012	-------	-------	-------	-------	-------	10	-------	2	12.70	10.16	10.92	5.84	2.79	----
87914-1022	-------	-------	-------	-------	-------	10	-------	2	12.70	10.16	12.25	7.00	2.96	----
87914-1032	-------	-------	-------	-------	-------	10	-------	2	12.70	10.16	13.38	6.09	5.00	----
87914-1013	-------	-------	-------	-------	-------	10	-------	3	12.70	10.16	10.92	5.84	2.79	----
87914-1023	-------	-------	-------	-------	-------	10	-------	3	12.70	10.16	12.25	7.00	2.96	----
87914-1033	-------	-------	-------	-------	-------	10	-------	3	12.70	10.16	13.38	6.09	5.00	----
87914-1014	-------	-------	-------	-------	-------	10	-------	4	12.70	10.16	10.92	5.84	2.79	----
87914-1024	-------	-------	-------	-------	-------	10	-------	4	12.70	10.16	12.25	7.00	2.96	----
87914-1034	-------	-------	-------	-------	-------	10	-------	4	12.70	10.16	13.38	6.09	5.00	----
87914-1015	-------	-------	-------	-------	-------	10	-------	5	12.70	10.16	10.92	5.84	2.79	----
87914-1025	-------	-------	-------	-------	-------	10	-------	5	12.70	10.16	12.25	7.00	2.96	----
87914-1035	-------	-------	-------	-------	-------	10	-------	5	12.70	10.16	13.38	6.09	5.00	----
87914-1016	-------	-------	-------	-------	-------	10	-------	6	12.70	10.16	10.92	5.84	2.79	----
87914-1018	-------	-------	-------	-------	-------	10	-------	6	12.70	10.16	10.92	5.84	2.79	----
87914-1026	-------	-------	-------	-------	-------	10	-------	6	12.70	10.16	12.25	7.00	2.96	----
87914-1027	-------	-------	-------	-------	-------	10	-------	6	12.70	10.16	12.25	7.00	2.96	----
87914-1036	-------	-------	-------	-------	-------	10	-------	6	12.70	10.16	13.38	6.09	5.00	----
-------	-------	-------	-------	-------	87914-1037	10	9	4	12.70	10.16	10.92	5.84	2.79	----
87914-1001	--------	--------	--------	--------	--------	10	------	------	12.70	10.16	13.21	8.13	2.79	---
87914-1002	--------	--------	--------	--------	--------	10	------	------	12.70	10.16	13.21	8.13	2.79	---
87914-1003	--------	--------	--------	--------	--------	10	------	------	12.70	10.16	13.21	8.13	2.79	---
87914-1007	--------	--------	--------	--------	--------	10	------	------	12.70	10.16	13.21	8.13	2.79	---
87914-1004	--------	--------	--------	--------	--------	10	------	------	12.70	10.16	13.21	6.10	2.72	---
87914-1005	--------	--------	--------	--------	--------	10	------	------	12.70	10.16	13.21	6.10	2.72	---
87914-1006	------	--------	--------	--------	--------	10	------	------	12.70	10.16	13.21	6.10	2.72	---
87914-1008	------	--------	--------	--------	--------	10	------	------	12.70	10.16	13.21	6.10	2.72	---

THIS DRAWING CONTAINS INFORMATION THAT IS PROPRIETARY TO MOLEX ELECTRONIC TECHNOLOGIES, LLC AND SHOULD NOT BE USED WITHOUT WRITTEN PERMISSION

DIMENSION UNITS	SCALE
mm	NTS

GENERAL TOLERANCES (UNLESS SPECIFIED)

	MM	INCH
4 PLACES	±	±
3 PLACES	±	±
2 PLACES	± 0.2	±
1 PLACE	±	±
0 PLACES	±	±
ANGULAR TOL	± 3.0 °	

DRAFT WHERE APPLICABLE MUST REMAIN WITHIN DIMENSIONS

CURRENT REV DESC:

EC NO: 717430
DRWN: DANUSA 2022/06/28
CHK'D: DANUSA 2022/08/11
APPR: MRAMAKRISHNA 2022/08/11

INITIAL REVISION:
DRWN: YLQIAO 2005/01/17
APPR: SCLOW 2005/01/25

molex

2.54MM PITCH
DUAL ROW HEADER SINGLE WAFER, T/H

PRODUCT CUSTOMER DRAWING

DOCUMENT NUMBER	DOC TYPE	DOC PART	REVISION
SD-87914-013	PSD	000	D23

THIRD ANGLE PROJECTION	DRAWING	SERIES	MATERIAL NUMBER	CUSTOMER	SHEET NUMBER
	A3-SIZE	87914	SEE TABLE	GENERAL MARKET	8 OF 45

DOCUMENT STATUS	P1	RELEASE DATE	2022/08/11 06:33:58

FORMAT: Met-lega-master-tb-prod-A3
REVISION: E
DATE: 2020/01/14

PART NO FOR TRAY PACKAGING	PART NO. FOR TUBE WITHOUT CAP PACKAGING	PART NO. FOR TUBE WITH CAP PACKAGING	PART NO. FOR TAPE & REEL WITHOUT CAP PACKAGING	PART NO. FOR TAPE & REEL WITH CAP PACKAGING	CKT SIZE	VOID POSITION	PLATING TYPE	DIMENSION				
								A	B	F	M	P
87914-1211	-------	-------	-------	-------	12	-------	1	15.24	12.70	10.92	5.84	2.79
-------	87914-1291	-------	-------	-------	12	-------	9	15.24	12.70	10.92	5.84	2.79
87914-1221	-------	-------	-------	-------	12	-------	1	15.24	12.70	12.25	7.00	2.96
87914-1231	-------	-------	-------	-------	12	-------	1	15.24	12.70	13.38	6.09	5.00
87914-1212	-------	-------	-------	-------	12	-------	2	15.24	12.70	10.92	5.84	2.79
87914-1222	-------	-------	-------	-------	12	-------	2	15.24	12.70	12.25	7.00	2.96
87914-1232	-------	-------	-------	-------	12	-------	2	15.24	12.70	13.38	6.09	5.00
87914-1213	-------	-------	-------	-------	12	-------	3	15.24	12.70	10.92	5.84	2.79
87914-1223	-------	-------	-------	-------	12	-------	3	15.24	12.70	12.25	7.00	2.96
87914-1233	-------	-------	-------	-------	12	-------	3	15.24	12.70	13.38	6.09	5.00
87914-1214	-------	-------	-------	-------	12	-------	4	15.24	12.70	10.92	5.84	2.79
87914-1224	-------	-------	-------	-------	12	-------	4	15.24	12.70	12.25	7.00	2.96
87914-1234	-------	-------	-------	-------	12	-------	4	15.24	12.70	13.38	6.09	5.00
87914-1215	-------	-------	-------	-------	12	-------	5	15.24	12.70	10.92	5.84	2.79
87914-1225	-------	-------	-------	-------	12	-------	5	15.24	12.70	12.25	7.00	2.96
87914-1235	-------	-------	-------	-------	12	-------	5	15.24	12.70	13.38	6.09	5.00
87914-1216	-------	-------	-------	-------	12	-------	6	15.24	12.70	10.92	5.84	2.79
87914-1218	-------	-------	-------	-------	12	-------	6	15.24	12.70	10.92	5.84	2.79
87914-1226	-------	-------	-------	-------	12	-------	6	15.24	12.70	12.25	7.00	2.96
87914-1228	-------	-------	-------	-------	12	-------	6	15.24	12.70	12.25	7.00	2.96
87914-1236	-------	-------	-------	-------	12	-------	6	15.24	12.70	13.38	6.09	5.00
87914-1246	-------	-------	-------	-------	12	-------	5	15.24	12.70	29.26	23.32	3.65
87914-1247	-------	-------	-------	-------	12	-------	5	15.24	12.70	29.26	23.32	3.65

THIS DRAWING CONTAINS INFORMATION THAT IS PROPRIETARY TO MOLEX ELECTRONIC TECHNOLOGIES, LLC AND SHOULD NOT BE USED WITHOUT WRITTEN PERMISSION

DIMENSION UNITS	SCALE
mm	NTS

GENERAL TOLERANCES (UNLESS SPECIFIED)

	MM	INCH
4 PLACES	±	±
3 PLACES	±	±
2 PLACES	± 0.2	±
1 PLACE	±	±
0 PLACES	±	±
ANGULAR TOL	± 3.0 °	

DRAFT WHERE APPLICABLE MUST REMAIN WITHIN DIMENSIONS

CURRENT REV DESC:

EC NO: 717430
DRWN: DANUSA 2022/06/28
CHK'D: DANUSA 2022/08/11
APPR: MRAMAKRISHNA 2022/08/11

INITIAL REVISION:
DRWN: YLQIAO 2005/01/17
APPR: SCLOW 2005/01/25

THIRD ANGLE PROJECTION | DRAWING: A3-SIZE | SERIES: 87914

molex

2.54MM PITCH
DUAL ROW HEADER SINGLE WAFER, T/H

PRODUCT CUSTOMER DRAWING

DOCUMENT NUMBER	DOC TYPE	DOC PART	REVISION
SD-87914-013	PSD	000	D23

MATERIAL NUMBER	CUSTOMER	SHEET NUMBER
SEE TABLE	GENERAL MARKET	9 OF 45

DOCUMENT STATUS	P1	RELEASE DATE	2022/08/11 06:33:58

FORMAT: Met-lega-master-lb-prod-A3
REVISION: E
DATE: 2020/01/14

PART NO FOR TRAY PACKAGING	PART NO. FOR TUBE WITHOUT CAP PACKAGING	PART NO. FOR TUBE WITH CAP PACKAGING	PART NO. FOR TAPE & REEL WITHOUT CAP PACKAGING	PART NO. FOR TAPE & REEL WITH CAP PACKAGING	CKT SIZE	VOID POSITION	PLATING TYPE	DIMENSION				
								A	B	F	M	P
87914-1251	-------	-------	-------	-------	12	-------	1	15.24	12.70	18.40	13.08	3.03
87914-1252	-------	-------	-------	-------	12	-------	2	15.24	12.70	18.40	13.08	3.03
87914-1253	-------	-------	-------	-------	12	-------	3	15.24	12.70	18.40	13.08	3.03
87914-1254	-------	-------	-------	-------	12	-------	4	15.24	12.70	18.40	13.08	3.03
87914-1255	-------	-------	-------	-------	12	-------	5	15.24	12.70	18.40	13.08	3.03
87914-1256	-------	-------	-------	-------	12	-------	6	15.24	12.70	18.40	13.08	3.03
87914-1241	-------	-------	-------	-------	12	-------	1	15.24	12.70	12.50	6.95	3.26
87914-1242	-------	-------	-------	-------	12	-------	2	15.24	12.70	12.50	6.95	3.26
87914-1243	-------	-------	-------	-------	12	-------	3	15.24	12.70	12.50	6.95	3.26
87914-1244	-------	-------	-------	-------	12	-------	4	15.24	12.70	12.50	6.95	3.26
87914-1245	-------	-------	-------	-------	12	-------	5	15.24	12.70	12.50	6.95	3.26
87914-1201	-------	-------	-------	-------	12	-------	4	15.24	12.70	13.21	8.13	2.79
87914-1202	-------	-------	-------	-------	12	-------	5	15.24	12.70	13.21	8.13	2.79
87914-1203	-------	-------	-------	-------	12	-------	6	15.24	12.70	13.21	8.13	2.79
87914-1204	-------	-------	-------	-------	12	-------	4	15.24	12.70	11.11	6.10	2.72
87914-1205	-------	-------	-------	-------	12	-------	5	15.24	12.70	11.11	6.10	2.72
87914-1206	-------	-------	-------	-------	12	-------	6	15.24	12.70	11.11	6.10	2.72
87914-1207	-------	-------	-------	-------	12	-------	6	15.24	12.70	11.11	6.10	2.72

THIS DRAWING CONTAINS INFORMATION THAT IS PROPRIETARY TO MOLEX ELECTRONIC TECHNOLOGIES, LLC AND SHOULD NOT BE USED WITHOUT WRITTEN PERMISSION

DIMENSION UNITS	SCALE
mm	NTS

GENERAL TOLERANCES (UNLESS SPECIFIED)

	MM	INCH
4 PLACES	±	±
3 PLACES	±	±
2 PLACES	± 0.2	±
1 PLACE	±	±
0 PLACES	±	±
ANGULAR TOL	± 3.0 °	

DRAFT WHERE APPLICABLE MUST REMAIN WITHIN DIMENSIONS

CURRENT REV DESC:

EC NO: 717430
DRWN: DANUSA 2022/06/28
CHK'D: DANUSA 2022/08/11
APPR: MRAMAKRISHNA 2022/08/11

INITIAL REVISION:
DRWN: YLQIAO 2005/01/17
APPR: SCLOW 2005/01/25

THIRD ANGLE PROJECTION | DRAWING: A3-SIZE | SERIES: 87914

molex

2.54MM PITCH
DUAL ROW HEADER SINGLE WAFER, T/H

PRODUCT CUSTOMER DRAWING

DOCUMENT NUMBER	DOC TYPE	DOC PART	REVISION
SD-87914-013	PSD	000	D23

MATERIAL NUMBER	CUSTOMER	SHEET NUMBER
SEE TABLE	GENERAL MARKET	10 OF 45

DOCUMENT STATUS	P1	RELEASE DATE	2022/08/11 06:33:58

FORMAT: Met-lega-master-tb-prod-A3
REVISION: E
DATE: 2020/01/14

PART NO FOR TRAY PACKAGING	PART NO. FOR TUBE WITHOUT CAP PACKAGING	PART NO. FOR TUBE WITH CAP PACKAGING	PART NO. FOR TAPE & REEL WITHOUT CAP PACKAGING	PART NO. FOR TAPE & REEL WITH CAP PACKAGING	CKT SIZE	VOID POSITION	PLATING TYPE	DIMENSION				
								A	B	F	M	P
87914-1411	-------	-------	-------	-------	14	-------	1	17.78	15.24	10.92	5.84	2.79
87914-1421	-------	-------	-------	-------	14	-------	1	17.78	15.24	12.25	7.00	2.96
87914-1431	-------	-------	-------	-------	14	-------	1	17.78	15.24	13.38	6.09	5.00
87914-1412	-------	-------	-------	-------	14	-------	2	17.78	15.24	10.92	5.84	2.79
87914-1422	-------	-------	-------	-------	14	-------	2	17.78	15.24	12.25	7.00	2.96
87914-1432	-------	-------	-------	-------	14	-------	2	17.78	15.24	13.38	6.09	5.00
87914-1413	-------	-------	-------	-------	14	-------	3	17.78	15.24	10.92	5.84	2.79
87914-1423	-------	-------	-------	-------	14	-------	3	17.78	15.24	12.25	7.00	2.96
87914-1433	-------	-------	-------	-------	14	-------	3	17.78	15.24	13.38	6.09	5.00
87914-1414	-------	-------	-------	-------	14	-------	4	17.78	15.24	10.92	5.84	2.79
87914-1424	-------	-------	-------	-------	14	-------	4	17.78	15.24	12.25	7.00	2.96
87914-1434	-------	-------	-------	-------	14	-------	4	17.78	15.24	13.38	6.09	5.00
87914-1415	-------	-------	-------	-------	14	-------	5	17.78	15.24	10.92	5.84	2.79
87914-1425	-------	-------	-------	-------	14	-------	5	17.78	15.24	12.25	7.00	2.96
87914-1435	-------	-------	-------	-------	14	-------	5	17.78	15.24	13.38	6.09	5.00
87914-1416	-------	-------	-------	-------	14	-------	6	17.78	15.24	10.92	5.84	2.79
87914-1417	-------	-------	-------	-------	14	-------	6	17.78	15.24	10.92	5.84	2.79
87914-1426	-------	-------	-------	-------	14	-------	6	17.78	15.24	12.25	7.00	2.96
87914-1427	-------	-------	-------	-------	14	-------	6	17.78	15.24	12.25	7.00	2.96
87914-1436	-------	-------	-------	-------	14	-------	6	17.78	15.24	13.38	6.09	5.00
87914-1401	-------	-------	-------	-------	14	-------	4	17.78	15.24	13.21	8.13	2.79
87914-1402	-------	-------	-------	-------	14	-------	5	17.78	15.24	13.21	8.13	2.79
87914-1403	-------	-------	-------	-------	14	-------	6	17.78	15.24	13.21	8.13	2.79
87914-1404	-------	-------	-------	-------	14	-------	4	17.78	15.24	11.11	6.10	2.72
87914-1405	-------	-------	-------	-------	14	-------	5	17.78	15.24	11.11	6.10	2.72
87914-1406	-------	-------	-------	-------	14	-------	6	17.78	15.24	11.11	6.10	2.72
87914-1407	-------	-------	-------	-------	14	-------	6	17.78	15.24	11.11	6.10	2.72
87914-0007	-------	-------	-------	-------	14	-------	5	17.78	15.24	13.42	8.08	3.05

THIS DRAWING CONTAINS INFORMATION THAT IS PROPRIETARY TO MOLEX ELECTRONIC TECHNOLOGIES, LLC AND SHOULD NOT BE USED WITHOUT WRITTEN PERMISSION

DIMENSION UNITS	SCALE
mm	NTS

GENERAL TOLERANCES (UNLESS SPECIFIED)

	MM	INCH
4 PLACES	±	±
3 PLACES	±	±
2 PLACES	± 0.2	±
1 PLACE	±	±
0 PLACES	±	±
ANGULAR TOL	± 3.0 °	

DRAFT WHERE APPLICABLE MUST REMAIN WITHIN DIMENSIONS

CURRENT REV DESC:

EC NO: 717430
DRWN: DANUSA 2022/06/28
CHK'D: DANUSA 2022/08/11
APPR: MRAMAKRISHNA 2022/08/11

INITIAL REVISION:
DRWN: YLQIAO 2005/01/17
APPR: SCLOW 2005/01/25

molex

2.54MM PITCH
DUAL ROW HEADER SINGLE WAFER, T/H

PRODUCT CUSTOMER DRAWING

DOCUMENT NUMBER	DOC TYPE	DOC PART	REVISION
SD-87914-013	PSD	000	D23

THIRD ANGLE PROJECTION	DRAWING	SERIES	MATERIAL NUMBER	CUSTOMER	SHEET NUMBER
	A3-SIZE	87914	SEE TABLE	GENERAL MARKET	11 OF 45

DOCUMENT STATUS	P1	RELEASE DATE	2022/08/11 06:33:58

FORMAT: Met-lega-master-tb-prod-A3
REVISION: E
DATE: 2020/01/14

PART NO FOR TRAY PACKAGING	PART NO. FOR TUBE WITHOUT CAP PACKAGING	PART NO. FOR TUBE WITH CAP PACKAGING	PART NO. FOR TAPE & REEL WITHOUT CAP PACKAGING	PART NO. FOR TAPE & REEL WITH CAP PACKAGING	CKT SIZE	VOID POSITION	KINK POSITION	PLATING TYPE	DIMENSION					
									A	B	F	M	P	G
87914-1441	-------	-------	-------	-------	14	-------	-------	1	17.78	15.24	13.42	8.08	3.05	---
87914-1442	-------	-------	-------	-------	14	-------	-------	2	17.78	15.24	13.42	8.08	3.05	---
87914-1443	-------	-------	-------	-------	14	-------	-------	3	17.78	15.24	13.42	8.08	3.05	---
87914-1444	-------	-------	-------	-------	14	-------	-------	4	17.78	15.24	13.42	8.08	3.05	---
87914-1445	-------	-------	-------	-------	14	-------	-------	5	17.78	15.24	13.42	8.08	3.05	---
-------	87914-1446	-------	-------	-------	14	-------	CKT 1, 2, 13 & 14	6	17.78	15.24	14.58	9.11	3.18	---
-------	-------	-------	-------	87914-1447	14	-------	-------	6	17.78	15.24	13.79	8.20	3.30	14.79

THIS DRAWING CONTAINS INFORMATION THAT IS PROPRIETARY TO MOLEX ELECTRONIC TECHNOLOGIES, LLC AND SHOULD NOT BE USED WITHOUT WRITTEN PERMISSION

DIMENSION UNITS	SCALE
mm	NTS

GENERAL TOLERANCES (UNLESS SPECIFIED)

	MM	INCH
4 PLACES	±	±
3 PLACES	±	±
2 PLACES	± 0.2	±
1 PLACE	±	±
0 PLACES	±	±
ANGULAR TOL	± 3.0 °	

DRAFT WHERE APPLICABLE MUST REMAIN WITHIN DIMENSIONS

CURRENT REV DESC:

EC NO: 717430
DRWN: DANUSA 2022/06/28
CHK'D: DANUSA 2022/08/11
APPR: MRAMAKRISHNA 2022/08/11

INITIAL REVISION:
DRWN: YLQIAO 2005/01/17
APPR: SCLOW 2005/01/25

THIRD ANGLE PROJECTION | DRAWING: A3-SIZE | SERIES: 87914

molex

2.54MM PITCH
DUAL ROW HEADER SINGLE WAFER, T/H

PRODUCT CUSTOMER DRAWING

DOCUMENT NUMBER	DOC TYPE	DOC PART	REVISION
SD-87914-013	PSD	000	D23

MATERIAL NUMBER	CUSTOMER	SHEET NUMBER
SEE TABLE	GENERAL MARKET	12 OF 45

DOCUMENT STATUS	P1	RELEASE DATE	2022/08/11 06:33:58

FORMAT: Met-lega-master-tb-prod-A3
REVISION: E
DATE: 2020/01/14

PART NO FOR TRAY PACKAGING	PART NO. FOR TUBE WITHOUT CAP PACKAGING	PART NO. FOR TUBE WITH CAP PACKAGING	PART NO. FOR TAPE & REEL WITHOUT CAP PACKAGING	PART NO. FOR TAPE & REEL WITH CAP PACKAGING	CKT SIZE	VOID POSITION	PLATING TYPE	DIMENSION				
								A	B	F	M	P
87914-1611	-------	-------	-------	-------	16	-------	1	20.32	17.78	10.92	5.84	2.79
87914-1621	-------	-------	-------	-------	16	-------	1	20.32	17.78	12.25	7.00	2.96
87914-1631	-------	-------	-------	-------	16	-------	1	20.32	17.78	13.38	6.09	5.00
87914-1612	-------	-------	-------	-------	16	-------	2	20.32	17.78	10.92	5.84	2.79
87914-1622	-------	-------	-------	-------	16	-------	2	20.32	17.78	12.25	7.00	2.96
87914-1632	-------	-------	-------	-------	16	-------	2	20.32	17.78	13.38	6.09	5.00
87914-1613	-------	-------	-------	-------	16	-------	3	20.32	17.78	10.92	5.84	2.79
87914-1623	-------	-------	-------	-------	16	-------	3	20.32	17.78	12.25	7.00	2.96
87914-1633	-------	-------	-------	-------	16	-------	3	20.32	17.78	13.38	6.09	5.00
87914-1614	-------	-------	-------	-------	16	-------	4	20.32	17.78	10.92	5.84	2.79
87914-1624	-------	-------	-------	-------	16	-------	4	20.32	17.78	12.25	7.00	2.96
87914-1634	-------	-------	-------	-------	16	-------	4	20.32	17.78	13.38	6.09	5.00
87914-1615	-------	-------	-------	-------	16	-------	5	20.32	17.78	10.92	5.84	2.79
87914-1625	-------	-------	-------	-------	16	-------	5	20.32	17.78	12.25	7.00	2.96
87914-1635	-------	-------	-------	-------	16	-------	5	20.32	17.78	13.38	6.09	5.00
87914-1616	-------	-------	-------	-------	16	-------	6	20.32	17.78	10.92	5.84	2.79
87914-1617	-------	-------	-------	-------	16	-------	6	20.32	17.78	10.92	5.84	2.79
87914-1626	-------	-------	-------	-------	16	-------	6	20.32	17.78	12.25	7.00	2.96
87914-1627	-------	-------	-------	-------	16	-------	6	20.32	17.78	12.25	7.00	2.96
87914-1636	-------	-------	-------	-------	16	-------	6	20.32	17.78	13.38	6.09	5.00
87914-1601	-------	-------	-------	-------	16	-------	4	20.32	17.78	13.21	8.13	2.79
87914-1602	-------	-------	-------	-------	16	-------	5	20.32	17.78	13.21	8.13	2.79
87914-1603	-------	-------	-------	-------	16	-------	6	20.32	17.78	13.21	8.13	2.79
87914-1604	-------	-------	-------	-------	16	-------	4	20.32	17.78	11.11	6.10	2.72
87914-1605	-------	-------	-------	-------	16	-------	5	20.32	17.78	11.11	6.10	2.72
87914-1606	-------	-------	-------	-------	16	-------	6	20.32	17.78	11.11	6.10	2.72
87914-1608	-------	-------	-------	-------	16	-------	6	20.32	17.78	11.11	6.10	2.72
87914-1650	-------	-------	-------	-------	16	-------	5	20.32	17.78	12.49	7.40	2.80
87914-1600	-------	-------	-------	-------	16	-------	5	20.32	17.78	9.49	4.50.	2.70
87914-1607	-------	-------	-------	-------	16	-------	5	20.32	17.78	9.49	4.50.	2.70
87914-1637	-------	-------	-------	-------	16	-------	5	20.32	17.78	15.79	10.45	3.05
87914-1652	-------	-------	-------	-------	16	-------	5	20.32	17.78	25.90	19.81	3.80

THIS DRAWING CONTAINS INFORMATION THAT IS PROPRIETARY TO MOLEX ELECTRONIC TECHNOLOGIES, LLC AND SHOULD NOT BE USED WITHOUT WRITTEN PERMISSION

DIMENSION UNITS	SCALE
mm	NTS

GENERAL TOLERANCES (UNLESS SPECIFIED)

	MM	INCH
4 PLACES	±	±
3 PLACES	±	±
2 PLACES	± 0.2	±
1 PLACE	±	±
0 PLACES	±	±
ANGULAR TOL	± 3.0 °	

DRAFT WHERE APPLICABLE MUST REMAIN WITHIN DIMENSIONS

CURRENT REV DESC:

EC NO: 717430
DRWN: DANUSA 2022/06/28
CHK'D: DANUSA 2022/08/11
APPR: MRAMAKRISHNA 2022/08/11

INITIAL REVISION:
DRWN: YLQIAO 2005/01/17
APPR: SCLOW 2005/01/25

THIRD ANGLE PROJECTION | DRAWING: A3-SIZE | SERIES: 87914

molex

2.54MM PITCH
DUAL ROW HEADER SINGLE WAFER, T/H

PRODUCT CUSTOMER DRAWING

DOCUMENT NUMBER	DOC TYPE	DOC PART	REVISION
SD-87914-013	PSD	000	D23

MATERIAL NUMBER	CUSTOMER	SHEET NUMBER
SEE TABLE	GENERAL MARKET	13 OF 45

DOCUMENT STATUS	P1	RELEASE DATE	2022/08/11 06:33:58

FORMAT: Met-lega-master-lb-prod-A3
REVISION: E
DATE: 2020/01/14

PART NO FOR TRAY PACKAGING	PART NO. FOR TUBE WITHOUT CAP PACKAGING	PART NO. FOR TUBE WITH CAP PACKAGING	PART NO. FOR TAPE & REEL WITHOUT CAP PACKAGING	PART NO. FOR TAPE & REEL WITH CAP PACKAGING	CKT SIZE	VOID POSITION	PLATING TYPE	DIMENSION					
								A	B	F	M	P	G
87914-1811	-------	-------	-------	-------	18	-------	1	22.86	20.32	10.92	5.84	2.79	----
87914-1821	-------	-------	-------	-------	18	-------	1	22.86	20.32	12.25	7.00	2.96	----
87914-1831	-------	-------	-------	-------	18	-------	1	22.86	20.32	13.38	6.09	5.00	----
87914-1812	-------	-------	-------	-------	18	-------	2	22.86	20.32	10.92	5.84	2.79	----
87914-1822	-------	-------	-------	-------	18	-------	2	22.86	20.32	12.25	7.00	2.96	----
87914-1832	-------	-------	-------	-------	18	-------	2	22.86	20.32	13.38	6.09	5.00	----
87914-1813	-------	-------	-------	-------	18	-------	3	22.86	20.32	10.92	5.84	2.79	----
87914-1823	-------	-------	-------	-------	18	-------	3	22.86	20.32	12.25	7.00	2.96	----
87914-1833	-------	-------	-------	-------	18	-------	3	22.86	20.32	13.38	6.09	5.00	----
87914-1814	-------	-------	-------	-------	18	-------	4	22.86	20.32	10.92	5.84	2.79	----
87914-1824	-------	-------	-------	-------	18	-------	4	22.86	20.32	12.25	7.00	2.96	----
87914-1834	-------	-------	-------	-------	18	-------	4	22.86	20.32	13.38	6.09	5.00	----
87914-1815	-------	-------	-------	-------	18	-------	5	22.86	20.32	10.92	5.84	2.79	----
87914-1825	-------	-------	-------	-------	18	-------	5	22.86	20.32	12.25	7.00	2.96	----
87914-1835	-------	-------	-------	-------	18	-------	5	22.86	20.32	13.38	6.09	5.00	----
87914-1816	-------	-------	-------	-------	18	-------	6	22.86	20.32	10.92	5.84	2.79	----
87914-1817	-------	-------	-------	-------	18	-------	6	22.86	20.32	10.92	5.84	2.79	----
87914-1826	-------	-------	-------	-------	18	-------	6	22.86	20.32	12.25	7.00	2.96	----
87914-1827	-------	-------	-------	-------	18	-------	6	22.86	20.32	12.25	7.00	2.96	----
87914-1836	-------	-------	-------	-------	18	-------	6	22.86	20.32	13.38	6.09	5.00	----
87914-1801	--------	-------	-------	-------	18	-------	4	22.86	20.32	13.21	8.13	2.79	---
87914-1802	-------	-------	-------	-------	18	-------	5	22.86	20.32	13.21	8.13	2.79	---
87914-1803	-------	-------	-------	-------	18	-------	6	22.86	20.32	13.21	8.13	2.79	---
87914-1804	-------	-------	-------	-------	18	-------	4	22.86	20.32	11.11	6.10	2.72	---
87914-1805	-------	-------	-------	-------	18	-------	5	22.86	20.32	11.11	6.10	2.72	---
87914-1806	-------	-------	-------	-------	18	-------	6	22.86	20.32	11.11	6.10	2.72	---
87914-1809	-------	-------	-------	-------	18	-------	6	22.86	20.32	11.11	6.10	2.72	---
-------	-------	87914-1807	-------	-------	18	-------	5	22.86	20.32	17.02	11.05	3.68	18.02

THIS DRAWING CONTAINS INFORMATION THAT IS PROPRIETARY TO MOLEX ELECTRONIC TECHNOLOGIES, LLC AND SHOULD NOT BE USED WITHOUT WRITTEN PERMISSION

DIMENSION UNITS	SCALE
mm	NTS

GENERAL TOLERANCES (UNLESS SPECIFIED)

	MM	INCH
4 PLACES	±	±
3 PLACES	±	±
2 PLACES	± 0.2	±
1 PLACE	±	±
0 PLACES	±	±
ANGULAR TOL	± 3.0 °	

DRAFT WHERE APPLICABLE MUST REMAIN WITHIN DIMENSIONS

CURRENT REV DESC:

EC NO: 717430
DRWN: DANUSA 2022/06/28
CHK'D: DANUSA 2022/08/11
APPR: MRAMAKRISHNA 2022/08/11

INITIAL REVISION:
DRWN: YLQIAO 2005/01/17
APPR: SCLOW 2005/01/25

molex

2.54MM PITCH
DUAL ROW HEADER SINGLE WAFER, T/H

PRODUCT CUSTOMER DRAWING

DOCUMENT NUMBER	DOC TYPE	DOC PART	REVISION
SD-87914-013	PSD	000	D23

THIRD ANGLE PROJECTION	DRAWING	SERIES	MATERIAL NUMBER	CUSTOMER	SHEET NUMBER
	A3-SIZE	87914	SEE TABLE	GENERAL MARKET	14 OF 45

DOCUMENT STATUS	P1	RELEASE DATE	2022/08/11 06:33:58

FORMAT: Met-lega-master-tb-prod-A3
REVISION: E
DATE: 2020/01/14

PART NO FOR TRAY PACKAGING	PART NO. FOR TUBE WITHOUT CAP PACKAGING	PART NO. FOR TUBE WITH CAP PACKAGING	PART NO. FOR TAPE & REEL WITHOUT CAP PACKAGING	PART NO. FOR TAPE & REEL WITH CAP PACKAGING	CKT SIZE	VOID POSITION	PLATING TYPE	DIMENSION				
								A	B	F	M	P
87914-2011	-------	-------	-------	-------	20	-------	1	25.40	22.86	10.92	5.84	2.79
87914-2021	-------	-------	-------	-------	20	-------	1	25.40	22.86	12.25	7.00	2.96
87914-2031	-------	-------	-------	-------	20	-------	1	25.40	22.86	13.38	6.09	5.00
87914-2012	-------	-------	-------	-------	20	-------	2	25.40	22.86	10.92	5.84	2.79
87914-2022	-------	-------	-------	-------	20	-------	2	25.40	22.86	12.25	7.00	2.96
87914-2032	-------	-------	-------	-------	20	-------	2	25.40	22.86	13.38	6.09	5.00
87914-2013	-------	-------	-------	-------	20	-------	3	25.40	22.86	10.92	5.84	2.79
87914-2023	-------	-------	-------	-------	20	-------	3	25.40	22.86	12.25	7.00	2.96
87914-2033	-------	-------	-------	-------	20	-------	3	25.40	22.86	13.38	6.09	5.00
87914-2014	-------	-------	-------	-------	20	-------	4	25.40	22.86	10.92	5.84	2.79
87914-2024	-------	-------	-------	-------	20	-------	4	25.40	22.86	12.25	7.00	2.96
87914-2034	-------	-------	-------	-------	20	-------	4	25.40	22.86	13.38	6.09	5.00
87914-2015	-------	-------	-------	-------	20	-------	5	25.40	22.86	10.92	5.84	2.79
87914-2025	-------	-------	-------	-------	20	-------	5	25.40	22.86	12.25	7.00	2.96
87914-2035	-------	-------	-------	-------	20	-------	5	25.40	22.86	13.38	6.09	5.00
87914-2016	-------	-------	-------	-------	20	-------	6	25.40	22.86	10.92	5.84	2.79
87914-2017	-------	-------	-------	-------	20	-------	6	25.40	22.86	10.92	5.84	2.79
87914-2026	-------	-------	-------	-------	20	-------	6	25.40	22.86	12.25	7.00	2.96
87914-2027	-------	-------	-------	-------	20	-------	6	25.40	22.86	12.25	7.00	2.96
87914-2036	-------	-------	-------	-------	20	-------	6	25.40	22.86	13.38	6.09	5.00
87914-2037	-------	-------	-------	-------	20	-------	6	25.40	22.86	13.38	6.09	5.00
87914-2001	-------	-------	-------	-------	20	-------	4	25.40	22.86	13.21	8.13	2.79
87914-2002	-------	-------	-------	-------	20	-------	5	25.40	22.86	13.21	8.13	2.79
87914-2003	-------	-------	-------	-------	20	-------	6	25.40	22.86	13.21	8.13	2.79
87914-2004	-------	-------	-------	-------	20	-------	4	25.40	22.86	11.11	6.10	2.72
87914-2005	-------	-------	-------	-------	20	-------	5	25.40	22.86	11.11	6.10	2.72
87914-2006	-------	-------	-------	-------	20	-------	6	25.40	22.86	11.11	6.10	2.72
87914-2008	-------	-------	-------	-------	20	-------	6	25.40	22.86	11.11	6.10	2.72
87914-2051	-------	-------	-------	-------	20	-------	6	25.40	22.86	18.29	13.00	3.00
87914-0201	-------	-------	-------	-------	20	-------	5	25.40	22.86	18.84	13.46	3.09
87914-0202	-------	-------	-------	-------	20	-------	5	25.40	22.86	18.84	13.46	3.09

THIS DRAWING CONTAINS INFORMATION THAT IS PROPRIETARY TO MOLEX ELECTRONIC TECHNOLOGIES, LLC AND SHOULD NOT BE USED WITHOUT WRITTEN PERMISSION

DIMENSION UNITS	SCALE
mm	NTS

GENERAL TOLERANCES (UNLESS SPECIFIED)

	MM	INCH
4 PLACES	±	±
3 PLACES	±	±
2 PLACES	± 0.2	±
1 PLACE	±	±
0 PLACES	±	±
ANGULAR TOL	± 3.0 °	

DRAFT WHERE APPLICABLE MUST REMAIN WITHIN DIMENSIONS

CURRENT REV DESC:

EC NO: 717430
DRWN: DANUSA 2022/06/28
CHK'D: DANUSA 2022/08/11
APPR: MRAMAKRISHNA 2022/08/11

INITIAL REVISION:
DRWN: YLQIAO 2005/01/17
APPR: SCLOW 2005/01/25

molex

2.54MM PITCH
DUAL ROW HEADER SINGLE WAFER, T/H

PRODUCT CUSTOMER DRAWING

THIRD ANGLE PROJECTION	DRAWING	SERIES	MATERIAL NUMBER	CUSTOMER	SHEET NUMBER
	A3-SIZE	87914	SEE TABLE	GENERAL MARKET	15 OF 45

DOCUMENT NUMBER	DOC TYPE	DOC PART	REVISION
SD-87914-013	PSD	000	D23

DOCUMENT STATUS	P1	RELEASE DATE	2022/08/11 06:33:58

FORMAT: Met-lega-master-tb-prod-A3
REVISION: E
DATE: 2020/01/14

PART NO FOR TRAY PACKAGING	PART NO. FOR TUBE WITHOUT CAP PACKAGING	PART NO. FOR TUBE WITH CAP PACKAGING	PART NO. FOR TAPE & REEL WITHOUT CAP PACKAGING	PART NO. FOR TAPE & REEL WITH CAP PACKAGING	CKT SIZE	VOID POSITION	PLATING TYPE	DIMENSION				
								A	B	F	M	P
87914-2211	-------	-------	-------	-------	22	-------	1	27.94	25.40	10.92	5.84	2.79
87914-2221	-------	-------	-------	-------	22	-------	1	27.94	25.40	12.25	7.00	2.96
87914-2231	-------	-------	-------	-------	22	-------	1	27.94	25.40	13.38	6.09	5.00
87914-2212	-------	-------	-------	-------	22	-------	2	27.94	25.40	10.92	5.84	2.79
87914-2222	-------	-------	-------	-------	22	-------	2	27.94	25.40	12.25	7.00	2.96
87914-2232	-------	-------	-------	-------	22	-------	2	27.94	25.40	13.38	6.09	5.00
87914-2213	-------	-------	-------	-------	22	-------	3	27.94	25.40	10.92	5.84	2.79
87914-2223	-------	-------	-------	-------	22	-------	3	27.94	25.40	12.25	7.00	2.96
87914-2233	-------	-------	-------	-------	22	-------	3	27.94	25.40	13.38	6.09	5.00
87914-2214	-------	-------	-------	-------	22	-------	4	27.94	25.40	10.92	5.84	2.79
87914-2224	-------	-------	-------	-------	22	-------	4	27.94	25.40	12.25	7.00	2.96
87914-2234	-------	-------	-------	-------	22	-------	4	27.94	25.40	13.38	6.09	5.00
87914-2215	-------	-------	-------	-------	22	-------	5	27.94	25.40	10.92	5.84	2.79
87914-2225	-------	-------	-------	-------	22	-------	5	27.94	25.40	12.25	7.00	2.96
87914-2235	-------	-------	-------	-------	22	-------	5	27.94	25.40	13.38	6.09	5.00
87914-2216	-------	-------	-------	-------	22	-------	6	27.94	25.40	10.92	5.84	2.79
87914-2217	-------	-------	-------	-------	22	-------	6	27.94	25.40	10.92	5.84	2.79
87914-2226	-------	-------	-------	-------	22	-------	6	27.94	25.40	12.25	7.00	2.96
87914-2227	-------	-------	-------	-------	22	-------	6	27.94	25.40	12.25	7.00	2.96
87914-2236	-------	-------	-------	-------	22	-------	6	27.94	25.40	13.38	6.09	5.00
87914-2201	-------	-------	-------	-------	22	-------	4	27.94	25.40	13.21	8.13	2.79
87914-2202	-------	-------	-------	-------	22	-------	5	27.94	25.40	13.21	8.13	2.79
87914-2203	-------	-------	-------	-------	22	-------	6	27.94	25.40	13.21	8.13	2.79
87914-2204	-------	-------	-------	-------	22	-------	4	27.94	25.40	11.11	6.10	2.72
87914-2205	-------	-------	-------	-------	22	-------	5	27.94	25.40	11.11	6.10	2.72
87914-2206	-------	-------	-------	-------	22	-------	6	27.94	25.40	11.11	6.10	2.72
87914-2207	-------	-------	-------	-------	22	-------	6	27.94	25.40	11.11	6.10	2.72

THIS DRAWING CONTAINS INFORMATION THAT IS PROPRIETARY TO MOLEX ELECTRONIC TECHNOLOGIES, LLC AND SHOULD NOT BE USED WITHOUT WRITTEN PERMISSION

DIMENSION UNITS	SCALE
mm	NTS

GENERAL TOLERANCES (UNLESS SPECIFIED)

	MM	INCH
4 PLACES	±	±
3 PLACES	±	±
2 PLACES	± 0.2	±
1 PLACE	±	±
0 PLACES	±	±
ANGULAR TOL	± 3.0 °	

DRAFT WHERE APPLICABLE MUST REMAIN WITHIN DIMENSIONS

CURRENT REV DESC:

EC NO: 717430
DRWN: DANUSA 2022/06/28
CHK'D: DANUSA 2022/08/11
APPR: MRAMAKRISHNA 2022/08/11

INITIAL REVISION:
DRWN: YLQIAO 2005/01/17
APPR: SCLOW 2005/01/25

THIRD ANGLE PROJECTION | DRAWING: A3-SIZE | SERIES: 87914

molex

2.54MM PITCH
DUAL ROW HEADER SINGLE WAFER, T/H

PRODUCT CUSTOMER DRAWING

DOCUMENT NUMBER	DOC TYPE	DOC PART	REVISION
SD-87914-013	PSD	000	D23

MATERIAL NUMBER	CUSTOMER	SHEET NUMBER
SEE TABLE	GENERAL MARKET	16 OF 45

DOCUMENT STATUS	P1	RELEASE DATE	2022/08/11 06:33:58

FORMAT: Met-lega-master-tb-prod-A3
REVISION: E
DATE: 2020/01/14

PART NO FOR TRAY PACKAGING	PART NO. FOR TUBE WITHOUT CAP PACKAGING	PART NO. FOR TUBE WITH CAP PACKAGING	PART NO. FOR TAPE & REEL WITHOUT CAP PACKAGING	PART NO. FOR TAPE & REEL WITH CAP PACKAGING	CKT SIZE	VOID POSITION	PLATING TYPE	DIMENSION				
								A	B	F	M	P
87914-2411	-------	-------	-------	-------	24	-------	1	30.48	27.94	10.92	5.84	2.79
87914-2421	-------	-------	-------	-------	24	-------	1	30.48	27.94	12.25	7.00	2.96
87914-2431	-------	-------	-------	-------	24	-------	1	30.48	27.94	13.38	6.09	5.00
87914-2412	-------	-------	-------	-------	24	-------	2	30.48	27.94	10.92	5.84	2.79
87914-2422	-------	-------	-------	-------	24	-------	2	30.48	27.94	12.25	7.00	2.96
87914-2432	-------	-------	-------	-------	24	-------	2	30.48	27.94	13.38	6.09	5.00
87914-2413	-------	-------	-------	-------	24	-------	3	30.48	27.94	10.92	5.84	2.79
87914-2423	-------	-------	-------	-------	24	-------	3	30.48	27.94	12.25	7.00	2.96
87914-2433	-------	-------	-------	-------	24	-------	3	30.48	27.94	13.38	6.09	5.00
87914-2414	-------	-------	-------	-------	24	-------	4	30.48	27.94	10.92	5.84	2.79
87914-2424	-------	-------	-------	-------	24	-------	4	30.48	27.94	12.25	7.00	2.96
87914-2434	-------	-------	-------	-------	24	-------	4	30.48	27.94	13.38	6.09	5.00
87914-2415	-------	-------	-------	-------	24	-------	5	30.48	27.94	10.92	5.84	2.79
87914-2425	-------	-------	-------	-------	24	-------	5	30.48	27.94	12.25	7.00	2.96
87914-2435	-------	-------	-------	-------	24	-------	5	30.48	27.94	13.38	6.09	5.00
87914-2416	-------	-------	-------	-------	24	-------	6	30.48	27.94	10.92	5.84	2.79
87914-2417	-------	-------	-------	-------	24	-------	6	30.48	27.94	10.92	5.84	2.79
87914-2426	-------	-------	-------	-------	24	-------	6	30.48	27.94	12.25	7.00	2.96
87914-2427	-------	-------	-------	-------	24	-------	6	30.48	27.94	12.25	7.00	2.96
87914-2436	-------	-------	-------	-------	24	-------	6	30.48	27.94	13.38	6.09	5.00
87914-2401	-------	-------	-------	-------	24	-------	4	30.48	27.94	13.21	8.13	2.79
87914-2402	-------	-------	-------	-------	24	-------	5	30.48	27.94	13.21	8.13	2.79
87914-2403	-------	-------	-------	-------	24	-------	6	30.48	27.94	13.21	8.13	2.79
87914-2404	-------	-------	-------	-------	24	-------	4	30.48	27.94	11.11	6.10	2.72
87914-2405	-------	-------	-------	-------	24	-------	5	30.48	27.94	11.11	6.10	2.72
87914-2406	-------	-------	-------	-------	24	-------	6	30.48	27.94	11.11	6.10	2.72
87914-2407	-------	-------	-------	-------	24	-------	6	30.48	27.94	11.11	6.10	2.72

THIS DRAWING CONTAINS INFORMATION THAT IS PROPRIETARY TO MOLEX ELECTRONIC TECHNOLOGIES, LLC AND SHOULD NOT BE USED WITHOUT WRITTEN PERMISSION

DIMENSION UNITS	SCALE
mm	NTS

GENERAL TOLERANCES (UNLESS SPECIFIED)

	MM	INCH
4 PLACES	±	±
3 PLACES	±	±
2 PLACES	± 0.2	±
1 PLACE	±	±
0 PLACES	±	±
ANGULAR TOL	± 3.0 °	

DRAFT WHERE APPLICABLE MUST REMAIN WITHIN DIMENSIONS

CURRENT REV DESC:

EC NO: 717430
DRWN: DANUSA 2022/06/28
CHK'D: DANUSA 2022/08/11
APPR: MRAMAKRISHNA 2022/08/11

INITIAL REVISION:
DRWN: YLQIAO 2005/01/17
APPR: SCLOW 2005/01/25

THIRD ANGLE PROJECTION | DRAWING: A3-SIZE | SERIES: 87914

molex

2.54MM PITCH
DUAL ROW HEADER SINGLE WAFER, T/H

PRODUCT CUSTOMER DRAWING

DOCUMENT NUMBER	DOC TYPE	DOC PART	REVISION
SD-87914-013	PSD	000	D23

MATERIAL NUMBER	CUSTOMER	SHEET NUMBER
SEE TABLE	GENERAL MARKET	17 OF 45

DOCUMENT STATUS	P1	RELEASE DATE	2022/08/11 06:33:58

FORMAT: Met-lega-master-tb-prod-A3
REVISION: E
DATE: 2020/01/14

PART NO FOR TRAY PACKAGING	PART NO. FOR TUBE WITHOUT CAP PACKAGING	PART NO. FOR TUBE WITH CAP PACKAGING	PART NO. FOR TAPE & REEL WITHOUT CAP PACKAGING	PART NO. FOR TAPE & REEL WITH CAP PACKAGING	CKT SIZE	VOID POSITION	PLATING TYPE	DIMENSION				
								A	B	F	M	P
87914-2611	-------	-------	-------	-------	26	-------	1	33.02	30.48	10.92	5.84	2.79
87914-2621	-------	-------	-------	-------	26	-------	1	33.02	30.48	12.25	7.00	2.96
87914-2631	-------	-------	-------	-------	26	-------	1	33.02	30.48	13.38	6.09	5.00
87914-2612	-------	-------	-------	-------	26	-------	2	33.02	30.48	10.92	5.84	2.79
87914-2622	-------	-------	-------	-------	26	-------	2	33.02	30.48	12.25	7.00	2.96
87914-2632	-------	-------	-------	-------	26	-------	2	33.02	30.48	13.38	6.09	5.00
87914-2613	-------	-------	-------	-------	26	-------	3	33.02	30.48	10.92	5.84	2.79
87914-2623	-------	-------	-------	-------	26	-------	3	33.02	30.48	12.25	7.00	2.96
87914-2633	-------	-------	-------	-------	26	-------	3	33.02	30.48	13.38	6.09	5.00
87914-2614	-------	-------	-------	-------	26	-------	4	33.02	30.48	10.92	5.84	2.79
87914-2624	-------	-------	-------	-------	26	-------	4	33.02	30.48	12.25	7.00	2.96
87914-2634	-------	-------	-------	-------	26	-------	4	33.02	30.48	13.38	6.09	5.00
87914-2615	-------	-------	-------	-------	26	-------	5	33.02	30.48	10.92	5.84	2.79
87914-2625	-------	-------	-------	-------	26	-------	5	33.02	30.48	12.25	7.00	2.96
87914-2635	-------	-------	-------	-------	26	-------	5	33.02	30.48	13.38	6.09	5.00
87914-2616	-------	-------	-------	-------	26	-------	6	33.02	30.48	10.92	5.84	2.79
87914-2617	-------	-------	-------	-------	26	-------	6	33.02	30.48	10.92	5.84	2.79
87914-2626	-------	-------	-------	-------	26	-------	6	33.02	30.48	12.25	7.00	2.96
87914-2627	-------	-------	-------	-------	26	-------	6	33.02	30.48	12.25	7.00	2.96
87914-2636	-------	-------	-------	-------	26	-------	6	33.02	30.48	13.38	6.09	5.00
87914-2601	-------	-------	-------	-------	26	-------	4	33.02	30.48	13.21	8.13	2.79
87914-2602	-------	-------	-------	-------	26	-------	5	33.02	30.48	13.21	8.13	2.79
87914-2603	-------	-------	-------	-------	26	-------	6	33.02	30.48	13.21	8.13	2.79
87914-2604	-------	-------	-------	-------	26	-------	4	33.02	30.48	11.11	6.10	2.72
87914-2605	-------	-------	-------	-------	26	-------	5	33.02	30.48	11.11	6.10	2.72
87914-2606	-------	-------	-------	-------	26	-------	6	33.02	30.48	11.11	6.10	2.72
87914-2607	-------	-------	-------	-------	26	-------	6	33.02	30.48	11.11	6.10	2.72

THIS DRAWING CONTAINS INFORMATION THAT IS PROPRIETARY TO MOLEX ELECTRONIC TECHNOLOGIES, LLC AND SHOULD NOT BE USED WITHOUT WRITTEN PERMISSION

DIMENSION UNITS	SCALE
mm	NTS

GENERAL TOLERANCES (UNLESS SPECIFIED)

	MM	INCH
4 PLACES	±	±
3 PLACES	±	±
2 PLACES	± 0.2	±
1 PLACE	±	±
0 PLACES	±	±
ANGULAR TOL	± 3.0 °	

DRAFT WHERE APPLICABLE MUST REMAIN WITHIN DIMENSIONS

CURRENT REV DESC:

EC NO: 717430
DRWN: DANUSA 2022/06/28
CHK'D: DANUSA 2022/08/11
APPR: MRAMAKRISHNA 2022/08/11

INITIAL REVISION:
DRWN: YLQIAO 2005/01/17
APPR: SCLOW 2005/01/25

THIRD ANGLE PROJECTION | DRAWING: A3-SIZE | SERIES: 87914

molex

2.54MM PITCH
DUAL ROW HEADER SINGLE WAFER, T/H

PRODUCT CUSTOMER DRAWING

DOCUMENT NUMBER	DOC TYPE	DOC PART	REVISION
SD-87914-013	PSD	000	D23

MATERIAL NUMBER	CUSTOMER	SHEET NUMBER
SEE TABLE	GENERAL MARKET	18 OF 45

DOCUMENT STATUS	P1	RELEASE DATE	2022/08/11 06:33:58

FORMAT: Met-lega-master-tb-prod-A3
REVISION: E
DATE: 2020/01/14

PART NO FOR TRAY PACKAGING	PART NO. FOR TUBE WITHOUT CAP PACKAGING	PART NO. FOR TUBE WITH CAP PACKAGING	PART NO. FOR TAPE & REEL WITHOUT CAP PACKAGING	PART NO. FOR TAPE & REEL WITH CAP PACKAGING	CKT SIZE	VOID POSITION	PLATING TYPE	DIMENSION				
								A	B	F	M	P
87914-2811	-------	-------	-------	-------	28	-------	1	35.56	33.02	10.92	5.84	2.79
87914-2821	-------	-------	-------	-------	28	-------	1	35.56	33.02	12.25	7.00	2.96
87914-2831	-------	-------	-------	-------	28	-------	1	35.56	33.02	13.38	6.09	5.00
87914-2812	-------	-------	-------	-------	28	-------	2	35.56	33.02	10.92	5.84	2.79
87914-2822	-------	-------	-------	-------	28	-------	2	35.56	33.02	12.25	7.00	2.96
87914-2832	-------	-------	-------	-------	28	-------	2	35.56	33.02	13.38	6.09	5.00
87914-2813	-------	-------	-------	-------	28	-------	3	35.56	33.02	10.92	5.84	2.79
87914-2823	-------	-------	-------	-------	28	-------	3	35.56	33.02	12.25	7.00	2.96
87914-2833	-------	-------	-------	-------	28	-------	3	35.56	33.02	13.38	6.09	5.00
87914-2814	-------	-------	-------	-------	28	-------	4	35.56	33.02	10.92	5.84	2.79
87914-2824	-------	-------	-------	-------	28	-------	4	35.56	33.02	12.25	7.00	2.96
87914-2834	-------	-------	-------	-------	28	-------	4	35.56	33.02	13.38	6.09	5.00
87914-2815	-------	-------	-------	-------	28	-------	5	35.56	33.02	10.92	5.84	2.79
87914-2825	-------	-------	-------	-------	28	-------	5	35.56	33.02	12.25	7.00	2.96
87914-2835	-------	-------	-------	-------	28	-------	5	35.56	33.02	13.38	6.09	5.00
87914-2816	-------	-------	-------	-------	28	-------	6	35.56	33.02	10.92	5.84	2.79
87914-2817	-------	-------	-------	-------	28	-------	6	35.56	33.02	10.92	5.84	2.79
87914-2826	-------	-------	-------	-------	28	-------	6	35.56	33.02	12.25	7.00	2.96
87914-2827	-------	-------	-------	-------	28	-------	6	35.56	33.02	12.25	7.00	2.96
87914-2836	-------	-------	-------	-------	28	-------	6	35.56	33.02	13.38	6.09	5.00
87914-2801	-------	-------	-------	-------	28	-------	4	35.56	33.02	13.21	8.13	2.79
87914-2802	-------	-------	-------	-------	28	-------	5	35.56	33.02	13.21	8.13	2.79
87914-2803	-------	-------	-------	-------	28	-------	6	35.56	33.02	13.21	8.13	2.79
87914-2804	-------	-------	-------	-------	28	-------	4	35.56	33.02	11.11	6.10	2.72
87914-2805	-------	-------	-------	-------	28	-------	5	35.56	33.02	11.11	6.10	2.72
87914-2806	-------	-------	-------	-------	28	-------	6	35.56	33.02	11.11	6.10	2.72
87914-2807	-------	-------	-------	-------	28	-------	6	35.56	33.02	11.11	6.10	2.72

THIS DRAWING CONTAINS INFORMATION THAT IS PROPRIETARY TO MOLEX ELECTRONIC TECHNOLOGIES, LLC AND SHOULD NOT BE USED WITHOUT WRITTEN PERMISSION

DIMENSION UNITS	SCALE
mm	NTS

GENERAL TOLERANCES (UNLESS SPECIFIED)

	MM	INCH
4 PLACES	±	±
3 PLACES	±	±
2 PLACES	± 0.2	±
1 PLACE	±	±
0 PLACES	±	±
ANGULAR TOL	± 3.0 °	

DRAFT WHERE APPLICABLE MUST REMAIN WITHIN DIMENSIONS

CURRENT REV DESC:

EC NO: 717430
DRWN: DANUSA 2022/06/28
CHK'D: DANUSA 2022/08/11
APPR: MRAMAKRISHNA 2022/08/11

INITIAL REVISION:
DRWN: YLQIAO 2005/01/17
APPR: SCLOW 2005/01/25

THIRD ANGLE PROJECTION | DRAWING: A3-SIZE | SERIES: 87914

molex

2.54MM PITCH
DUAL ROW HEADER SINGLE WAFER, T/H

PRODUCT CUSTOMER DRAWING

DOCUMENT NUMBER	DOC TYPE	DOC PART	REVISION
SD-87914-013	PSD	000	D23

MATERIAL NUMBER	CUSTOMER	SHEET NUMBER
SEE TABLE	GENERAL MARKET	19 OF 45

DOCUMENT STATUS	P1	RELEASE DATE	2022/08/11 06:33:58

FORMAT: Met-lega-master-tb-prod-A3
REVISION: E
DATE: 2020/01/14

PART NO FOR TRAY PACKAGING	PART NO. FOR TUBE WITHOUT CAP PACKAGING	PART NO. FOR TUBE WITH CAP PACKAGING	PART NO. FOR TAPE & REEL WITHOUT CAP PACKAGING	PART NO. FOR TAPE & REEL WITH CAP PACKAGING	CKT SIZE	VOID POSITION	PLATING TYPE	DIMENSION					
								A	B	F	M	P	G
87914-3011	-------	-------	-------	-------	30	-------	1	38.10	35.56	10.92	5.84	2.79	---
87914-3021	-------	-------	-------	-------	30	-------	1	38.10	35.56	12.25	7.00	2.96	---
87914-3031	-------	-------	-------	-------	30	-------	1	38.10	35.56	13.38	6.09	5.00	---
87914-3012	-------	-------	-------	-------	30	-------	2	38.10	35.56	10.92	5.84	2.79	---
87914-3022	-------	-------	-------	-------	30	-------	2	38.10	35.56	12.25	7.00	2.96	---
87914-3032	-------	-------	-------	-------	30	-------	2	38.10	35.56	13.38	6.09	5.00	---
87914-3013	-------	-------	-------	-------	30	-------	3	38.10	35.56	10.92	5.84	2.79	---
87914-3023	-------	-------	-------	-------	30	-------	3	38.10	35.56	12.25	7.00	2.96	---
87914-3033	-------	-------	-------	-------	30	-------	3	38.10	35.56	13.38	6.09	5.00	---
87914-3014	-------	-------	-------	-------	30	-------	4	38.10	35.56	10.92	5.84	2.79	---
87914-3024	-------	-------	-------	-------	30	-------	4	38.10	35.56	12.25	7.00	2.96	---
87914-3034	-------	-------	-------	-------	30	-------	4	38.10	35.56	13.38	6.09	5.00	---
87914-3015	-------	-------	-------	-------	30	-------	5	38.10	35.56	10.92	5.84	2.79	---
87914-3025	-------	-------	-------	-------	30	-------	5	38.10	35.56	12.25	7.00	2.96	---
87914-3035	-------	-------	-------	-------	30	-------	5	38.10	35.56	13.38	6.09	5.00	---
87914-3016	-------	-------	-------	-------	30	-------	6	38.10	35.56	10.92	5.84	2.79	---
87914-3017	-------	-------	-------	-------	30	-------	6	38.10	35.56	10.92	5.84	2.79	---
87914-3026	-------	-------	-------	-------	30	-------	6	38.10	35.56	12.25	7.00	2.96	---
87914-3027	-------	-------	-------	-------	30	-------	6	38.10	35.56	12.25	7.00	2.96	---
87914-3036	-------	-------	-------	-------	30	-------	6	38.10	35.56	13.38	6.09	5.00	---
87914-3001	-------	-------	-------	-------	30	-------	4	38.10	35.56	13.21	8.13	2.79	---
87914-3002	-------	-------	-------	-------	30	-------	5	38.10	35.56	13.21	8.13	2.79	---
87914-3003	-------	-------	-------	-------	30	-------	6	38.10	35.56	13.21	8.13	2.79	---
87914-3004	-------	-------	-------	-------	30	-------	4	38.10	35.56	11.11	6.10	2.72	---
87914-3005	-------	-------	-------	-------	30	-------	5	38.10	35.56	11.11	6.10	2.72	---
87914-3006	-------	-------	-------	-------	30	-------	6	38.10	35.56	11.11	6.10	2.72	---
87914-3007	-------	-------	-------	-------	30	-------	6	38.10	35.56	11.11	6.10	2.72	---
-------	-------	-------	-------	87914-3037	30	-------	6	38.10	35.56	15.29	10.00	3.00	16.29

THIS DRAWING CONTAINS INFORMATION THAT IS PROPRIETARY TO MOLEX ELECTRONIC TECHNOLOGIES, LLC AND SHOULD NOT BE USED WITHOUT WRITTEN PERMISSION

DIMENSION UNITS	SCALE
mm	NTS

GENERAL TOLERANCES (UNLESS SPECIFIED)

	MM	INCH
4 PLACES	±	±
3 PLACES	±	±
2 PLACES	± 0.2	±
1 PLACE	±	±
0 PLACES	±	±
ANGULAR TOL	± 3.0 °	

DRAFT WHERE APPLICABLE MUST REMAIN WITHIN DIMENSIONS

CURRENT REV DESC:

EC NO: 717430
DRWN: DANUSA 2022/06/28
CHK'D: DANUSA 2022/08/11
APPR: MRAMAKRISHNA 2022/08/11

INITIAL REVISION:
DRWN: YLQIAO 2005/01/17
APPR: SCLOW 2005/01/25

molex

2.54MM PITCH
DUAL ROW HEADER SINGLE WAFER, T/H

PRODUCT CUSTOMER DRAWING

DOCUMENT NUMBER	DOC TYPE	DOC PART	REVISION
SD-87914-013	PSD	000	D23

THIRD ANGLE PROJECTION	DRAWING	SERIES	MATERIAL NUMBER	CUSTOMER	SHEET NUMBER
	A3-SIZE	87914	SEE TABLE	GENERAL MARKET	20 OF 45

DOCUMENT STATUS	P1	RELEASE DATE	2022/08/11 06:33:58

FORMAT: Met-lega-master-tb-prod-A3
REVISION: E
DATE: 2020/01/14

PART NO FOR TRAY PACKAGING	PART NO FOR BULK PACKAGING	PART NO. FOR TUBE WITHOUT CAP PACKAGING	PART NO. FOR TUBE WITH CAP PACKAGING	PART NO. FOR TAPE & REEL WITHOUT CAP PACKAGING	PART NO. FOR TAPE & REEL WITH CAP PACKAGING	CKT SIZE	VOID POSITION	PLATING TYPE	DIMENSION				
									A	B	F	M	P
-------	87914-0032	-------	-------	-------	-------	32	-------	5	40.64	38.10	7.62	3.05	2.28
87914-3211	-------	-------	-------	-------	-------	32	-------	1	40.64	38.10	10.92	5.84	2.79
87914-3221	-------	-------	-------	-------	-------	32	-------	1	40.64	38.10	12.25	7.00	2.96
87914-3231	-------	-------	-------	-------	-------	32	-------	1	40.64	38.10	13.38	6.09	5.00
87914-3212	-------	-------	-------	-------	-------	32	-------	2	40.64	38.10	10.92	5.84	2.79
87914-3222	-------	-------	-------	-------	-------	32	-------	2	40.64	38.10	12.25	7.00	2.96
87914-3232	-------	-------	-------	-------	-------	32	-------	2	40.64	38.10	13.38	6.09	5.00
87914-3213	-------	-------	-------	-------	-------	32	-------	3	40.64	38.10	10.92	5.84	2.79
87914-3223	-------	-------	-------	-------	-------	32	-------	3	40.64	38.10	12.25	7.00	2.96
87914-3233	-------	-------	-------	-------	-------	32	-------	3	40.64	38.10	13.38	6.09	5.00
87914-3214	-------	-------	-------	-------	-------	32	-------	4	40.64	38.10	10.92	5.84	2.79
87914-3224	-------	-------	-------	-------	-------	32	-------	4	40.64	38.10	12.25	7.00	2.96
87914-3234	-------	-------	-------	-------	-------	32	-------	4	40.64	38.10	13.38	6.09	5.00
87914-3215	-------	-------	-------	-------	-------	32	-------	5	40.64	38.10	10.92	5.84	2.79
87914-3225	-------	-------	-------	-------	-------	32	-------	5	40.64	38.10	12.25	7.00	2.96
87914-3235	-------	-------	-------	-------	-------	32	-------	5	40.64	38.10	13.38	6.09	5.00
87914-3216	-------	-------	-------	-------	-------	32	-------	6	40.64	38.10	10.92	5.84	2.79
87914-3217	-------	-------	-------	-------	-------	32	-------	6	40.64	38.10	10.92	5.84	2.79
87914-3226	-------	-------	-------	-------	-------	32	-------	6	40.64	38.10	12.25	7.00	2.96
87914-3227	-------	-------	-------	-------	-------	32	-------	6	40.64	38.10	12.25	7.00	2.96
87914-3236	-------	-------	-------	-------	-------	32	-------	6	40.64	38.10	13.38	6.09	5.00
87914-3201	-------	-------	-------	-------	-------	32	-------	4	40.64	38.10	13.21	8.13	2.79
87914-3202	-------	-------	-------	-------	-------	32	-------	5	40.64	38.10	13.21	8.13	2.79
87914-3203	-------	-------	-------	-------	-------	32	-------	6	40.64	38.10	13.21	8.13	2.79
87914-3207	-------	-------	-------	-------	-------	32	-------	6	40.64	38.10	13.21	8.13	2.79
87914-3204	-------	-------	-------	-------	-------	32	-------	4	40.64	38.10	11.11	6.10	2.72
87914-3205	-------	-------	-------	-------	-------	32	-------	5	40.64	38.10	11.11	6.10	2.72
87914-3206	-------	-------	-------	-------	-------	32	-------	6	40.64	38.10	11.11	6.10	2.72
87914-3208	-------	-------	-------	-------	-------	32	-------	6	40.64	38.10	11.11	6.10	2.72

THIS DRAWING CONTAINS INFORMATION THAT IS PROPRIETARY TO MOLEX ELECTRONIC TECHNOLOGIES, LLC AND SHOULD NOT BE USED WITHOUT WRITTEN PERMISSION

DIMENSION UNITS	SCALE
mm	NTS

GENERAL TOLERANCES (UNLESS SPECIFIED)

	MM	INCH
4 PLACES	±	±
3 PLACES	±	±
2 PLACES	± 0.2	±
1 PLACE	±	±
0 PLACES	±	±
ANGULAR TOL	± 3.0 °	

DRAFT WHERE APPLICABLE MUST REMAIN WITHIN DIMENSIONS

CURRENT REV DESC:

EC NO: 717430
DRWN: DANUSA 2022/06/28
CHK'D: DANUSA 2022/08/11
APPR: MRAMAKRISHNA 2022/08/11

INITIAL REVISION:
DRWN: YLQIAO 2005/01/17
APPR: SCLOW 2005/01/25

molex

2.54MM PITCH
DUAL ROW HEADER SINGLE WAFER, T/H

PRODUCT CUSTOMER DRAWING

DOCUMENT NUMBER	DOC TYPE	DOC PART	REVISION
SD-87914-013	PSD	000	D23

THIRD ANGLE PROJECTION	DRAWING	SERIES	MATERIAL NUMBER	CUSTOMER	SHEET NUMBER
	A3-SIZE	87914	SEE TABLE	GENERAL MARKET	21 OF 45

DOCUMENT STATUS	P1	RELEASE DATE	2022/08/11 06:33:58

FORMAT: Met-lega-master-tb-prod-A3
REVISION: E
DATE: 2020/01/14

PART NO FOR TRAY PACKAGING	PART NO. FOR TUBE WITHOUT CAP PACKAGING	PART NO. FOR TUBE WITH CAP PACKAGING	PART NO. FOR TAPE & REEL WITHOUT CAP PACKAGING	PART NO. FOR TAPE & REEL WITH CAP PACKAGING	CKT SIZE	VOID POSITION	PLATING TYPE	DIMENSION				
								A	B	F	M	P
87914-3411	-------	-------	-------	-------	34	-------	1	43.18	40.64	10.92	5.84	2.79
87914-3421	-------	-------	-------	-------	34	-------	1	43.18	40.64	12.25	7.00	2.96
87914-3431	-------	-------	-------	-------	34	-------	1	43.18	40.64	13.38	6.09	5.00
87914-3412	-------	-------	-------	-------	34	-------	2	43.18	40.64	10.92	5.84	2.79
87914-3422	-------	-------	-------	-------	34	-------	2	43.18	40.64	12.25	7.00	2.96
87914-3432	-------	-------	-------	-------	34	-------	2	43.18	40.64	13.38	6.09	5.00
87914-3413	-------	-------	-------	-------	34	-------	3	43.18	40.64	10.92	5.84	2.79
87914-3423	-------	-------	-------	-------	34	-------	3	43.18	40.64	12.25	7.00	2.96
87914-3433	-------	-------	-------	-------	34	-------	3	43.18	40.64	13.38	6.09	5.00
87914-3414	-------	-------	-------	-------	34	-------	4	43.18	40.64	10.92	5.84	2.79
87914-3424	-------	-------	-------	-------	34	-------	4	43.18	40.64	12.25	7.00	2.96
87914-3434	-------	-------	-------	-------	34	-------	4	43.18	40.64	13.38	6.09	5.00
87914-3415	-------	-------	-------	-------	34	-------	5	43.18	40.64	10.92	5.84	2.79
87914-3425	-------	-------	-------	-------	34	-------	5	43.18	40.64	12.25	7.00	2.96
87914-3435	-------	-------	-------	-------	34	-------	5	43.18	40.64	13.38	6.09	5.00
87914-3416	-------	-------	-------	-------	34	-------	6	43.18	40.64	10.92	5.84	2.79
87914-3417	-------	-------	-------	-------	34	-------	6	43.18	40.64	10.92	5.84	2.79
87914-3426	-------	-------	-------	-------	34	-------	6	43.18	40.64	12.25	7.00	2.96
87914-3427	-------	-------	-------	-------	34	-------	6	43.18	40.64	12.25	7.00	2.96
87914-3436	-------	-------	-------	-------	34	-------	6	43.18	40.64	13.38	6.09	5.00
87914-3401	-------	-------	-------	-------	34	-------	4	43.18	40.64	13.21	8.13	2.79
87914-3402	-------	-------	-------	-------	34	-------	5	43.18	40.64	13.21	8.13	2.79
87914-3403	-------	-------	-------	-------	34	-------	6	43.18	40.64	13.21	8.13	2.79
87914-3404	-------	-------	-------	-------	34	-------	4	43.18	40.64	11.11	6.10	2.72
87914-3405	-------	-------	-------	-------	34	-------	5	43.18	40.64	11.11	6.10	2.72
87914-3406	-------	-------	-------	-------	34	-------	6	43.18	40.64	11.11	6.10	2.72
87914-3407	-------	-------	-------	-------	34	-------	6	43.18	40.64	11.11	6.10	2.72

THIS DRAWING CONTAINS INFORMATION THAT IS PROPRIETARY TO MOLEX ELECTRONIC TECHNOLOGIES, LLC AND SHOULD NOT BE USED WITHOUT WRITTEN PERMISSION

DIMENSION UNITS	SCALE
mm	NTS

GENERAL TOLERANCES (UNLESS SPECIFIED)

	MM	INCH
4 PLACES	±	±
3 PLACES	±	±
2 PLACES	± 0.2	±
1 PLACE	±	±
0 PLACES	±	±
ANGULAR TOL	± 3.0 °	

DRAFT WHERE APPLICABLE MUST REMAIN WITHIN DIMENSIONS

CURRENT REV DESC:

EC NO: 717430
DRWN: DANUSA 2022/06/28
CHK'D: DANUSA 2022/08/11
APPR: MRAMAKRISHNA 2022/08/11

INITIAL REVISION:
DRWN: YLQIAO 2005/01/17
APPR: SCLOW 2005/01/25

THIRD ANGLE PROJECTION | DRAWING: A3-SIZE | SERIES: 87914

molex

2.54MM PITCH
DUAL ROW HEADER SINGLE WAFER, T/H

PRODUCT CUSTOMER DRAWING

DOCUMENT NUMBER	DOC TYPE	DOC PART	REVISION
SD-87914-013	PSD	000	D23

MATERIAL NUMBER	CUSTOMER	SHEET NUMBER
SEE TABLE	GENERAL MARKET	22 OF 45

DOCUMENT STATUS	P1	RELEASE DATE	2022/08/11 06:33:58

FORMAT: Met-lega-master-tb-prod-A3
REVISION: E
DATE: 2020/01/14

PART NO FOR TRAY PACKAGING	PART NO. FOR TUBE WITHOUT CAP PACKAGING	PART NO. FOR TUBE WITH CAP PACKAGING	PART NO. FOR TAPE & REEL WITHOUT CAP PACKAGING	PART NO. FOR TAPE & REEL WITH CAP PACKAGING	CKT SIZE	VOID POSITION	PLATING TYPE	DIMENSION				
								A	B	F	M	P
87914-3611	-------	-------	-------	-------	36	-------	1	45.72	43.18	10.92	5.84	2.79
87914-3621	-------	-------	-------	-------	36	-------	1	45.72	43.18	12.25	7.00	2.96
87914-3631	-------	-------	-------	-------	36	-------	1	45.72	43.18	13.38	6.09	5.00
87914-3612	-------	-------	-------	-------	36	-------	2	45.72	43.18	10.92	5.84	2.79
87914-3622	-------	-------	-------	-------	36	-------	2	45.72	43.18	12.25	7.00	2.96
87914-3632	-------	-------	-------	-------	36	-------	2	45.72	43.18	13.38	6.09	5.00
87914-3613	-------	-------	-------	-------	36	-------	3	45.72	43.18	10.92	5.84	2.79
87914-3623	-------	-------	-------	-------	36	-------	3	45.72	43.18	12.25	7.00	2.96
87914-3633	-------	-------	-------	-------	36	-------	3	45.72	43.18	13.38	6.09	5.00
87914-3614	-------	-------	-------	-------	36	-------	4	45.72	43.18	10.92	5.84	2.79
87914-3624	-------	-------	-------	-------	36	-------	4	45.72	43.18	12.25	7.00	2.96
87914-3634	-------	-------	-------	-------	36	-------	4	45.72	43.18	13.38	6.09	5.00
87914-3615	-------	-------	-------	-------	36	-------	5	45.72	43.18	10.92	5.84	2.79
87914-3625	-------	-------	-------	-------	36	-------	5	45.72	43.18	12.25	7.00	2.96
87914-3635	-------	-------	-------	-------	36	-------	5	45.72	43.18	13.38	6.09	5.00
87914-3616	-------	-------	-------	-------	36	-------	6	45.72	43.18	10.92	5.84	2.79
87914-3617	-------	-------	-------	-------	36	-------	6	45.72	43.18	10.92	5.84	2.79
87914-3626	-------	-------	-------	-------	36	-------	6	45.72	43.18	12.25	7.00	2.96
87914-3627	-------	-------	-------	-------	36	-------	6	45.72	43.18	12.25	7.00	2.96
87914-3636	-------	-------	-------	-------	36	-------	6	45.72	43.18	13.38	6.09	5.00
87914-3601	-------	-------	-------	-------	36	-------	4	45.72	43.18	13.21	8.13	2.79
87914-3602	-------	-------	-------	-------	36	-------	5	45.72	43.18	13.21	8.13	2.79
87914-3603	-------	-------	-------	-------	36	-------	6	45.72	43.18	13.21	8.13	2.79
87914-3604	-------	-------	-------	-------	36	-------	4	45.72	43.18	11.11	6.10	2.72
87914-3605	-------	-------	-------	-------	36	-------	5	45.72	43.18	11.11	6.10	2.72
87914-3606	-------	-------	-------	-------	36	-------	6	45.72	43.18	11.11	6.10	2.72
87914-3607	-------	-------	-------	-------	36	-------	6	45.72	43.18	11.11	6.10	2.72

THIS DRAWING CONTAINS INFORMATION THAT IS PROPRIETARY TO MOLEX ELECTRONIC TECHNOLOGIES, LLC AND SHOULD NOT BE USED WITHOUT WRITTEN PERMISSION

DIMENSION UNITS	SCALE
mm	NTS

GENERAL TOLERANCES (UNLESS SPECIFIED)

	MM	INCH
4 PLACES	±	±
3 PLACES	±	±
2 PLACES	± 0.2	±
1 PLACE	±	±
0 PLACES	±	±
ANGULAR TOL	± 3.0 °	

DRAFT WHERE APPLICABLE MUST REMAIN WITHIN DIMENSIONS

CURRENT REV DESC:

EC NO: 717430
DRWN: DANUSA 2022/06/28
CHK'D: DANUSA 2022/08/11
APPR: MRAMAKRISHNA 2022/08/11

INITIAL REVISION:
DRWN: YLQIAO 2005/01/17
APPR: SCLOW 2005/01/25

THIRD ANGLE PROJECTION | DRAWING: A3-SIZE | SERIES: 87914

molex

2.54MM PITCH
DUAL ROW HEADER SINGLE WAFER, T/H

PRODUCT CUSTOMER DRAWING

DOCUMENT NUMBER	DOC TYPE	DOC PART	REVISION
SD-87914-013	PSD	000	D23

MATERIAL NUMBER	CUSTOMER	SHEET NUMBER
SEE TABLE	GENERAL MARKET	23 OF 45

DOCUMENT STATUS	P1	RELEASE DATE	2022/08/11 06:33:58

FORMAT: Met-lega-master-tb-prod-A3
REVISION: E
DATE: 2020/01/14

PART NO FOR TRAY PACKAGING	PART NO. FOR TUBE WITHOUT CAP PACKAGING	PART NO. FOR TUBE WITH CAP PACKAGING	PART NO. FOR TAPE & REEL WITHOUT CAP PACKAGING	PART NO. FOR TAPE & REEL WITH CAP PACKAGING	CKT SIZE	VOID POSITION	PLATING TYPE	DIMENSION				
								A	B	F	M	P
87914-3811	-------	-------	-------	-------	38	-------	1	48.26	45.72	10.92	5.84	2.79
87914-3821	-------	-------	-------	-------	38	-------	1	48.26	45.72	12.25	7.00	2.96
87914-3831	-------	-------	-------	-------	38	-------	1	48.26	45.72	13.38	6.09	5.00
87914-3812	-------	-------	-------	-------	38	-------	2	48.26	45.72	10.92	5.84	2.79
87914-3822	-------	-------	-------	-------	38	-------	2	48.26	45.72	12.25	7.00	2.96
87914-3832	-------	-------	-------	-------	38	-------	2	48.26	45.72	13.38	6.09	5.00
87914-3813	-------	-------	-------	-------	38	-------	3	48.26	45.72	10.92	5.84	2.79
87914-3823	-------	-------	-------	-------	38	-------	3	48.26	45.72	12.25	7.00	2.96
87914-3833	-------	-------	-------	-------	38	-------	3	48.26	45.72	13.38	6.09	5.00
87914-3814	-------	-------	-------	-------	38	-------	4	48.26	45.72	10.92	5.84	2.79
87914-3824	-------	-------	-------	-------	38	-------	4	48.26	45.72	12.25	7.00	2.96
87914-3834	-------	-------	-------	-------	38	-------	4	48.26	45.72	13.38	6.09	5.00
87914-3815	-------	-------	-------	-------	38	-------	5	48.26	45.72	10.92	5.84	2.79
87914-3825	-------	-------	-------	-------	38	-------	5	48.26	45.72	12.25	7.00	2.96
87914-3835	-------	-------	-------	-------	38	-------	5	48.26	45.72	13.38	6.09	5.00
87914-3816	-------	-------	-------	-------	38	-------	6	48.26	45.72	10.92	5.84	2.79
87914-3817	-------	-------	-------	-------	38	-------	6	48.26	45.72	10.92	5.84	2.79
87914-3826	-------	-------	-------	-------	38	-------	6	48.26	45.72	12.25	7.00	2.96
87914-3827	-------	-------	-------	-------	38	-------	6	48.26	45.72	12.25	7.00	2.96
87914-3836	-------	-------	-------	-------	38	-------	6	48.26	45.72	13.38	6.09	5.00
87914-3801	-------	-------	-------	-------	38	-------	4	48.26	45.72	13.21	8.13	2.79
87914-3802	-------	-------	-------	-------	38	-------	5	48.26	45.72	13.21	8.13	2.79
87914-3803	-------	-------	-------	-------	38	-------	6	48.26	45.72	13.21	8.13	2.79
87914-3804	-------	-------	-------	-------	38	-------	4	48.26	45.72	11.11	6.10	2.72
87914-3805	-------	-------	-------	-------	38	-------	5	48.26	45.72	11.11	6.10	2.72
87914-3806	-------	-------	-------	-------	38	-------	6	48.26	45.72	11.11	6.10	2.72
87914-3807	-------	-------	-------	-------	38	-------	6	48.26	45.72	11.11	6.10	2.72

THIS DRAWING CONTAINS INFORMATION THAT IS PROPRIETARY TO MOLEX ELECTRONIC TECHNOLOGIES, LLC AND SHOULD NOT BE USED WITHOUT WRITTEN PERMISSION

DIMENSION UNITS	SCALE
mm	NTS

GENERAL TOLERANCES (UNLESS SPECIFIED)

	MM	INCH
4 PLACES	±	±
3 PLACES	±	±
2 PLACES	± 0.2	±
1 PLACE	±	±
0 PLACES	±	±
ANGULAR TOL	± 3.0 °	

DRAFT WHERE APPLICABLE MUST REMAIN WITHIN DIMENSIONS

CURRENT REV DESC:

EC NO: 717430
DRWN: DANUSA 2022/06/28
CHK'D: DANUSA 2022/08/11
APPR: MRAMAKRISHNA 2022/08/11

INITIAL REVISION:
DRWN: YLQIAO 2005/01/17
APPR: SCLOW 2005/01/25

THIRD ANGLE PROJECTION | DRAWING: A3-SIZE | SERIES: 87914

molex

2.54MM PITCH
DUAL ROW HEADER SINGLE WAFER, T/H

PRODUCT CUSTOMER DRAWING

DOCUMENT NUMBER	DOC TYPE	DOC PART	REVISION
SD-87914-013	PSD	000	D23

MATERIAL NUMBER	CUSTOMER	SHEET NUMBER
SEE TABLE	GENERAL MARKET	24 OF 45

DOCUMENT STATUS	P1	RELEASE DATE	2022/08/11 06:33:58

FORMAT: Met-lega-master-tb-prod-A3
REVISION: E
DATE: 2020/01/14

PART NO FOR TRAY PACKAGING	PART NO. FOR TUBE WITHOUT CAP PACKAGING	PART NO. FOR TUBE WITH CAP PACKAGING	PART NO. FOR TAPE & REEL WITHOUT CAP PACKAGING	PART NO. FOR TAPE & REEL WITH CAP PACKAGING	CKT SIZE	VOID POSITION	PLATING TYPE	DIMENSION				
								A	B	F	M	P
87914-4011	-------	-------	-------	-------	40	-------	1	50.80	48.26	10.92	5.84	2.79
87914-4021	-------	-------	-------	-------	40	-------	1	50.80	48.26	12.25	7.00	2.96
87914-4031	-------	-------	-------	-------	40	-------	1	50.80	48.26	13.38	6.09	5.00
87914-4012	-------	-------	-------	-------	40	-------	2	50.80	48.26	10.92	5.84	2.79
87914-4022	-------	-------	-------	-------	40	-------	2	50.80	48.26	12.25	7.00	2.96
87914-4032	-------	-------	-------	-------	40	-------	2	50.80	48.26	13.38	6.09	5.00
87914-4013	-------	-------	-------	-------	40	-------	3	50.80	48.26	10.92	5.84	2.79
87914-4023	-------	-------	-------	-------	40	-------	3	50.80	48.26	12.25	7.00	2.96
87914-4033	-------	-------	-------	-------	40	-------	3	50.80	48.26	13.38	6.09	5.00
87914-4014	-------	-------	-------	-------	40	-------	4	50.80	48.26	10.92	5.84	2.79
87914-4024	-------	-------	-------	-------	40	-------	4	50.80	48.26	12.25	7.00	2.96
87914-4034	-------	-------	-------	-------	40	-------	4	50.80	48.26	13.38	6.09	5.00
87914-4015	-------	-------	-------	-------	40	-------	5	50.80	48.26	10.92	5.84	2.79
87914-4025	-------	-------	-------	-------	40	-------	5	50.80	48.26	12.25	7.00	2.96
87914-4035	-------	-------	-------	-------	40	-------	5	50.80	48.26	13.38	6.09	5.00
87914-4016	-------	-------	-------	-------	40	-------	6	50.80	48.26	10.92	5.84	2.79
87914-4017	-------	-------	-------	-------	40	-------	6	50.80	48.26	10.92	5.84	2.79
87914-4026	-------	-------	-------	-------	40	-------	6	50.80	48.26	12.25	7.00	2.96
87914-4027	-------	-------	-------	-------	40	-------	6	50.80	48.26	12.25	7.00	2.96
87914-4036	-------	-------	-------	-------	40	-------	6	50.80	48.26	13.38	6.09	5.00
87914-4001	-------	-------	-------	-------	40	-------	4	50.80	48.26	13.21	8.13	2.79
87914-4002	-------	-------	-------	-------	40	-------	5	50.80	48.26	13.21	8.13	2.79
87914-4003	-------	-------	-------	-------	40	-------	6	50.80	48.26	13.21	8.13	2.79
87914-4004	-------	-------	-------	-------	40	-------	4	50.80	48.26	11.11	6.10	2.72
87914-4005	-------	-------	-------	-------	40	-------	5	50.80	48.26	11.11	6.10	2.72
87914-4006	-------	-------	-------	-------	40	-------	6	50.80	48.26	11.11	6.10	2.72
87914-4007	-------	-------	-------	-------	40	-------	6	50.80	48.26	11.11	6.10	2.72

THIS DRAWING CONTAINS INFORMATION THAT IS PROPRIETARY TO MOLEX ELECTRONIC TECHNOLOGIES, LLC AND SHOULD NOT BE USED WITHOUT WRITTEN PERMISSION

DIMENSION UNITS	SCALE
mm	NTS

GENERAL TOLERANCES (UNLESS SPECIFIED)

	MM	INCH
4 PLACES	±	±
3 PLACES	±	±
2 PLACES	± 0.2	±
1 PLACE	±	±
0 PLACES	±	±
ANGULAR TOL	± 3.0 °	

DRAFT WHERE APPLICABLE MUST REMAIN WITHIN DIMENSIONS

CURRENT REV DESC:

EC NO: 717430
DRWN: DANUSA 2022/06/28
CHK'D: DANUSA 2022/08/11
APPR: MRAMAKRISHNA 2022/08/11

INITIAL REVISION:
DRWN: YLQIAO 2005/01/17
APPR: SCLOW 2005/01/25

THIRD ANGLE PROJECTION | DRAWING: A3-SIZE | SERIES: 87914

molex

2.54MM PITCH
DUAL ROW HEADER SINGLE WAFER, T/H

PRODUCT CUSTOMER DRAWING

DOCUMENT NUMBER	DOC TYPE	DOC PART	REVISION
SD-87914-013	PSD	000	D23

MATERIAL NUMBER	CUSTOMER	SHEET NUMBER
SEE TABLE	GENERAL MARKET	25 OF 45

DOCUMENT STATUS	P1	RELEASE DATE	2022/08/11 06:33:58

FORMAT: Met-lega-master-tb-prod-A3
REVISION: E
DATE: 2020/01/14

PART NO FOR TRAY PACKAGING	PART NO. FOR TUBE WITHOUT CAP PACKAGING	PART NO. FOR TUBE WITH CAP PACKAGING	PART NO. FOR TAPE & REEL WITHOUT CAP PACKAGING	PART NO. FOR TAPE & REEL WITH CAP PACKAGING	CKT SIZE	VOID POSITION	PLATING TYPE	DIMENSION				
								A	B	F	M	P
87914-4211	-------	-------	-------	-------	42	-------	1	53.34	50.80	10.92	5.84	2.79
87914-4221	-------	-------	-------	-------	42	-------	1	53.34	50.80	12.25	7.00	2.96
87914-4212	-------	-------	-------	-------	42	-------	2	53.34	50.80	10.92	5.84	2.79
87914-4222	-------	-------	-------	-------	42	-------	2	53.34	50.80	12.25	7.00	2.96
87914-4213	-------	-------	-------	-------	42	-------	3	53.34	50.80	10.92	5.84	2.79
87914-4223	-------	-------	-------	-------	42	-------	3	53.34	50.80	12.25	7.00	2.96
87914-4214	-------	-------	-------	-------	42	-------	4	53.34	50.80	10.92	5.84	2.79
87914-4224	-------	-------	-------	-------	42	-------	4	53.34	50.80	12.25	7.00	2.96
87914-4215	-------	-------	-------	-------	42	-------	5	53.34	50.80	10.92	5.84	2.79
87914-4225	-------	-------	-------	-------	42	-------	5	53.34	50.80	12.25	7.00	2.96
87914-4216	-------	-------	-------	-------	42	-------	6	53.34	50.80	10.92	5.84	2.79
87914-4217	-------	-------	-------	-------	42	-------	6	53.34	50.80	10.92	5.84	2.79
87914-4226	-------	-------	-------	-------	42	-------	6	53.34	50.80	12.25	7.00	2.96
87914-4227	-------	-------	-------	-------	42	-------	6	53.34	50.80	12.25	7.00	2.96
87914-4201	-------	-------	-------	-------	42	-------	4	53.34	50.80	13.21	8.13	2.79
87914-4202	-------	-------	-------	-------	42	-------	5	53.34	50.80	13.21	8.13	2.79
87914-4203	-------	-------	-------	-------	42	-------	6	53.34	50.80	13.21	8.13	2.79
87914-4204	-------	-------	-------	-------	42	-------	4	53.34	50.80	11.11	6.10	2.72
87914-4205	-------	-------	-------	-------	42	-------	5	53.34	50.80	11.11	6.10	2.72
87914-4206	-------	-------	-------	-------	42	-------	6	53.34	50.80	11.11	6.10	2.72
87914-4207	-------	-------	-------	-------	42	-------	6	53.34	50.80	11.11	6.10	2.72

THIS DRAWING CONTAINS INFORMATION THAT IS PROPRIETARY TO MOLEX ELECTRONIC TECHNOLOGIES, LLC AND SHOULD NOT BE USED WITHOUT WRITTEN PERMISSION

DIMENSION UNITS	SCALE
mm	NTS

GENERAL TOLERANCES (UNLESS SPECIFIED)

	MM	INCH
4 PLACES	±	±
3 PLACES	±	±
2 PLACES	± 0.2	±
1 PLACE	±	±
0 PLACES	±	±
ANGULAR TOL	± 3.0 °	

DRAFT WHERE APPLICABLE MUST REMAIN WITHIN DIMENSIONS

CURRENT REV DESC:

EC NO: 717430
DRWN: DANUSA 2022/06/28
CHK'D: DANUSA 2022/08/11
APPR: MRAMAKRISHNA 2022/08/11

INITIAL REVISION:
DRWN: YLQIAO 2005/01/17
APPR: SCLOW 2005/01/25

molex

2.54MM PITCH
DUAL ROW HEADER SINGLE WAFER, T/H

PRODUCT CUSTOMER DRAWING

THIRD ANGLE PROJECTION	DRAWING	SERIES	MATERIAL NUMBER	CUSTOMER	SHEET NUMBER
	A3-SIZE	87914	SEE TABLE	GENERAL MARKET	26 OF 45

DOCUMENT NUMBER	DOC TYPE	DOC PART	REVISION
SD-87914-013	PSD	000	D23

DOCUMENT STATUS	P1	RELEASE DATE	2022/08/11 06:33:58

FORMAT: Met-lega-master-tb-prod-A3
REVISION: E
DATE: 2020/01/14

PART NO FOR TRAY PACKAGING	PART NO. FOR TUBE WITHOUT CAP PACKAGING	PART NO. FOR TUBE WITH CAP PACKAGING	PART NO. FOR TAPE & REEL WITHOUT CAP PACKAGING	PART NO. FOR TAPE & REEL WITH CAP PACKAGING	CKT SIZE	VOID POSITION	PLATING TYPE	DIMENSION				
								A	B	F	M	P
87914-4411	-------	-------	-------	-------	44	-------	1	55.88	53.34	10.92	5.84	2.79
87914-4421	-------	-------	-------	-------	44	-------	1	55.88	53.34	12.25	7.00	2.96
87914-4412	-------	-------	-------	-------	44	-------	2	55.88	53.34	10.92	5.84	2.79
87914-4422	-------	-------	-------	-------	44	-------	2	55.88	53.34	12.25	7.00	2.96
87914-4413	-------	-------	-------	-------	44	-------	3	55.88	53.34	10.92	5.84	2.79
87914-4423	-------	-------	-------	-------	44	-------	3	55.88	53.34	12.25	7.00	2.96
87914-4414	-------	-------	-------	-------	44	-------	4	55.88	53.34	10.92	5.84	2.79
87914-4424	-------	-------	-------	-------	44	-------	4	55.88	53.34	12.25	7.00	2.96
87914-4415	-------	-------	-------	-------	44	-------	5	55.88	53.34	10.92	5.84	2.79
87914-4425	-------	-------	-------	-------	44	-------	5	55.88	53.34	12.25	7.00	2.96
87914-4416	-------	-------	-------	-------	44	-------	6	55.88	53.34	10.92	5.84	2.79
87914-4417	-------	-------	-------	-------	44	-------	6	55.88	53.34	10.92	5.84	2.79
87914-4426	-------	-------	-------	-------	44	-------	6	55.88	53.34	12.25	7.00	2.96
87914-4427	-------	-------	-------	-------	44	-------	6	55.88	53.34	12.25	7.00	2.96
87914-4401	-------	-------	-------	-------	44	-------	4	55.88	53.34	13.21	8.13	2.79
87914-4402	-------	-------	-------	-------	44	-------	5	55.88	53.34	13.21	8.13	2.79
87914-4403	-------	-------	-------	-------	44	-------	6	55.88	53.34	13.21	8.13	2.79
87914-4404	-------	-------	-------	-------	44	-------	4	55.88	53.34	11.11	6.10	2.72
87914-4405	-------	-------	-------	-------	44	-------	5	55.88	53.34	11.11	6.10	2.72
87914-4406	-------	-------	-------	-------	44	-------	6	55.88	53.34	11.11	6.10	2.72
87914-4407	-------	-------	-------	-------	44	-------	6	55.88	53.34	11.11	6.10	2.72

THIS DRAWING CONTAINS INFORMATION THAT IS PROPRIETARY TO MOLEX ELECTRONIC TECHNOLOGIES, LLC AND SHOULD NOT BE USED WITHOUT WRITTEN PERMISSION

DIMENSION UNITS	SCALE
mm	NTS

GENERAL TOLERANCES (UNLESS SPECIFIED)

	MM	INCH
4 PLACES	±	±
3 PLACES	±	±
2 PLACES	± 0.2	±
1 PLACE	±	±
0 PLACES	±	±
ANGULAR TOL	± 3.0 °	

DRAFT WHERE APPLICABLE MUST REMAIN WITHIN DIMENSIONS

CURRENT REV DESC:

EC NO: 717430
DRWN: DANUSA 2022/06/28
CHK'D: DANUSA 2022/08/11
APPR: MRAMAKRISHNA 2022/08/11

INITIAL REVISION:
DRWN: YLQIAO 2005/01/17
APPR: SCLOW 2005/01/25

molex

2.54MM PITCH
DUAL ROW HEADER SINGLE WAFER, T/H

PRODUCT CUSTOMER DRAWING

THIRD ANGLE PROJECTION	DRAWING	SERIES	MATERIAL NUMBER	CUSTOMER	SHEET NUMBER
	A3-SIZE	87914	SEE TABLE	GENERAL MARKET	27 OF 45

DOCUMENT NUMBER	DOC TYPE	DOC PART	REVISION
SD-87914-013	PSD	000	D23

DOCUMENT STATUS	P1	RELEASE DATE	2022/08/11 06:33:58

FORMAT: Met-lega-master-tb-prod-A3
REVISION: E
DATE: 2020/01/14

PART NO FOR TRAY PACKAGING	PART NO. FOR TUBE WITHOUT CAP PACKAGING	PART NO. FOR TUBE WITH CAP PACKAGING	PART NO. FOR TAPE & REEL WITHOUT CAP PACKAGING	PART NO. FOR TAPE & REEL WITH CAP PACKAGING	CKT SIZE	VOID POSITION	PLATING TYPE	DIMENSION				
								A	B	F	M	P
87914-4611	-------	-------	-------	-------	46	-------	1	58.42	55.88	10.92	5.84	2.79
87914-4621	-------	-------	-------	-------	46	-------	1	58.42	55.88	12.25	7.00	2.96
87914-4612	-------	-------	-------	-------	46	-------	2	58.42	55.88	10.92	5.84	2.79
87914-4622	-------	-------	-------	-------	46	-------	2	58.42	55.88	12.25	7.00	2.96
87914-4613	-------	-------	-------	-------	46	-------	3	58.42	55.88	10.92	5.84	2.79
87914-4623	-------	-------	-------	-------	46	-------	3	58.42	55.88	12.25	7.00	2.96
87914-4614	-------	-------	-------	-------	46	-------	4	58.42	55.88	10.92	5.84	2.79
87914-4624	-------	-------	-------	-------	46	-------	4	58.42	55.88	12.25	7.00	2.96
87914-4615	-------	-------	-------	-------	46	-------	5	58.42	55.88	10.92	5.84	2.79
87914-4625	-------	-------	-------	-------	46	-------	5	58.42	55.88	12.25	7.00	2.96
87914-4616	-------	-------	-------	-------	46	-------	6	58.42	55.88	10.92	5.84	2.79
87914-4617	-------	-------	-------	-------	46	-------	6	58.42	55.88	10.92	5.84	2.79
87914-4626	-------	-------	-------	-------	46	-------	6	58.42	55.88	12.25	7.00	2.96
87914-4627	-------	-------	-------	-------	46	-------	6	58.42	55.88	12.25	7.00	2.96
87914-4601	-------	-------	-------	-------	46	-------	4	58.42	55.88	13.21	8.13	2.79
87914-4602	-------	-------	-------	-------	46	-------	5	58.42	55.88	13.21	8.13	2.79
87914-4603	-------	-------	-------	-------	46	-------	6	58.42	55.88	13.21	8.13	2.79
87914-4604	-------	-------	-------	-------	46	-------	4	58.42	55.88	11.11	6.10	2.72
87914-4605	-------	-------	-------	-------	46	-------	5	58.42	55.88	11.11	6.10	2.72
87914-4606	-------	-------	-------	-------	46	-------	6	58.42	55.88	11.11	6.10	2.72
87914-4607	-------	-------	-------	-------	46	-------	6	58.42	55.88	11.11	6.10	2.72

THIS DRAWING CONTAINS INFORMATION THAT IS PROPRIETARY TO MOLEX ELECTRONIC TECHNOLOGIES, LLC AND SHOULD NOT BE USED WITHOUT WRITTEN PERMISSION

DIMENSION UNITS	SCALE
mm	NTS

GENERAL TOLERANCES (UNLESS SPECIFIED)

	MM	INCH
4 PLACES	±	±
3 PLACES	±	±
2 PLACES	± 0.2	±
1 PLACE	±	±
0 PLACES	±	±
ANGULAR TOL	± 3.0 °	

DRAFT WHERE APPLICABLE MUST REMAIN WITHIN DIMENSIONS

CURRENT REV DESC:

EC NO: 717430
DRWN: DANUSA 2022/06/28
CHK'D: DANUSA 2022/08/11
APPR: MRAMAKRISHNA 2022/08/11

INITIAL REVISION:
DRWN: YLQIAO 2005/01/17
APPR: SCLOW 2005/01/25

molex

2.54MM PITCH
DUAL ROW HEADER SINGLE WAFER, T/H

PRODUCT CUSTOMER DRAWING

THIRD ANGLE PROJECTION	DRAWING	SERIES	MATERIAL NUMBER	CUSTOMER	SHEET NUMBER
	A3-SIZE	87914	SEE TABLE	GENERAL MARKET	28 OF 45

DOCUMENT NUMBER	DOC TYPE	DOC PART	REVISION
SD-87914-013	PSD	000	D23

DOCUMENT STATUS	P1	RELEASE DATE	2022/08/11 06:33:58

FORMAT: Met-lega-master-tb-prod-A3
REVISION: E
DATE: 2020/01/14

PART NO FOR TRAY PACKAGING	PART NO. FOR TUBE WITHOUT CAP PACKAGING	PART NO. FOR TUBE WITH CAP PACKAGING	PART NO. FOR TAPE & REEL WITHOUT CAP PACKAGING	PART NO. FOR TAPE & REEL WITH CAP PACKAGING	CKT SIZE	VOID POSITION	PLATING TYPE	DIMENSION				
								A	B	F	M	P
87914-4811	-------	-------	-------	-------	48	-------	1	60.96	58.42	10.92	5.84	2.79
87914-4821	-------	-------	-------	-------	48	-------	1	60.96	58.42	12.25	7.00	2.96
87914-4812	-------	-------	-------	-------	48	-------	2	60.96	58.42	10.92	5.84	2.79
87914-4822	-------	-------	-------	-------	48	-------	2	60.96	58.42	12.25	7.00	2.96
87914-4813	-------	-------	-------	-------	48	-------	3	60.96	58.42	10.92	5.84	2.79
87914-4823	-------	-------	-------	-------	48	-------	3	60.96	58.42	12.25	7.00	2.96
87914-4814	-------	-------	-------	-------	48	-------	4	60.96	58.42	10.92	5.84	2.79
87914-4824	-------	-------	-------	-------	48	-------	4	60.96	58.42	12.25	7.00	2.96
87914-4815	-------	-------	-------	-------	48	-------	5	60.96	58.42	10.92	5.84	2.79
87914-4825	-------	-------	-------	-------	48	-------	5	60.96	58.42	12.25	7.00	2.96
87914-4816	-------	-------	-------	-------	48	-------	6	60.96	58.42	10.92	5.84	2.79
87914-4817	-------	-------	-------	-------	48	-------	6	60.96	58.42	10.92	5.84	2.79
87914-4826	-------	-------	-------	-------	48	-------	6	60.96	58.42	12.25	7.00	2.96
87914-4827	-------	-------	-------	-------	48	-------	6	60.96	58.42	12.25	7.00	2.96
87914-4801	-------	-------	-------	-------	48	-------	4	60.96	58.42	13.21	8.13	2.79
87914-4802	-------	-------	-------	-------	48	-------	5	60.96	58.42	13.21	8.13	2.79
87914-4803	-------	-------	-------	-------	48	-------	6	60.96	58.42	13.21	8.13	2.79
87914-4804	-------	-------	-------	-------	48	-------	4	60.96	58.42	11.11	6.10	2.72
87914-4805	-------	-------	-------	-------	48	-------	5	60.96	58.42	11.11	6.10	2.72
87914-4806	-------	-------	-------	-------	48	-------	6	60.96	58.42	11.11	6.10	2.72
87914-4807	-------	-------	-------	-------	48	-------	6	60.96	58.42	11.11	6.10	2.72

THIS DRAWING CONTAINS INFORMATION THAT IS PROPRIETARY TO MOLEX ELECTRONIC TECHNOLOGIES, LLC AND SHOULD NOT BE USED WITHOUT WRITTEN PERMISSION

DIMENSION UNITS	SCALE
mm	NTS

GENERAL TOLERANCES (UNLESS SPECIFIED)

	MM	INCH
4 PLACES	±	±
3 PLACES	±	±
2 PLACES	± 0.2	±
1 PLACE	±	±
0 PLACES	±	±
ANGULAR TOL	± 3.0 °	

DRAFT WHERE APPLICABLE MUST REMAIN WITHIN DIMENSIONS

CURRENT REV DESC:

EC NO: 717430
DRWN: DANUSA 2022/06/28
CHK'D: DANUSA 2022/08/11
APPR: MRAMAKRISHNA 2022/08/11

INITIAL REVISION:
DRWN: YLQIAO 2005/01/17
APPR: SCLOW 2005/01/25

molex

2.54MM PITCH
DUAL ROW HEADER SINGLE WAFER, T/H

PRODUCT CUSTOMER DRAWING

THIRD ANGLE PROJECTION	DRAWING	SERIES	MATERIAL NUMBER	CUSTOMER	SHEET NUMBER
	A3-SIZE	87914	SEE TABLE	GENERAL MARKET	29 OF 45

DOCUMENT NUMBER	DOC TYPE	DOC PART	REVISION
SD-87914-013	PSD	000	D23

DOCUMENT STATUS	P1	RELEASE DATE	2022/08/11 06:33:58

FORMAT: Met-lega-master-tb-prod-A3
REVISION: E
DATE: 2020/01/14

PART NO FOR TRAY PACKAGING	PART NO. FOR TUBE WITHOUT CAP PACKAGING	PART NO. FOR TUBE WITH CAP PACKAGING	PART NO. FOR TAPE & REEL WITHOUT CAP PACKAGING	PART NO. FOR TAPE & REEL WITH CAP PACKAGING	CKT SIZE	VOID POSITION	PLATING TYPE	DIMENSION				
								A	B	F	M	P
87914-0002	-------	-------	-------	-------	50	-------	8	63.50	60.96	18.54	11.58	4.47
87914-5011	-------	-------	-------	-------	50	-------	1	63.50	60.96	10.92	5.84	2.79
87914-5021	-------	-------	-------	-------	50	-------	1	63.50	60.96	12.25	7.00	2.96
87914-5012	-------	-------	-------	-------	50	-------	2	63.50	60.96	10.92	5.84	2.79
87914-5022	-------	-------	-------	-------	50	-------	2	63.50	60.96	12.25	7.00	2.96
87914-5013	-------	-------	-------	-------	50	-------	3	63.50	60.96	10.92	5.84	2.79
87914-5023	-------	-------	-------	-------	50	-------	3	63.50	60.96	12.25	7.00	2.96
87914-5014	-------	-------	-------	-------	50	-------	4	63.50	60.96	10.92	5.84	2.79
87914-5024	-------	-------	-------	-------	50	-------	4	63.50	60.96	12.25	7.00	2.96
87914-5015	-------	-------	-------	-------	50	-------	5	63.50	60.96	10.92	5.84	2.79
87914-5025	-------	-------	-------	-------	50	-------	5	63.50	60.96	12.25	7.00	2.96
87914-5016	-------	-------	-------	-------	50	-------	6	63.50	60.96	10.92	5.84	2.79
87914-5017	-------	-------	-------	-------	50	-------	6	63.50	60.96	10.92	5.84	2.79
87914-5026	-------	-------	-------	-------	50	-------	6	63.50	60.96	12.25	7.00	2.96
87914-5027	-------	-------	-------	-------	50	-------	6	63.50	60.96	12.25	7.00	2.96
87914-5001	-------	-------	-------	-------	50	-------	4	63.50	60.96	13.21	8.13	2.79
87914-5002	-------	-------	-------	-------	50	-------	5	63.50	60.96	13.21	8.13	2.79
87914-5003	-------	-------	-------	-------	50	-------	6	63.50	60.96	13.21	8.13	2.79
87914-5004	-------	-------	-------	-------	50	-------	4	63.50	60.96	11.11	6.10	2.72
87914-5005	-------	-------	-------	-------	50	-------	5	63.50	60.96	11.11	6.10	2.72
87914-5006	-------	-------	-------	-------	50	-------	6	63.50	60.96	11.11	6.10	2.72
87914-5007	-------	-------	-------	-------	50	-------	6	63.50	60.96	11.11	6.10	2.72

THIS DRAWING CONTAINS INFORMATION THAT IS PROPRIETARY TO MOLEX ELECTRONIC TECHNOLOGIES, LLC AND SHOULD NOT BE USED WITHOUT WRITTEN PERMISSION

DIMENSION UNITS	SCALE
mm	NTS

GENERAL TOLERANCES (UNLESS SPECIFIED)

	MM	INCH
4 PLACES	±	±
3 PLACES	±	±
2 PLACES	± 0.2	±
1 PLACE	±	±
0 PLACES	±	±
ANGULAR TOL	± 3.0 °	

DRAFT WHERE APPLICABLE MUST REMAIN WITHIN DIMENSIONS

CURRENT REV DESC:

EC NO: 717430
DRWN: DANUSA 2022/06/28
CHK'D: DANUSA 2022/08/11
APPR: MRAMAKRISHNA 2022/08/11

INITIAL REVISION:
DRWN: YLQIAO 2005/01/17
APPR: SCLOW 2005/01/25

molex

2.54MM PITCH
DUAL ROW HEADER SINGLE WAFER, T/H

PRODUCT CUSTOMER DRAWING

THIRD ANGLE PROJECTION	DRAWING	SERIES	MATERIAL NUMBER	CUSTOMER	SHEET NUMBER
	A3-SIZE	87914	SEE TABLE	GENERAL MARKET	30 OF 45

DOCUMENT NUMBER	DOC TYPE	DOC PART	REVISION
SD-87914-013	PSD	000	D23

DOCUMENT STATUS	P1	RELEASE DATE	2022/08/11 06:33:58

FORMAT: Met-lega-master-tb-prod-A3
REVISION: E
DATE: 2020/01/14

PART NO FOR BULK PACKAGING	PART NO FOR BULK PACKAGING	PART NO. FOR TUBE WITHOUT CAP PACKAGING	PART NO. FOR TUBE WITH CAP PACKAGING	PART NO. FOR TAPE & REEL WITHOUT CAP PACKAGING	PART NO. FOR TAPE & REEL WITH CAP PACKAGING	CKT SIZE	VOID POSITION	PLATING TYPE	DIMENSION				
									A	B	F	M	P
87914-5211	-------	-------	-------	-------	-------	52	-------	1	66.04	63.50	10.92	5.84	2.79
87914-5221	-------	-------	-------	-------	-------	52	-------	1	66.04	63.50	12.25	7.00	2.96
87914-5212	-------	-------	-------	-------	-------	52	-------	2	66.04	63.50	10.92	5.84	2.79
87914-5222	-------	-------	-------	-------	-------	52	-------	2	66.04	63.50	12.25	7.00	2.96
87914-5213	-------	-------	-------	-------	-------	52	-------	3	66.04	63.50	10.92	5.84	2.79
87914-5223	-------	-------	-------	-------	-------	52	-------	3	66.04	63.50	12.25	7.00	2.96
87914-5214	-------	-------	-------	-------	-------	52	-------	4	66.04	63.50	10.92	5.84	2.79
87914-5224	-------	-------	-------	-------	-------	52	-------	4	66.04	63.50	12.25	7.00	2.96
87914-5215	-------	-------	-------	-------	-------	52	-------	5	66.04	63.50	10.92	5.84	2.79
87914-5225	-------	-------	-------	-------	-------	52	-------	5	66.04	63.50	12.25	7.00	2.96
87914-5216	-------	-------	-------	-------	-------	52	-------	6	66.04	63.50	10.92	5.84	2.79
87914-5226	-------	-------	-------	-------	-------	52	-------	6	66.04	63.50	12.25	7.00	2.96
87914-5227	-------	-------	-------	-------	-------	52	-------	6	66.04	63.50	12.25	7.00	2.96
-------	87914-5201	-------	-------	-------	-------	52	-------	4	66.04	63.50	13.21	8.13	2.79
-------	87914-5202	-------	-------	-------	-------	52	-------	5	66.04	63.50	13.21	8.13	2.79
-------	87914-5203	-------	-------	-------	-------	52	-------	6	66.04	63.50	13.21	8.13	2.79
-------	87914-5204	-------	-------	-------	-------	52	-------	4	66.04	63.50	11.11	6.10	2.72
-------	87914-5205	-------	-------	-------	-------	52	-------	5	66.04	63.50	11.11	6.10	2.72
-------	87914-5206	-------	-------	-------	-------	52	-------	6	66.04	63.50	11.11	6.10	2.72
-------	87914-5207	-------	-------	-------	-------	52	-------	6	66.04	63.50	11.11	6.10	2.72

THIS DRAWING CONTAINS INFORMATION THAT IS PROPRIETARY TO MOLEX ELECTRONIC TECHNOLOGIES, LLC AND SHOULD NOT BE USED WITHOUT WRITTEN PERMISSION

DIMENSION UNITS	SCALE
mm	NTS

GENERAL TOLERANCES (UNLESS SPECIFIED)

	MM	INCH
4 PLACES	±	±
3 PLACES	±	±
2 PLACES	± 0.2	±
1 PLACE	±	±
0 PLACES	±	±
ANGULAR TOL	± 3.0 °	

DRAFT WHERE APPLICABLE MUST REMAIN WITHIN DIMENSIONS

CURRENT REV DESC:

EC NO: 717430
DRWN: DANUSA 2022/06/28
CHK'D: DANUSA 2022/08/11
APPR: MRAMAKRISHNA 2022/08/11

INITIAL REVISION:
DRWN: YLQIAO 2005/01/17
APPR: SCLOW 2005/01/25

molex

2.54MM PITCH
DUAL ROW HEADER SINGLE WAFER, T/H

PRODUCT CUSTOMER DRAWING

THIRD ANGLE PROJECTION	DRAWING	SERIES	MATERIAL NUMBER	CUSTOMER	SHEET NUMBER
	A3-SIZE	87914	SEE TABLE	GENERAL MARKET	31 OF 45

DOCUMENT NUMBER	DOC TYPE	DOC PART	REVISION
SD-87914-013	PSD	000	D23

DOCUMENT STATUS	P1	RELEASE DATE	2022/08/11 06:33:58

FORMAT: Met-lega-master-tb-prod-A3
REVISION: E
DATE: 2020/01/14

PART NO FOR BULK PACKAGING	PART NO FOR BULK PACKAGING	PART NO. FOR TUBE WITHOUT CAP PACKAGING	PART NO. FOR TUBE WITH CAP PACKAGING	PART NO. FOR TAPE & REEL WITHOUT CAP PACKAGING	PART NO. FOR TAPE & REEL WITH CAP PACKAGING	CKT SIZE	VOID POSITION	PLATING TYPE	DIMENSION				
									A	B	F	M	P
87914-5411	-------	-------	-------	-------	-------	54	-------	1	68.58	66.04	10.92	5.84	2.79
87914-5421	-------	-------	-------	-------	-------	54	-------	1	68.58	66.04	12.25	7.00	2.96
87914-5412	-------	-------	-------	-------	-------	54	-------	2	68.58	66.04	10.92	5.84	2.79
87914-5422	-------	-------	-------	-------	-------	54	-------	2	68.58	66.04	12.25	7.00	2.96
87914-5413	-------	-------	-------	-------	-------	54	-------	3	68.58	66.04	10.92	5.84	2.79
87914-5423	-------	-------	-------	-------	-------	54	-------	3	68.58	66.04	12.25	7.00	2.96
87914-5414	-------	-------	-------	-------	-------	54	-------	4	68.58	66.04	10.92	5.84	2.79
87914-5424	-------	-------	-------	-------	-------	54	-------	4	68.58	66.04	12.25	7.00	2.96
87914-5415	-------	-------	-------	-------	-------	54	-------	5	68.58	66.04	10.92	5.84	2.79
87914-5425	-------	-------	-------	-------	-------	54	-------	5	68.58	66.04	12.25	7.00	2.96
87914-5416	-------	-------	-------	-------	-------	54	-------	6	68.58	66.04	10.92	5.84	2.79
87914-5426	-------	-------	-------	-------	-------	54	-------	6	68.58	66.04	12.25	7.00	2.96
87914-5427	-------	-------	-------	-------	-------	54	-------	6	68.58	66.04	12.25	7.00	2.96
-------	87914-5401	-------	-------	-------	-------	54	-------	4	68.58	66.04	13.21	8.13	2.79
-------	87914-5402	-------	-------	-------	-------	54	-------	5	68.58	66.04	13.21	8.13	2.79
-------	87914-5403	-------	-------	-------	-------	54	-------	6	68.58	66.04	13.21	8.13	2.79
-------	87914-5404	-------	-------	-------	-------	54	-------	4	68.58	66.04	11.11	6.10	2.72
-------	87914-5405	-------	-------	-------	-------	54	-------	5	68.58	66.04	11.11	6.10	2.72
-------	87914-5406	-------	-------	-------	-------	54	-------	6	68.58	66.04	11.11	6.10	2.72
-------	87914-5407	-------	-------	-------	-------	54	-------	6	68.58	66.04	11.11	6.10	2.72

THIS DRAWING CONTAINS INFORMATION THAT IS PROPRIETARY TO MOLEX ELECTRONIC TECHNOLOGIES, LLC AND SHOULD NOT BE USED WITHOUT WRITTEN PERMISSION

DIMENSION UNITS	SCALE
mm	NTS

GENERAL TOLERANCES (UNLESS SPECIFIED)

	MM	INCH
4 PLACES	±	±
3 PLACES	±	±
2 PLACES	± 0.2	±
1 PLACE	±	±
0 PLACES	±	±
ANGULAR TOL	± 3.0 °	

DRAFT WHERE APPLICABLE MUST REMAIN WITHIN DIMENSIONS

CURRENT REV DESC:

EC NO: 717430
DRWN: DANUSA 2022/06/28
CHK'D: DANUSA 2022/08/11
APPR: MRAMAKRISHNA 2022/08/11

INITIAL REVISION:
DRWN: YLQIAO 2005/01/17
APPR: SCLOW 2005/01/25

molex

2.54MM PITCH
DUAL ROW HEADER SINGLE WAFER, T/H

PRODUCT CUSTOMER DRAWING

THIRD ANGLE PROJECTION	DRAWING	SERIES	MATERIAL NUMBER	CUSTOMER	SHEET NUMBER
	A3-SIZE	87914	SEE TABLE	GENERAL MARKET	32 OF 45

DOCUMENT NUMBER	DOC TYPE	DOC PART	REVISION
SD-87914-013	PSD	000	D23

DOCUMENT STATUS	P1	RELEASE DATE	2022/08/11 06:33:58

FORMAT: Met-lega-master-tb-prod-A3
REVISION: E
DATE: 2020/01/14

PART NO FOR BULK PACKAGING	PART NO FOR BULK PACKAGING	PART NO. FOR TUBE WITHOUT CAP PACKAGING	PART NO. FOR TUBE WITH CAP PACKAGING	PART NO. FOR TAPE & REEL WITHOUT CAP PACKAGING	PART NO. FOR TAPE & REEL WITH CAP PACKAGING	CKT SIZE	VOID POSITION	PLATING TYPE	DIMENSION				
									A	B	F	M	P
87914-5611	-------	-------	-------	-------	-------	56	-------	1	71.12	68.58	10.92	5.84	2.79
87914-5621	-------	-------	-------	-------	-------	56	-------	1	71.12	68.58	12.25	7.00	2.96
87914-5612	-------	-------	-------	-------	-------	56	-------	2	71.12	68.58	10.92	5.84	2.79
87914-5622	-------	-------	-------	-------	-------	56	-------	2	71.12	68.58	12.25	7.00	2.96
87914-5613	-------	-------	-------	-------	-------	56	-------	3	71.12	68.58	10.92	5.84	2.79
87914-5623	-------	-------	-------	-------	-------	56	-------	3	71.12	68.58	12.25	7.00	2.96
87914-5614	-------	-------	-------	-------	-------	56	-------	4	71.12	68.58	10.92	5.84	2.79
87914-5624	-------	-------	-------	-------	-------	56	-------	4	71.12	68.58	12.25	7.00	2.96
87914-5615	-------	-------	-------	-------	-------	56	-------	5	71.12	68.58	10.92	5.84	2.79
87914-5625	-------	-------	-------	-------	-------	56	-------	5	71.12	68.58	12.25	7.00	2.96
87914-5616	-------	-------	-------	-------	-------	56	-------	6	71.12	68.58	10.92	5.84	2.79
87914-5626	-------	-------	-------	-------	-------	56	-------	6	71.12	68.58	12.25	7.00	2.96
87914-5627	-------	-------	-------	-------	-------	56	-------	6	71.12	68.58	12.25	7.00	2.96
-------	87914-5601	-------	-------	-------	-------	56	-------	4	71.12	68.58	13.21	8.13	2.79
-------	87914-5602	-------	-------	-------	-------	56	-------	5	71.12	68.58	13.21	8.13	2.79
-------	87914-5603	-------	-------	-------	-------	56	-------	6	71.12	68.58	13.21	8.13	2.79
-------	87914-5604	-------	-------	-------	-------	56	-------	4	71.12	68.58	11.11	6.10	2.72
-------	87914-5605	-------	-------	-------	-------	56	-------	5	71.12	68.58	11.11	6.10	2.72
-------	87914-5606	-------	-------	-------	-------	56	-------	6	71.12	68.58	11.11	6.10	2.72
-------	87914-5607	-------	-------	-------	-------	56	-------	6	71.12	68.58	11.11	6.10	2.72

THIS DRAWING CONTAINS INFORMATION THAT IS PROPRIETARY TO MOLEX ELECTRONIC TECHNOLOGIES, LLC AND SHOULD NOT BE USED WITHOUT WRITTEN PERMISSION

DIMENSION UNITS	SCALE
mm	NTS

GENERAL TOLERANCES (UNLESS SPECIFIED)

	MM	INCH
4 PLACES	±	±
3 PLACES	±	±
2 PLACES	± 0.2	±
1 PLACE	±	±
0 PLACES	±	±
ANGULAR TOL	± 3.0 °	

DRAFT WHERE APPLICABLE MUST REMAIN WITHIN DIMENSIONS

CURRENT REV DESC:

EC NO: 717430
DRWN: DANUSA 2022/06/28
CHK'D: DANUSA 2022/08/11
APPR: MRAMAKRISHNA 2022/08/11

INITIAL REVISION:
DRWN: YLQIAO 2005/01/17
APPR: SCLOW 2005/01/25

molex

2.54MM PITCH
DUAL ROW HEADER SINGLE WAFER, T/H

PRODUCT CUSTOMER DRAWING

THIRD ANGLE PROJECTION	DRAWING	SERIES	MATERIAL NUMBER	CUSTOMER	SHEET NUMBER
	A3-SIZE	87914	SEE TABLE	GENERAL MARKET	33 OF 45

DOCUMENT NUMBER	DOC TYPE	DOC PART	REVISION
SD-87914-013	PSD	000	D23

DOCUMENT STATUS	P1	RELEASE DATE	2022/08/11 06:33:58

FORMAT: Met-lega-master-tb-prod-A3
REVISION: E
DATE: 2020/01/14

PART NO FOR BULK PACKAGING	PART NO FOR BULK PACKAGING	PART NO. FOR TUBE WITHOUT CAP PACKAGING	PART NO. FOR TUBE WITH CAP PACKAGING	PART NO. FOR TAPE & REEL WITHOUT CAP PACKAGING	PART NO. FOR TAPE & REEL WITH CAP PACKAGING	CKT SIZE	VOID POSITION	PLATING TYPE	DIMENSION				
									A	B	F	M	P
87914-5811	-------	-------	-------	-------	-------	58	-------	1	73.66	71.12	10.92	5.84	2.79
87914-5821	-------	-------	-------	-------	-------	58	-------	1	73.66	71.12	12.25	7.00	2.96
87914-5812	-------	-------	-------	-------	-------	58	-------	2	73.66	71.12	10.92	5.84	2.79
87914-5822	-------	-------	-------	-------	-------	58	-------	2	73.66	71.12	12.25	7.00	2.96
87914-5813	-------	-------	-------	-------	-------	58	-------	3	73.66	71.12	10.92	5.84	2.79
87914-5823	-------	-------	-------	-------	-------	58	-------	3	73.66	71.12	12.25	7.00	2.96
87914-5814	-------	-------	-------	-------	-------	58	-------	4	73.66	71.12	10.92	5.84	2.79
87914-5824	-------	-------	-------	-------	-------	58	-------	4	73.66	71.12	12.25	7.00	2.96
87914-5815	-------	-------	-------	-------	-------	58	-------	5	73.66	71.12	10.92	5.84	2.79
87914-5825	-------	-------	-------	-------	-------	58	-------	5	73.66	71.12	12.25	7.00	2.96
87914-5816	-------	-------	-------	-------	-------	58	-------	6	73.66	71.12	10.92	5.84	2.79
87914-5826	-------	-------	-------	-------	-------	58	-------	6	73.66	71.12	12.25	7.00	2.96
87914-5827	-------	-------	-------	-------	-------	58	-------	6	73.66	71.12	12.25	7.00	2.96
-------	87914-5801	-------	-------	-------	-------	58	-------	4	73.66	71.12	13.21	8.13	2.79
-------	87914-5802	-------	-------	-------	-------	58	-------	5	73.66	71.12	13.21	8.13	2.79
-------	87914-5803	-------	-------	-------	-------	58	-------	6	73.66	71.12	13.21	8.13	2.79
-------	87914-5804	-------	-------	-------	-------	58	-------	4	73.66	71.12	11.11	6.10	2.72
-------	87914-5805	-------	-------	-------	-------	58	-------	5	73.66	71.12	11.11	6.10	2.72
-------	87914-5806	-------	-------	-------	-------	58	-------	6	73.66	71.12	11.11	6.10	2.72
-------	87914-5807	-------	-------	-------	-------	58	-------	6	73.66	71.12	11.11	6.10	2.72

THIS DRAWING CONTAINS INFORMATION THAT IS PROPRIETARY TO MOLEX ELECTRONIC TECHNOLOGIES, LLC AND SHOULD NOT BE USED WITHOUT WRITTEN PERMISSION

DIMENSION UNITS	SCALE
mm	NTS

GENERAL TOLERANCES (UNLESS SPECIFIED)

	MM	INCH
4 PLACES	±	±
3 PLACES	±	±
2 PLACES	± 0.2	±
1 PLACE	±	±
0 PLACES	±	±
ANGULAR TOL	± 3.0 °	

DRAFT WHERE APPLICABLE MUST REMAIN WITHIN DIMENSIONS

CURRENT REV DESC:

EC NO: 717430
DRWN: DANUSA 2022/06/28
CHK'D: DANUSA 2022/08/11
APPR: MRAMAKRISHNA 2022/08/11

INITIAL REVISION:
DRWN: YLQIAO 2005/01/17
APPR: SCLOW 2005/01/25

THIRD ANGLE PROJECTION | DRAWING: A3-SIZE | SERIES: 87914

molex

2.54MM PITCH
DUAL ROW HEADER SINGLE WAFER, T/H

PRODUCT CUSTOMER DRAWING

DOCUMENT NUMBER	DOC TYPE	DOC PART	REVISION
SD-87914-013	PSD	000	D23

MATERIAL NUMBER	CUSTOMER	SHEET NUMBER
SEE TABLE	GENERAL MARKET	34 OF 45

DOCUMENT STATUS	P1	RELEASE DATE	2022/08/11 06:33:58

FORMAT: Met-lega-master-tb-prod-A3
REVISION: E
DATE: 2020/01/14

PART NO FOR BULK PACKAGING	PART NO FOR BULK PACKAGING	PART NO. FOR TUBE WITHOUT CAP PACKAGING	PART NO. FOR TUBE WITH CAP PACKAGING	PART NO. FOR TAPE & REEL WITHOUT CAP PACKAGING	PART NO. FOR TAPE & REEL WITH CAP PACKAGING	CKT SIZE	VOID POSITION	PLATING TYPE	DIMENSION				
									A	B	F	M	P
87914-6011	-------	-------	-------	-------	-------	60	-------	1	76.20	73.66	10.92	5.84	2.79
87914-6021	-------	-------	-------	-------	-------	60	-------	1	76.20	73.66	12.25	7.00	2.96
87914-6012	-------	-------	-------	-------	-------	60	-------	2	76.20	73.66	10.92	5.84	2.79
87914-6022	-------	-------	-------	-------	-------	60	-------	2	76.20	73.66	12.25	7.00	2.96
87914-6013	-------	-------	-------	-------	-------	60	-------	3	76.20	73.66	10.92	5.84	2.79
87914-6023	-------	-------	-------	-------	-------	60	-------	3	76.20	73.66	12.25	7.00	2.96
87914-6014	-------	-------	-------	-------	-------	60	-------	4	76.20	73.66	10.92	5.84	2.79
87914-6024	-------	-------	-------	-------	-------	60	-------	4	76.20	73.66	12.25	7.00	2.96
87914-6015	-------	-------	-------	-------	-------	60	-------	5	76.20	73.66	10.92	5.84	2.79
87914-6025	-------	-------	-------	-------	-------	60	-------	5	76.20	73.66	12.25	7.00	2.96
87914-6016	-------	-------	-------	-------	-------	60	-------	6	76.20	73.66	10.92	5.84	2.79
87914-6026	-------	-------	-------	-------	-------	60	-------	6	76.20	73.66	12.25	7.00	2.96
87914-6027	-------	-------	-------	-------	-------	60	-------	6	76.20	73.66	12.25	7.00	2.96
-------	87914-6001	-------	-------	-------	-------	60	-------	4	76.20	73.66	13.21	8.13	2.79
-------	87914-6002	-------	-------	-------	-------	60	-------	5	76.20	73.66	13.21	8.13	2.79
-------	87914-6003	-------	-------	-------	-------	60	-------	6	76.20	73.66	13.21	8.13	2.79
-------	87914-6004	-------	-------	-------	-------	60	-------	4	76.20	73.66	11.11	6.10	2.72
-------	87914-6005	-------	-------	-------	-------	60	-------	5	76.20	73.66	11.11	6.10	2.72
-------	87914-6006	-------	-------	-------	-------	60	-------	6	76.20	73.66	11.11	6.10	2.72
-------	87914-6007	-------	-------	-------	-------	60	-------	6	76.20	73.66	11.11	6.10	2.72

THIS DRAWING CONTAINS INFORMATION THAT IS PROPRIETARY TO MOLEX ELECTRONIC TECHNOLOGIES, LLC AND SHOULD NOT BE USED WITHOUT WRITTEN PERMISSION

DIMENSION UNITS	SCALE
mm	NTS

GENERAL TOLERANCES (UNLESS SPECIFIED)

	MM	INCH
4 PLACES	±	±
3 PLACES	±	±
2 PLACES	± 0.2	±
1 PLACE	±	±
0 PLACES	±	±
ANGULAR TOL	± 3.0 °	

DRAFT WHERE APPLICABLE MUST REMAIN WITHIN DIMENSIONS

CURRENT REV DESC:

EC NO: 717430
DRWN: DANUSA 2022/06/28
CHK'D: DANUSA 2022/08/11
APPR: MRAMAKRISHNA 2022/08/11

INITIAL REVISION:
DRWN: YLQIAO 2005/01/17
APPR: SCLOW 2005/01/25

molex

2.54MM PITCH
DUAL ROW HEADER SINGLE WAFER, T/H

PRODUCT CUSTOMER DRAWING

THIRD ANGLE PROJECTION	DRAWING	SERIES	MATERIAL NUMBER	CUSTOMER	SHEET NUMBER
	A3-SIZE	87914	SEE TABLE	GENERAL MARKET	35 OF 45

DOCUMENT NUMBER	DOC TYPE	DOC PART	REVISION
SD-87914-013	PSD	000	D23

DOCUMENT STATUS	P1	RELEASE DATE	2022/08/11 06:33:58

FORMAT: Met-lega-master-tb-prod-A3
REVISION: E
DATE: 2020/01/14

PART NO FOR BULK PACKAGING	PART NO FOR BULK PACKAGING	PART NO. FOR TUBE WITHOUT CAP PACKAGING	PART NO. FOR TUBE WITH CAP PACKAGING	PART NO. FOR TAPE & REEL WITHOUT CAP PACKAGING	PART NO. FOR TAPE & REEL WITH CAP PACKAGING	CKT SIZE	VOID POSITION	PLATING TYPE	DIMENSION				
									A	B	F	M	P
87914-6211	-------	-------	-------	-------	-------	62	-------	1	78.74	76.20	10.92	5.84	2.79
87914-6221	-------	-------	-------	-------	-------	62	-------	1	78.74	76.20	12.25	7.00	2.96
87914-6212	-------	-------	-------	-------	-------	62	-------	2	78.74	76.20	10.92	5.84	2.79
87914-6222	-------	-------	-------	-------	-------	62	-------	2	78.74	76.20	12.25	7.00	2.96
87914-6213	-------	-------	-------	-------	-------	62	-------	3	78.74	76.20	10.92	5.84	2.79
87914-6223	-------	-------	-------	-------	-------	62	-------	3	78.74	76.20	12.25	7.00	2.96
87914-6214	-------	-------	-------	-------	-------	62	-------	4	78.74	76.20	10.92	5.84	2.79
87914-6224	-------	-------	-------	-------	-------	62	-------	4	78.74	76.20	12.25	7.00	2.96
87914-6215	-------	-------	-------	-------	-------	62	-------	5	78.74	76.20	10.92	5.84	2.79
87914-6225	-------	-------	-------	-------	-------	62	-------	5	78.74	76.20	12.25	7.00	2.96
87914-6216	-------	-------	-------	-------	-------	62	-------	6	78.74	76.20	10.92	5.84	2.79
87914-6226	-------	-------	-------	-------	-------	62	-------	6	78.74	76.20	12.25	7.00	2.96
87914-6227	-------	-------	-------	-------	-------	62	-------	6	78.74	76.20	12.25	7.00	2.96
-------	87914-6201	-------	-------	-------	-------	62	-------	4	78.74	76.20	13.21	8.13	2.79
-------	87914-6202	-------	-------	-------	-------	62	-------	5	78.74	76.20	13.21	8.13	2.79
-------	87914-6203	-------	-------	-------	-------	62	-------	6	78.74	76.20	13.21	8.13	2.79
-------	87914-6204	-------	-------	-------	-------	62	-------	4	78.74	76.20	11.11	6.10	2.72
-------	87914-6205	-------	-------	-------	-------	62	-------	5	78.74	76.20	11.11	6.10	2.72
-------	87914-6206	-------	-------	-------	-------	62	-------	6	78.74	76.20	11.11	6.10	2.72
-------	87914-6207	-------	-------	-------	-------	62	-------	6	78.74	76.20	11.11	6.10	2.72
-------	-------	87914-6258	-------	-------	-------	62	-------	6	78.74	76.20	13.61	8.60	2.72

D23

THIS DRAWING CONTAINS INFORMATION THAT IS PROPRIETARY TO MOLEX ELECTRONIC TECHNOLOGIES, LLC AND SHOULD NOT BE USED WITHOUT WRITTEN PERMISSION

DIMENSION UNITS	SCALE
mm	NTS

GENERAL TOLERANCES (UNLESS SPECIFIED)

	MM	INCH
4 PLACES	±	±
3 PLACES	±	±
2 PLACES	± 0.2	±
1 PLACE	±	±
0 PLACES	±	±
ANGULAR TOL	± 3.0 °	

DRAFT WHERE APPLICABLE MUST REMAIN WITHIN DIMENSIONS

CURRENT REV DESC:

EC NO: 717430
DRWN: DANUSA 2022/06/28
CHK'D: DANUSA 2022/08/11
APPR: MRAMAKRISHNA 2022/08/11

INITIAL REVISION:
DRWN: YLQIAO 2005/01/17
APPR: SCLOW 2005/01/25

molex

2.54MM PITCH
DUAL ROW HEADER SINGLE WAFER, T/H

PRODUCT CUSTOMER DRAWING

DOCUMENT NUMBER	DOC TYPE	DOC PART	REVISION
SD-87914-013	PSD	000	D23

THIRD ANGLE PROJECTION	DRAWING	SERIES	MATERIAL NUMBER	CUSTOMER	SHEET NUMBER
	A3-SIZE	87914	SEE TABLE	GENERAL MARKET	36 OF 45

DOCUMENT STATUS	P1	RELEASE DATE	2022/08/11 06:33:58

PART NO FOR BULK PACKAGING	PART NO FOR BULK PACKAGING	PART NO. FOR TUBE WITHOUT CAP PACKAGING	PART NO. FOR TUBE WITH CAP PACKAGING	PART NO. FOR TAPE & REEL WITHOUT CAP PACKAGING	PART NO. FOR TAPE & REEL WITH CAP PACKAGING	CKT SIZE	VOID POSITION	PLATING TYPE	DIMENSION				
									A	B	F	M	P
87914-6411	-------	-------	-------	-------	-------	64	-------	1	81.28	78.74	10.92	5.84	2.79
87914-6421	-------	-------	-------	-------	-------	64	-------	1	81.28	78.74	12.25	7.00	2.96
87914-6412	-------	-------	-------	-------	-------	64	-------	2	81.28	78.74	10.92	5.84	2.79
87914-6422	-------	-------	-------	-------	-------	64	-------	2	81.28	78.74	12.25	7.00	2.96
87914-6413	-------	-------	-------	-------	-------	64	-------	3	81.28	78.74	10.92	5.84	2.79
87914-6423	-------	-------	-------	-------	-------	64	-------	3	81.28	78.74	12.25	7.00	2.96
87914-6414	-------	-------	-------	-------	-------	64	-------	4	81.28	78.74	10.92	5.84	2.79
87914-6424	-------	-------	-------	-------	-------	64	-------	4	81.28	78.74	12.25	7.00	2.96
87914-6415	-------	-------	-------	-------	-------	64	-------	5	81.28	78.74	10.92	5.84	2.79
87914-6425	-------	-------	-------	-------	-------	64	-------	5	81.28	78.74	12.25	7.00	2.96
87914-6416	-------	-------	-------	-------	-------	64	-------	6	81.28	78.74	10.92	5.84	2.79
87914-6426	-------	-------	-------	-------	-------	64	-------	6	81.28	78.74	12.25	7.00	2.96
87914-6427	-------	-------	-------	-------	-------	64	-------	6	81.28	78.74	12.25	7.00	2.96
-------	87914-6401	-------	-------	-------	-------	64	-------	4	81.28	78.74	13.21	8.13	2.79
-------	87914-6402	-------	-------	-------	-------	64	-------	5	81.28	78.74	13.21	8.13	2.79
-------	87914-6403	-------	-------	-------	-------	64	-------	6	81.28	78.74	13.21	8.13	2.79
-------	87914-6404	-------	-------	-------	-------	64	-------	4	81.28	78.74	11.11	6.10	2.72
-------	87914-6405	-------	-------	-------	-------	64	-------	5	81.28	78.74	11.11	6.10	2.72
-------	87914-6406	-------	-------	-------	-------	64	-------	6	81.28	78.74	11.11	6.10	2.72
-------	87914-6407	-------	-------	-------	-------	64	-------	6	81.28	78.74	11.11	6.10	2.72

THIS DRAWING CONTAINS INFORMATION THAT IS PROPRIETARY TO MOLEX ELECTRONIC TECHNOLOGIES, LLC AND SHOULD NOT BE USED WITHOUT WRITTEN PERMISSION

DIMENSION UNITS	SCALE
mm	NTS

GENERAL TOLERANCES (UNLESS SPECIFIED)

	MM	INCH
4 PLACES	±	±
3 PLACES	±	±
2 PLACES	± 0.2	±
1 PLACE	±	±
0 PLACES	±	±
ANGULAR TOL	± 3.0 °	

DRAFT WHERE APPLICABLE MUST REMAIN WITHIN DIMENSIONS

CURRENT REV DESC:

EC NO: 717430
DRWN: DANUSA 2022/06/28
CHK'D: DANUSA 2022/08/11
APPR: MRAMAKRISHNA 2022/08/11

INITIAL REVISION:
DRWN: YLQIAO 2005/01/17
APPR: SCLOW 2005/01/25

molex

2.54MM PITCH
DUAL ROW HEADER SINGLE WAFER, T/H

PRODUCT CUSTOMER DRAWING

THIRD ANGLE PROJECTION	DRAWING	SERIES	MATERIAL NUMBER	CUSTOMER	SHEET NUMBER
	A3-SIZE	87914	SEE TABLE	GENERAL MARKET	37 OF 45

DOCUMENT NUMBER	DOC TYPE	DOC PART	REVISION
SD-87914-013	PSD	000	D23

DOCUMENT STATUS	P1	RELEASE DATE	2022/08/11 06:33:58

FORMAT: Met-lega-master-tb-prod-A3
REVISION: E
DATE: 2020/01/14

PART NO FOR BULK PACKAGING	PART NO FOR BULK PACKAGING	PART NO. FOR TUBE WITHOUT CAP PACKAGING	PART NO. FOR TUBE WITH CAP PACKAGING	PART NO. FOR TAPE & REEL WITHOUT CAP PACKAGING	PART NO. FOR TAPE & REEL WITH CAP PACKAGING	CKT SIZE	VOID POSITION	PLATING TYPE	DIMENSION				
									A	B	F	M	P
87914-6611	-------	-------	-------	-------	-------	66	-------	1	83.82	81.28	10.92	5.84	2.79
87914-6621	-------	-------	-------	-------	-------	66	-------	1	83.82	81.28	12.25	7.00	2.96
87914-6612	-------	-------	-------	-------	-------	66	-------	2	83.82	81.28	10.92	5.84	2.79
87914-6622	-------	-------	-------	-------	-------	66	-------	2	83.82	81.28	12.25	7.00	2.96
87914-6613	-------	-------	-------	-------	-------	66	-------	3	83.82	81.28	10.92	5.84	2.79
87914-6623	-------	-------	-------	-------	-------	66	-------	3	83.82	81.28	12.25	7.00	2.96
87914-6614	-------	-------	-------	-------	-------	66	-------	4	83.82	81.28	10.92	5.84	2.79
87914-6624	-------	-------	-------	-------	-------	66	-------	4	83.82	81.28	12.25	7.00	2.96
87914-6615	-------	-------	-------	-------	-------	66	-------	5	83.82	81.28	10.92	5.84	2.79
87914-6625	-------	-------	-------	-------	-------	66	-------	5	83.82	81.28	12.25	7.00	2.96
87914-6616	-------	-------	-------	-------	-------	66	-------	6	83.82	81.28	10.92	5.84	2.79
87914-6626	-------	-------	-------	-------	-------	66	-------	6	83.82	81.28	12.25	7.00	2.96
87914-6627	-------	-------	-------	-------	-------	66	-------	6	83.82	81.28	12.25	7.00	2.96
-------	87914-6601	-------	-------	-------	-------	66	-------	4	83.82	81.28	13.21	8.13	2.79
-------	87914-6602	-------	-------	-------	-------	66	-------	5	83.82	81.28	13.21	8.13	2.79
-------	87914-6603	-------	-------	-------	-------	66	-------	6	83.82	81.28	13.21	8.13	2.79
-------	87914-6604	-------	-------	-------	-------	66	-------	4	83.82	81.28	11.11	6.10	2.72
-------	87914-6605	-------	-------	-------	-------	66	-------	5	83.82	81.28	11.11	6.10	2.72
-------	87914-6606	-------	-------	-------	-------	66	-------	6	83.82	81.28	11.11	6.10	2.72
-------	87914-6607	-------	-------	-------	-------	66	-------	6	83.82	81.28	11.11	6.10	2.72

THIS DRAWING CONTAINS INFORMATION THAT IS PROPRIETARY TO MOLEX ELECTRONIC TECHNOLOGIES, LLC AND SHOULD NOT BE USED WITHOUT WRITTEN PERMISSION

DIMENSION UNITS	SCALE
mm	NTS

GENERAL TOLERANCES (UNLESS SPECIFIED)

	MM	INCH
4 PLACES	±	±
3 PLACES	±	±
2 PLACES	± 0.2	±
1 PLACE	±	±
0 PLACES	±	±
ANGULAR TOL	± 3.0 °	

DRAFT WHERE APPLICABLE MUST REMAIN WITHIN DIMENSIONS

CURRENT REV DESC:

EC NO: 717430
DRWN: DANUSA 2022/06/28
CHK'D: DANUSA 2022/08/11
APPR: MRAMAKRISHNA 2022/08/11

INITIAL REVISION:
DRWN: YLQIAO 2005/01/17
APPR: SCLOW 2005/01/25

molex

2.54MM PITCH
DUAL ROW HEADER SINGLE WAFER, T/H

PRODUCT CUSTOMER DRAWING

THIRD ANGLE PROJECTION	DRAWING	SERIES	MATERIAL NUMBER	CUSTOMER	SHEET NUMBER
	A3-SIZE	87914	SEE TABLE	GENERAL MARKET	38 OF 45

DOCUMENT NUMBER	DOC TYPE	DOC PART	REVISION
SD-87914-013	PSD	000	D23

DOCUMENT STATUS	P1	RELEASE DATE	2022/08/11 06:33:58

FORMAT: Met-lega-master-tb-prod-A3
REVISION: E
DATE: 2020/01/14

PART NO FOR BULK PACKAGING	PART NO FOR BULK PACKAGING	PART NO. FOR TUBE WITHOUT CAP PACKAGING	PART NO. FOR TUBE WITH CAP PACKAGING	PART NO. FOR TAPE & REEL WITHOUT CAP PACKAGING	PART NO. FOR TAPE & REEL WITH CAP PACKAGING	CKT SIZE	VOID POSITION	PLATING TYPE	DIMENSION				
									A	B	F	M	P
87914-6811	-------	-------	-------	-------	-------	68	-------	1	86.36	83.82	10.92	5.84	2.79
87914-6821	-------	-------	-------	-------	-------	68	-------	1	86.36	83.82	12.25	7.00	2.96
87914-6812	-------	-------	-------	-------	-------	68	-------	2	86.36	83.82	10.92	5.84	2.79
87914-6822	-------	-------	-------	-------	-------	68	-------	2	86.36	83.82	12.25	7.00	2.96
87914-6813	-------	-------	-------	-------	-------	68	-------	3	86.36	83.82	10.92	5.84	2.79
87914-6823	-------	-------	-------	-------	-------	68	-------	3	86.36	83.82	12.25	7.00	2.96
87914-6814	-------	-------	-------	-------	-------	68	-------	4	86.36	83.82	10.92	5.84	2.79
87914-6824	-------	-------	-------	-------	-------	68	-------	4	86.36	83.82	12.25	7.00	2.96
87914-6815	-------	-------	-------	-------	-------	68	-------	5	86.36	83.82	10.92	5.84	2.79
87914-6825	-------	-------	-------	-------	-------	68	-------	5	86.36	83.82	12.25	7.00	2.96
87914-6816	-------	-------	-------	-------	-------	68	-------	6	86.36	83.82	10.92	5.84	2.79
87914-6826	-------	-------	-------	-------	-------	68	-------	6	86.36	83.82	12.25	7.00	2.96
87914-6827	-------	-------	-------	-------	-------	68	-------	6	86.36	83.82	12.25	7.00	2.96
-------	87914-6801	-------	-------	-------	-------	68	-------	4	86.36	83.82	13.21	8.13	2.79
-------	87914-6802	-------	-------	-------	-------	68	-------	5	86.36	83.82	13.21	8.13	2.79
-------	87914-6803	-------	-------	-------	-------	68	-------	6	86.36	83.82	13.21	8.13	2.79
-------	87914-6804	-------	-------	-------	-------	68	-------	4	86.36	83.82	11.11	6.10	2.72
-------	87914-6805	-------	-------	-------	-------	68	-------	5	86.36	83.82	11.11	6.10	2.72
-------	87914-6806	-------	-------	-------	-------	68	-------	6	86.36	83.82	11.11	6.10	2.72
-------	87914-6807	-------	-------	-------	-------	68	-------	6	86.36	83.82	11.11	6.10	2.72

THIS DRAWING CONTAINS INFORMATION THAT IS PROPRIETARY TO MOLEX ELECTRONIC TECHNOLOGIES, LLC AND SHOULD NOT BE USED WITHOUT WRITTEN PERMISSION

DIMENSION UNITS	SCALE
mm	NTS

GENERAL TOLERANCES (UNLESS SPECIFIED)

	MM	INCH
4 PLACES	±	±
3 PLACES	±	±
2 PLACES	± 0.2	±
1 PLACE	±	±
0 PLACES	±	±
ANGULAR TOL	± 3.0 °	

DRAFT WHERE APPLICABLE MUST REMAIN WITHIN DIMENSIONS

CURRENT REV DESC:

EC NO: 717430
DRWN: DANUSA 2022/06/28
CHK'D: DANUSA 2022/08/11
APPR: MRAMAKRISHNA 2022/08/11

INITIAL REVISION:
DRWN: YLQIAO 2005/01/17
APPR: SCLOW 2005/01/25

molex

2.54MM PITCH
DUAL ROW HEADER SINGLE WAFER, T/H

PRODUCT CUSTOMER DRAWING

THIRD ANGLE PROJECTION	DRAWING	SERIES	MATERIAL NUMBER	CUSTOMER	SHEET NUMBER
	A3-SIZE	87914	SEE TABLE	GENERAL MARKET	39 OF 45

DOCUMENT NUMBER	DOC TYPE	DOC PART	REVISION
SD-87914-013	PSD	000	D23

DOCUMENT STATUS	P1	RELEASE DATE	2022/08/11 06:33:58

FORMAT: Met-lega-master-tb-prod-A3
REVISION: E
DATE: 2020/01/14

PART NO FOR BULK PACKAGING	PART NO FOR BULK PACKAGING	PART NO. FOR TUBE WITHOUT CAP PACKAGING	PART NO. FOR TUBE WITH CAP PACKAGING	PART NO. FOR TAPE & REEL WITHOUT CAP PACKAGING	PART NO. FOR TAPE & REEL WITH CAP PACKAGING	CKT SIZE	VOID POSITION	PLATING TYPE	DIMENSION				
									A	B	F	M	P
87914-7011	-------	-------	-------	-------	-------	70	-------	1	88.90	86.36	10.92	5.84	2.79
87914-7021	-------	-------	-------	-------	-------	70	-------	1	88.90	86.36	12.25	7.00	2.96
87914-7012	-------	-------	-------	-------	-------	70	-------	2	88.90	86.36	10.92	5.84	2.79
87914-7022	-------	-------	-------	-------	-------	70	-------	2	88.90	86.36	12.25	7.00	2.96
87914-7013	-------	-------	-------	-------	-------	70	-------	3	88.90	86.36	10.92	5.84	2.79
87914-7023	-------	-------	-------	-------	-------	70	-------	3	88.90	86.36	12.25	7.00	2.96
87914-7014	-------	-------	-------	-------	-------	70	-------	4	88.90	86.36	10.92	5.84	2.79
87914-7024	-------	-------	-------	-------	-------	70	-------	4	88.90	86.36	12.25	7.00	2.96
87914-7015	-------	-------	-------	-------	-------	70	-------	5	88.90	86.36	10.92	5.84	2.79
87914-7025	-------	-------	-------	-------	-------	70	-------	5	88.90	86.36	12.25	7.00	2.96
87914-7016	-------	-------	-------	-------	-------	70	-------	6	88.90	86.36	10.92	5.84	2.79
87914-7026	-------	-------	-------	-------	-------	70	-------	6	88.90	86.36	12.25	7.00	2.96
87914-7027	-------	-------	-------	-------	-------	70	-------	6	88.90	86.36	12.25	7.00	2.96
-------	87914-7001	-------	-------	-------	-------	70	-------	4	88.90	86.36	13.21	8.13	2.79
-------	87914-7002	-------	-------	-------	-------	70	-------	5	88.90	86.36	13.21	8.13	2.79
-------	87914-7003	-------	-------	-------	-------	70	-------	6	88.90	86.36	13.21	8.13	2.79
-------	87914-7004	-------	-------	-------	-------	70	-------	4	88.90	86.36	11.11	6.10	2.72
-------	87914-7005	-------	-------	-------	-------	70	-------	5	88.90	86.36	11.11	6.10	2.72
-------	87914-7006	-------	-------	-------	-------	70	-------	6	88.90	86.36	11.11	6.10	2.72
-------	87914-7007	-------	-------	-------	-------	70	-------	6	88.90	86.36	11.11	6.10	2.72

THIS DRAWING CONTAINS INFORMATION THAT IS PROPRIETARY TO MOLEX ELECTRONIC TECHNOLOGIES, LLC AND SHOULD NOT BE USED WITHOUT WRITTEN PERMISSION

DIMENSION UNITS	SCALE
mm	NTS

GENERAL TOLERANCES (UNLESS SPECIFIED)

	MM	INCH
4 PLACES	±	±
3 PLACES	±	±
2 PLACES	± 0.2	±
1 PLACE	±	±
0 PLACES	±	±
ANGULAR TOL	± 3.0 °	

DRAFT WHERE APPLICABLE MUST REMAIN WITHIN DIMENSIONS

CURRENT REV DESC:

EC NO: 717430
DRWN: DANUSA 2022/06/28
CHK'D: DANUSA 2022/08/11
APPR: MRAMAKRISHNA 2022/08/11

INITIAL REVISION:
DRWN: YLQIAO 2005/01/17
APPR: SCLOW 2005/01/25

molex

2.54MM PITCH
DUAL ROW HEADER SINGLE WAFER, T/H

PRODUCT CUSTOMER DRAWING

DOCUMENT NUMBER	DOC TYPE	DOC PART	REVISION
SD-87914-013	PSD	000	D23

THIRD ANGLE PROJECTION	DRAWING	SERIES	MATERIAL NUMBER	CUSTOMER	SHEET NUMBER
	A3-SIZE	87914	SEE TABLE	GENERAL MARKET	40 OF 45

DOCUMENT STATUS	P1	RELEASE DATE	2022/08/11 06:33:58

FORMAT: Met-lega-master-tb-prod-A3
REVISION: E
DATE: 2020/01/14

PART NO FOR BULK PACKAGING	PART NO FOR BULK PACKAGING	PART NO. FOR TUBE WITHOUT CAP PACKAGING	PART NO. FOR TUBE WITH CAP PACKAGING	PART NO. FOR TAPE & REEL WITHOUT CAP PACKAGING	PART NO. FOR TAPE & REEL WITH CAP PACKAGING	CKT SIZE	VOID POSITION	PLATING TYPE	DIMENSION				
									A	B	F	M	P
87914-7211	-------	-------	-------	-------	-------	72	-------	1	91.44	88.90	10.92	5.84	2.79
87914-7221	-------	-------	-------	-------	-------	72	-------	1	91.44	88.90	12.25	7.00	2.96
87914-7212	-------	-------	-------	-------	-------	72	-------	2	91.44	88.90	10.92	5.84	2.79
87914-7222	-------	-------	-------	-------	-------	72	-------	2	91.44	88.90	12.25	7.00	2.96
87914-7213	-------	-------	-------	-------	-------	72	-------	3	91.44	88.90	10.92	5.84	2.79
87914-7223	-------	-------	-------	-------	-------	72	-------	3	91.44	88.90	12.25	7.00	2.96
87914-7214	-------	-------	-------	-------	-------	72	-------	4	91.44	88.90	10.92	5.84	2.79
87914-7224	-------	-------	-------	-------	-------	72	-------	4	91.44	88.90	12.25	7.00	2.96
87914-7215	-------	-------	-------	-------	-------	72	-------	5	91.44	88.90	10.92	5.84	2.79
87914-7225	-------	-------	-------	-------	-------	72	-------	5	91.44	88.90	12.25	7.00	2.96
87914-7216	-------	-------	-------	-------	-------	72	-------	6	91.44	88.90	10.92	5.84	2.79
87914-7226	-------	-------	-------	-------	-------	72	-------	6	91.44	88.90	12.25	7.00	2.96
87914-7227	-------	-------	-------	-------	-------	72	-------	6	91.44	88.90	12.25	7.00	2.96
-------	87914-7201	-------	-------	-------	-------	72	-------	4	91.44	88.90	13.21	8.13	2.79
-------	87914-7202	-------	-------	-------	-------	72	-------	5	91.44	88.90	13.21	8.13	2.79
-------	87914-7203	-------	-------	-------	-------	72	-------	6	91.44	88.90	13.21	8.13	2.79
-------	87914-7204	-------	-------	-------	-------	72	-------	4	91.44	88.90	11.11	6.10	2.72
-------	87914-7205	-------	-------	-------	-------	72	-------	5	91.44	88.90	11.11	6.10	2.72
-------	87914-7206	-------	-------	-------	-------	72	-------	6	91.44	88.90	11.11	6.10	2.72
-------	87914-7207	-------	-------	-------	-------	72	-------	6	91.44	88.90	11.11	6.10	2.72

THIS DRAWING CONTAINS INFORMATION THAT IS PROPRIETARY TO MOLEX ELECTRONIC TECHNOLOGIES, LLC AND SHOULD NOT BE USED WITHOUT WRITTEN PERMISSION

DIMENSION UNITS	SCALE
mm	NTS

GENERAL TOLERANCES (UNLESS SPECIFIED)

	MM	INCH
4 PLACES	±	±
3 PLACES	±	±
2 PLACES	± 0.2	±
1 PLACE	±	±
0 PLACES	±	±
ANGULAR TOL	± 3.0 °	

DRAFT WHERE APPLICABLE MUST REMAIN WITHIN DIMENSIONS

CURRENT REV DESC:

EC NO: 717430
DRWN: DANUSA 2022/06/28
CHK'D: DANUSA 2022/08/11
APPR: MRAMAKRISHNA 2022/08/11

INITIAL REVISION:
DRWN: YLQIAO 2005/01/17
APPR: SCLOW 2005/01/25

THIRD ANGLE PROJECTION | DRAWING: A3-SIZE | SERIES: 87914

molex

2.54MM PITCH
DUAL ROW HEADER SINGLE WAFER, T/H

PRODUCT CUSTOMER DRAWING

DOCUMENT NUMBER	DOC TYPE	DOC PART	REVISION
SD-87914-013	PSD	000	D23

MATERIAL NUMBER	CUSTOMER	SHEET NUMBER
SEE TABLE	GENERAL MARKET	41 OF 45

DOCUMENT STATUS	P1	RELEASE DATE	2022/08/11 06:33:58

FORMAT: Met-lega-master-tb-prod-A3
REVISION: E
DATE: 2020/01/14

PART NO FOR BULK PACKAGING	PART NO FOR BULK PACKAGING	PART NO. FOR TUBE WITHOUT CAP PACKAGING	PART NO. FOR TUBE WITH CAP PACKAGING	PART NO. FOR TAPE & REEL WITHOUT CAP PACKAGING	PART NO. FOR TAPE & REEL WITH CAP PACKAGING	CKT SIZE	VOID POSITION	PLATING TYPE	DIMENSION				
									A	B	F	M	P
87914-7411	-------	-------	-------	-------	-------	74	-------	1	93.98	91.44	10.92	5.84	2.79
87914-7421	-------	-------	-------	-------	-------	74	-------	1	93.98	91.44	12.25	7.00	2.96
87914-7412	-------	-------	-------	-------	-------	74	-------	2	93.98	91.44	10.92	5.84	2.79
87914-7422	-------	-------	-------	-------	-------	74	-------	2	93.98	91.44	12.25	7.00	2.96
87914-7413	-------	-------	-------	-------	-------	74	-------	3	93.98	91.44	10.92	5.84	2.79
87914-7423	-------	-------	-------	-------	-------	74	-------	3	93.98	91.44	12.25	7.00	2.96
87914-7414	-------	-------	-------	-------	-------	74	-------	4	93.98	91.44	10.92	5.84	2.79
87914-7424	-------	-------	-------	-------	-------	74	-------	4	93.98	91.44	12.25	7.00	2.96
87914-7415	-------	-------	-------	-------	-------	74	-------	5	93.98	91.44	10.92	5.84	2.79
87914-7425	-------	-------	-------	-------	-------	74	-------	5	93.98	91.44	12.25	7.00	2.96
87914-7416	-------	-------	-------	-------	-------	74	-------	6	93.98	91.44	10.92	5.84	2.79
87914-7426	-------	-------	-------	-------	-------	74	-------	6	93.98	91.44	12.25	7.00	2.96
87914-7427	-------	-------	-------	-------	-------	74	-------	6	93.98	91.44	12.25	7.00	2.96
-------	87914-7401	-------	-------	-------	-------	74	-------	4	93.98	91.44	13.21	8.13	2.79
-------	87914-7402	-------	-------	-------	-------	74	-------	5	93.98	91.44	13.21	8.13	2.79
-------	87914-7403	-------	-------	-------	-------	74	-------	6	93.98	91.44	13.21	8.13	2.79
-------	87914-7404	-------	-------	-------	-------	74	-------	4	93.98	91.44	11.11	6.10	2.72
-------	87914-7405	-------	-------	-------	-------	74	-------	5	93.98	91.44	11.11	6.10	2.72
-------	87914-7406	-------	-------	-------	-------	74	-------	6	93.98	91.44	11.11	6.10	2.72
-------	87914-7407	-------	-------	-------	-------	74	-------	6	93.98	91.44	11.11	6.10	2.72

THIS DRAWING CONTAINS INFORMATION THAT IS PROPRIETARY TO MOLEX ELECTRONIC TECHNOLOGIES, LLC AND SHOULD NOT BE USED WITHOUT WRITTEN PERMISSION

DIMENSION UNITS	SCALE
mm	NTS

GENERAL TOLERANCES (UNLESS SPECIFIED)

	MM	INCH
4 PLACES	±	±
3 PLACES	±	±
2 PLACES	± 0.2	±
1 PLACE	±	±
0 PLACES	±	±
ANGULAR TOL	± 3.0 °	

DRAFT WHERE APPLICABLE MUST REMAIN WITHIN DIMENSIONS

CURRENT REV DESC:

EC NO: 717430
DRWN: DANUSA 2022/06/28
CHK'D: DANUSA 2022/08/11
APPR: MRAMAKRISHNA 2022/08/11

INITIAL REVISION:
DRWN: YLQIAO 2005/01/17
APPR: SCLOW 2005/01/25

molex

2.54MM PITCH
DUAL ROW HEADER SINGLE WAFER, T/H

PRODUCT CUSTOMER DRAWING

THIRD ANGLE PROJECTION	DRAWING	SERIES	MATERIAL NUMBER	CUSTOMER	SHEET NUMBER
	A3-SIZE	87914	SEE TABLE	GENERAL MARKET	42 OF 45

DOCUMENT NUMBER	DOC TYPE	DOC PART	REVISION
SD-87914-013	PSD	000	D23

DOCUMENT STATUS	P1	RELEASE DATE	2022/08/11 06:33:58

FORMAT: Met-lega-master-tb-prod-A3
REVISION: E
DATE: 2020/01/14

PART NO FOR BULK PACKAGING	PART NO FOR BULK PACKAGING	PART NO. FOR TUBE WITHOUT CAP PACKAGING	PART NO. FOR TUBE WITH CAP PACKAGING	PART NO. FOR TAPE & REEL WITHOUT CAP PACKAGING	PART NO. FOR TAPE & REEL WITH CAP PACKAGING	CKT SIZE	VOID POSITION	PLATING TYPE	DIMENSION				
									A	B	F	M	P
87914-7611	-------	-------	-------	-------	-------	76	-------	1	96.52	93.98	10.92	5.84	2.79
87914-7621	-------	-------	-------	-------	-------	76	-------	1	96.52	93.98	12.25	7.00	2.96
87914-7612	-------	-------	-------	-------	-------	76	-------	2	96.52	93.98	10.92	5.84	2.79
87914-7622	-------	-------	-------	-------	-------	76	-------	2	96.52	93.98	12.25	7.00	2.96
87914-7613	-------	-------	-------	-------	-------	76	-------	3	96.52	93.98	10.92	5.84	2.79
87914-7623	-------	-------	-------	-------	-------	76	-------	3	96.52	93.98	12.25	7.00	2.96
87914-7614	-------	-------	-------	-------	-------	76	-------	4	96.52	93.98	10.92	5.84	2.79
87914-7624	-------	-------	-------	-------	-------	76	-------	4	96.52	93.98	12.25	7.00	2.96
87914-7615	-------	-------	-------	-------	-------	76	-------	5	96.52	93.98	10.92	5.84	2.79
87914-7625	-------	-------	-------	-------	-------	76	-------	5	96.52	93.98	12.25	7.00	2.96
87914-7616	-------	-------	-------	-------	-------	76	-------	6	96.52	93.98	10.92	5.84	2.79
87914-7626	-------	-------	-------	-------	-------	76	-------	6	96.52	93.98	12.25	7.00	2.96
87914-7627	-------	-------	-------	-------	-------	76	-------	6	96.52	93.98	12.25	7.00	2.96
-------	87914-7601	-------	-------	-------	-------	76	-------	4	96.52	93.98	13.21	8.13	2.79
-------	87914-7602	-------	-------	-------	-------	76	-------	5	96.52	93.98	13.21	8.13	2.79
-------	87914-7603	-------	-------	-------	-------	76	-------	6	96.52	93.98	13.21	8.13	2.79
-------	87914-7604	-------	-------	-------	-------	76	-------	4	96.52	93.98	11.11	6.10	2.72
-------	87914-7605	-------	-------	-------	-------	76	-------	5	96.52	93.98	11.11	6.10	2.72
-------	87914-7606	-------	-------	-------	-------	76	-------	6	96.52	93.98	11.11	6.10	2.72
-------	87914-7607	-------	-------	-------	-------	76	-------	6	96.52	93.98	11.11	6.10	2.72

THIS DRAWING CONTAINS INFORMATION THAT IS PROPRIETARY TO MOLEX ELECTRONIC TECHNOLOGIES, LLC AND SHOULD NOT BE USED WITHOUT WRITTEN PERMISSION

DIMENSION UNITS	SCALE
mm	NTS

GENERAL TOLERANCES (UNLESS SPECIFIED)

	MM	INCH
4 PLACES	±	±
3 PLACES	±	±
2 PLACES	± 0.2	±
1 PLACE	±	±
0 PLACES	±	±
ANGULAR TOL	± 3.0 °	

DRAFT WHERE APPLICABLE MUST REMAIN WITHIN DIMENSIONS

CURRENT REV DESC:

EC NO: 717430
DRWN: DANUSA 2022/06/28
CHK'D: DANUSA 2022/08/11
APPR: MRAMAKRISHNA 2022/08/11

INITIAL REVISION:
DRWN: YLQIAO 2005/01/17
APPR: SCLOW 2005/01/25

molex

2.54MM PITCH
DUAL ROW HEADER SINGLE WAFER, T/H

PRODUCT CUSTOMER DRAWING

THIRD ANGLE PROJECTION	DRAWING	SERIES	MATERIAL NUMBER	CUSTOMER	SHEET NUMBER
	A3-SIZE	87914	SEE TABLE	GENERAL MARKET	43 OF 45

DOCUMENT NUMBER	DOC TYPE	DOC PART	REVISION
SD-87914-013	PSD	000	D23

DOCUMENT STATUS	P1	RELEASE DATE	2022/08/11 06:33:58

FORMAT: Met-lega-master-tb-prod-A3
REVISION: E
DATE: 2020/01/14

PART NO FOR BULK PACKAGING	PART NO FOR BULK PACKAGING	PART NO. FOR TUBE WITHOUT CAP PACKAGING	PART NO. FOR TUBE WITH CAP PACKAGING	PART NO. FOR TAPE & REEL WITHOUT CAP PACKAGING	PART NO. FOR TAPE & REEL WITH CAP PACKAGING	CKT SIZE	VOID POSITION	PLATING TYPE	DIMENSION				
									A	B	F	M	P
87914-7811	-------	-------	-------	-------	-------	78	-------	1	99.06	96.52	10.92	5.84	2.79
87914-7821	-------	-------	-------	-------	-------	78	-------	1	99.06	96.52	12.25	7.00	2.96
87914-7812	-------	-------	-------	-------	-------	78	-------	2	99.06	96.52	10.92	5.84	2.79
87914-7822	-------	-------	-------	-------	-------	78	-------	2	99.06	96.52	12.25	7.00	2.96
87914-7813	-------	-------	-------	-------	-------	78	-------	3	99.06	96.52	10.92	5.84	2.79
87914-7823	-------	-------	-------	-------	-------	78	-------	3	99.06	96.52	12.25	7.00	2.96
87914-7814	-------	-------	-------	-------	-------	78	-------	4	99.06	96.52	10.92	5.84	2.79
87914-7824	-------	-------	-------	-------	-------	78	-------	4	99.06	96.52	12.25	7.00	2.96
87914-7815	-------	-------	-------	-------	-------	78	-------	5	99.06	96.52	10.92	5.84	2.79
87914-7825	-------	-------	-------	-------	-------	78	-------	5	99.06	96.52	12.25	7.00	2.96
87914-7816	-------	-------	-------	-------	-------	78	-------	6	99.06	96.52	10.92	5.84	2.79
87914-7826	-------	-------	-------	-------	-------	78	-------	6	99.06	96.52	12.25	7.00	2.96
87914-7827	-------	-------	-------	-------	-------	78	-------	6	99.06	96.52	12.25	7.00	2.96
-------	87914-7801	-------	-------	-------	-------	78	-------	4	99.06	96.52	13.21	8.13	2.79
-------	87914-7802	-------	-------	-------	-------	78	-------	5	99.06	96.52	13.21	8.13	2.79
-------	87914-7803	-------	-------	-------	-------	78	-------	6	99.06	96.52	13.21	8.13	2.79
-------	87914-7804	-------	-------	-------	-------	78	-------	4	99.06	96.52	11.11	6.10	2.72
-------	87914-7805	-------	-------	-------	-------	78	-------	5	99.06	96.52	11.11	6.10	2.72
-------	87914-7806	-------	-------	-------	-------	78	-------	6	99.06	96.52	11.11	6.10	2.72
-------	87914-7807	-------	-------	-------	-------	78	-------	6	99.06	96.52	11.11	6.10	2.72

THIS DRAWING CONTAINS INFORMATION THAT IS PROPRIETARY TO MOLEX ELECTRONIC TECHNOLOGIES, LLC AND SHOULD NOT BE USED WITHOUT WRITTEN PERMISSION

DIMENSION UNITS	SCALE
mm	NTS

GENERAL TOLERANCES (UNLESS SPECIFIED)

	MM	INCH
4 PLACES	±	±
3 PLACES	±	±
2 PLACES	± 0.2	±
1 PLACE	±	±
0 PLACES	±	±
ANGULAR TOL	± 3.0 °	

DRAFT WHERE APPLICABLE MUST REMAIN WITHIN DIMENSIONS

CURRENT REV DESC:

EC NO: 717430
DRWN: DANUSA 2022/06/28
CHK'D: DANUSA 2022/08/11
APPR: MRAMAKRISHNA 2022/08/11

INITIAL REVISION:
DRWN: YLQIAO 2005/01/17
APPR: SCLOW 2005/01/25

molex

2.54MM PITCH
DUAL ROW HEADER SINGLE WAFER, T/H

PRODUCT CUSTOMER DRAWING

THIRD ANGLE PROJECTION	DRAWING	SERIES	MATERIAL NUMBER	CUSTOMER	SHEET NUMBER
	A3-SIZE	87914	SEE TABLE	GENERAL MARKET	44 OF 45

DOCUMENT NUMBER	DOC TYPE	DOC PART	REVISION
SD-87914-013	PSD	000	D23

DOCUMENT STATUS	P1	RELEASE DATE	2022/08/11 06:33:58

FORMAT: Met-lega-master-tb-prod-A3
REVISION: E
DATE: 2020/01/14

PART NO FOR BULK PACKAGING	PART NO FOR BULK PACKAGING	PART NO. FOR TUBE WITHOUT CAP PACKAGING	PART NO. FOR TUBE WITH CAP PACKAGING	PART NO. FOR TAPE & REEL WITHOUT CAP PACKAGING	PART NO. FOR TAPE & REEL WITH CAP PACKAGING	CKT SIZE	VOID POSITION	PLATING TYPE	DIMENSION				
									A	B	F	M	P
87914-8011	-------	-------	-------	-------	-------	80	-------	1	101.60	99.06	10.92	5.84	2.79
87914-8021	-------	-------	-------	-------	-------	80	-------	1	101.60	99.06	12.25	7.00	2.96
87914-8012	-------	-------	-------	-------	-------	80	-------	2	101.60	99.06	10.92	5.84	2.79
87914-8022	-------	-------	-------	-------	-------	80	-------	2	101.60	99.06	12.25	7.00	2.96
87914-8013	-------	-------	-------	-------	-------	80	-------	3	101.60	99.06	10.92	5.84	2.79
87914-8023	-------	-------	-------	-------	-------	80	-------	3	101.60	99.06	12.25	7.00	2.96
87914-8014	-------	-------	-------	-------	-------	80	-------	4	101.60	99.06	10.92	5.84	2.79
87914-8024	-------	-------	-------	-------	-------	80	-------	4	101.60	99.06	12.25	7.00	2.96
87914-8015	-------	-------	-------	-------	-------	80	-------	5	101.60	99.06	10.92	5.84	2.79
87914-8025	-------	-------	-------	-------	-------	80	-------	5	101.60	99.06	12.25	7.00	2.96
87914-8016	-------	-------	-------	-------	-------	80	-------	6	101.60	99.06	10.92	5.84	2.79
87914-8017	-------	-------	-------	-------	-------	80	-------	6	101.60	99.06	10.92	5.84	2.79
87914-8026	-------	-------	-------	-------	-------	80	-------	6	101.60	99.06	12.25	7.00	2.96
87914-8027	-------	-------	-------	-------	-------	80	-------	6	101.60	99.06	12.25	7.00	2.96
-------	87914-8001	-------	-------	-------	-------	80	-------	4	101.60	99.06	13.21	8.13	2.79
-------	87914-8002	-------	-------	-------	-------	80	-------	5	101.60	99.06	13.21	8.13	2.79
-------	87914-8003	-------	-------	-------	-------	80	-------	6	101.60	99.06	13.21	8.13	2.79
-------	87914-8004	-------	-------	-------	-------	80	-------	4	101.60	99.06	11.11	6.10	2.72
-------	87914-8005	-------	-------	-------	-------	80	-------	5	101.60	99.06	11.11	6.10	2.72
-------	87914-8006	-------	-------	-------	-------	80	-------	6	101.60	99.06	11.11	6.10	2.72
-------	87914-8007	-------	-------	-------	-------	80	-------	6	101.60	99.06	11.11	6.10	2.72

THIS DRAWING CONTAINS INFORMATION THAT IS PROPRIETARY TO MOLEX ELECTRONIC TECHNOLOGIES, LLC AND SHOULD NOT BE USED WITHOUT WRITTEN PERMISSION

DIMENSION UNITS	SCALE
mm	NTS

GENERAL TOLERANCES (UNLESS SPECIFIED)

	MM	INCH
4 PLACES	±	±
3 PLACES	±	±
2 PLACES	± 0.2	±
1 PLACE	±	±
0 PLACES	±	±
ANGULAR TOL	± 3.0 °	

DRAFT WHERE APPLICABLE MUST REMAIN WITHIN DIMENSIONS

CURRENT REV DESC:

EC NO: 717430
DRWN: DANUSA 2022/06/28
CHK'D: DANUSA 2022/08/11
APPR: MRAMAKRISHNA 2022/08/11

INITIAL REVISION:
DRWN: YLQIAO 2005/01/17
APPR: SCLOW 2005/01/25

molex

2.54MM PITCH
DUAL ROW HEADER SINGLE WAFER, T/H

PRODUCT CUSTOMER DRAWING

THIRD ANGLE PROJECTION	DRAWING	SERIES	MATERIAL NUMBER	CUSTOMER	SHEET NUMBER
	A3-SIZE	87914	SEE TABLE	GENERAL MARKET	45 OF 45

DOCUMENT NUMBER	DOC TYPE	DOC PART	REVISION
SD-87914-013	PSD	000	D23

DOCUMENT STATUS	P1	RELEASE DATE	2022/08/11 06:33:58

FORMAT: Met-lega-master-tb-prod-A3
REVISION: E
DATE: 2020/01/14