Panasonic
INDUSTRY

SP-Cap

Conductive Polymer Aluminum Electrolytic Capacitors

Surface Mount Type

CY/SY series [Guaranteed at 85 ℃]

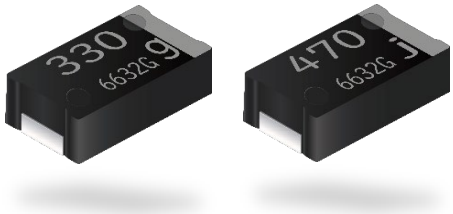

Features

- Endurance 85 ℃ 2000 h
- Product height (3.0 mm max.)
- High ripple current (5100 mA rms to 6300 mA rms max.)
- RoHS compliance, Halogen free

Specifications

Series	CY / SY		
Category temp. range	–55 ℃ to +85 ℃		
Rated voltage range	4.0 V, 6.3V		
Rated cap. range	330 µF to 470 µF		
Capacitance tolerance	±20 % (120 Hz / +20 ℃)		
DC leakage current	I ≦ 0.1 CV (µA) 2 minutes		
Dissipation factor (tan δ)	≦ 0.06 (120 Hz / + 20 ℃)		
Surge voltage (V)	Rated voltage × 1.25 (15 ℃ to 35 ℃)		
Endurance	+85 ℃ 2000 h, rated voltage applied		
	Capacitance change	Within ±20 % of the initial value	
	Dissipation factor (tan δ)	≦ 2 times of the initial limit	
	DC leakage current	≦ 3 times of the initial limit	
Damp heat (Steady state)	+60 ℃, 90 % RH, 500 h, No-applied voltage		
	Capacitance change of initial measurd value	4.0 V	6.3 V
		+60 %, –20 %	+50 %, –20 %
	Dissipation factor (tan δ)	≦ 2 times of the initial limit	
	DC leakage current	Within the initial limit	

Marking

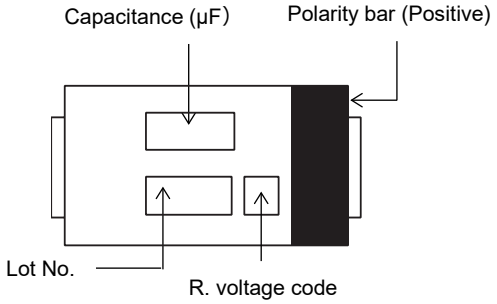

R. voltage code	Unit : V
g	4.0
j	6.3

Dimensions (not to scale)

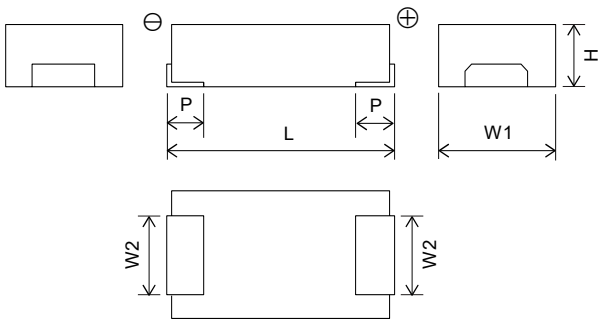

Unit : mm

Series	L±0.2	W1±0.2	W2±0.1	H±0.2	P±0.3
CY / SY	7.3	4.3	2.4	2.8	1.3

✻ Externals of figure are the reference.

Design and specifications are each subject to change without notice. Ask factory for the current technical specifications before purchase and/or use.
Should a safety concern arise regarding this product, please be sure to contact us immediately.

Characteristics list

Series	Rated voltage (V)	Capacitance (μF)	Case size (mm)			Specification		Part number	Min. Packaging Q'ty*3 (pcs)
			L	W	H	Ripple current*1 (mA rms)	ESR*2 (mΩ max.)		
CY	4.0	470	7.3	4.3	2.8	5100	15	ECGCY0G471R	2000
	6.3	330	7.3	4.3	2.8	5100	15	ECGCY0J331R	2000
SY	4.0	470	7.3	4.3	2.8	6300	9	ECGSY0G471R	2000
	6.3	330	7.3	4.3	2.8	6300	9	ECGSY0J331R	2000

*1: Ripple current (100 kHz / +45 ℃)
*2: ESR (100 kHz / +20 ℃)
*3: Please contact us when 500 pcs packing is necessary.
◆ Please refer to each page in this catarog for “Reflow conditions” and “Taping specifications”.

Temperature coefficient of ripple current

Temperature		T ≦ 45 ℃	45 ℃ < T ≦ 65 ℃	65 ℃ < T ≦ 85 ℃
4.0 V to 6.3 V	Coefficient	1.0	0.7	0.25

◆ Ripple current should be controlled so that surface temperature of capacitor does not exceed the category temperature.

Design and specifications are each subject to change without notice. Ask factory for the current technical specifications before purchase and/or use.
Should a safety concern arise regarding this product, please be sure to contact us immediately.

Guidelines and precautions regarding the technical information and use of our products described in this online catalog.

- If you want to use our products described in this online catalog for applications requiring special qualities or reliability, or for applications where the failure or malfunction of the products may directly jeopardize human life or potentially cause personal injury (e.g. aircraft and aerospace equipment, traffic and transportation equipment, combustion equipment, medical equipment, accident prevention, anti-crime equipment, and/or safety equipment), it is necessary to verify whether the specifications of our products fit to such applications. Please ensure that you will ask and check with our inquiry desk as to whether the specifications of our products fit to such applications use before you use our products.

- The quality and performance of our products as described in this online catalog only apply to our products when used in isolation. Therefore, please ensure you evaluate and verify our products under the specific circumstances in which our products are assembled in your own products and in which our products will actually be used.

- If you use our products in equipment that requires a high degree of reliability, regardless of the application, it is recommended that you set up protection circuits and redundancy circuits in order to ensure safety of your equipment.

- The products and product specifications described in this online catalog are subject to change for improvement without prior notice. Therefore, please be sure to request and confirm the latest product specifications which explain the specifications of our products in detail, before you finalize the design of your applications, purchase, or use our products.

- The technical information in this online catalog provides examples of our products' typical operations and application circuits. We do not guarantee the non-infringement of third party's intellectual property rights and we do not grant any license, right, or interest in our intellectual property.

- If any of our products, product specifications and/or technical information in this online catalog is to be exported or provided to non-residents, the laws and regulations of the exporting country, especially with regard to security and export control, shall be observed.

<Regarding the Certificate of Compliance with the EU RoHS Directive/REACH Regulations>

- The switchover date for compliance with the RoHS Directive/REACH Regulations varies depending on the part number or series of our products.

- When you use the inventory of our products for which it is unclear whether those products are compliant with the RoHS Directive/REACH Regulation, please select "Sales Inquiry" in the website inquiry form and contact us.

We do not take any responsibility for the use of our products outside the scope of the specifications, descriptions, guidelines and precautions described in this online catalog.

Notices

■ Applicable laws and regulations

・This product complies with the RoHS Directive (Restriction of the use of certain hazardous substances in electrical and electronic equipment (DIRECTIVE 2011/65/EU and （EU)2015/863)).

・No Ozone Depleting Chemicals(ODC's), controlled under the Montreal Protocol Agreement, are used in producing this product. We do not use PBBs or PBDEs as brominated flame retardants.

・Export procedure which followed export related regulations, such as foreign exchange and a foreign trade method, on the occasion of export of this product.

・These products are not dangerous goods on the transportation as identified by UN(United Nations) numbers or UN classification.

■ Limited applications

・This capacitor is designed to be used for electronics circuits such as audio/visual equipment, home appliances, computers and other office equipment, optical equipment, measuring equipment.

・An advanced specification must be signed individually for high-reliability use that might threaten human life or property due to a malfunction of the capacitor.

■ Intellectual property rights and licenses

・The technical information in this specification provides examples of our products' typical operations and application circuits. We do not guarantee the non-infringement of third party's intellectual property rights and we do not grant any license, right, or interest in our intellectual property.

Items to be observed

■ For specification

・This specification guarantees the quality and performance of the product as individual components.
The durability differs depending on the environment and the conditions of usage.
Before use, check and evaluate their compatibility with actual conditions when installed in the products.
When safety requirements cannot be satisfied in your technical examination, inform us immediately.

・Do not use the products beyond the specifications described in this document.

■ Upon application to products where safety is regarded as important

Install the following systems for a fail-safe design to ensure safety if these products are to be used in equipment where a defect in these products may cause the loss of human life or other signification damage, such as damage to vehicles (automobile, train, vessel), traffic lights, medical equipment, aerospace equipment, electric heating appliances, combustion/ gas equipment, rotating rotating equipment, and disaster/crime prevention equipment.

(1) The system is equipped with a protection circuit and protection device.
(2) The system is equipped with a redundant circuit or other system to prevent an unsafe status in the event of a single fault.

■ Conditions of use

・Before using the products, carefully check the effects on their quality and performance, and determined whether or not they can be used. These products are designed and manufactured for general-purpose and standard use in general electronic equipment. These products are not intended for use in the following special conditions.

(1) In liquid, such as Water, Oil, Chemicals, or Organic solvent.
(2) In direct sunlight, outdoors, or in dust.
(3) In vapor, such as dew condensation water of resistive element, or water leakage, salty air, or air with a high concentration corrosive gas, such as Cl_2, H_2S, NH_3, SO_2, or NOx.
(4) In an environment where strong static electricity or electromagnetic waves exist.
(5) Mounting or placing heat-generating components or inflammables, such as vinyl-coated wires, near these products.
(6) Sealing or coating of these products or a printed circuit board on which these products are mounted, with resin and other material.
(7) Using resolvent, water or water-soluble cleaner for flux cleaning agent after soldering. (In particular, when using water or a water-soluble cleaning agent, be careful not to leave water residues)
(8) Using in the atmosphere where strays acid or alkaline.
(9) Using in the atmosphere where there are excessive vibration and shock.
(10) Using in the atmosphere where there are low pressure or decompression.

・Please arrange circuit design for preventing impulse or transitional voltage.
Do not apply voltage, which exceeds the full rated voltage when the capacitors receive impulse voltage, instantaneous high voltage, high pulse voltage etc.

・Our products there is a product are using an electrolyte solution. Therefore, misuse can result in rapid deterioration of characteristics and functions of each product. Electrolyte leakage damages printed circuit and affects performance, characteristics, and functions of customer system.

⚠ Application Guidelines（SP-Cap）

1. Circuit design

1.1 Prohibited circuits for use

Do not use the SP-Cap with the following circuit.

(1) High-impedance voltage retention circuits

(2) Coupling circuits

(3) Time-constant circuit

(4) Circuit which are greatly affected by leakage current

(5) 2 or more SP-Cap connected serially

1.2 Voltage and polarity

The application of over- voltage and reverse voltage described below can cause increases in leakage current and short circuits. Applied voltage, refers to the voltage value including the peak value of the transitional Instantaneous voltage and the peak value of ripple voltage, not just steady line voltage.

Design your circuit so than the peak voltage does not exceed the stipulated voltage.

【Over-Voltage】

Do not apply over-voltage in excess of the rated voltage. Do not apply voltage, which exceeds the full rated voltage when the SP-Cap receive impulse voltage, instantaneous high voltage, high pulse voltage etc.

【Reverse-Voltage】

Do not apply reverse-voltage

1.3 Ripple current

Use the SP-Cap within the stipulated permitted ripple current.

When excessive ripple current is applied to the SP-Cap, if causes increases in leakage current and short circuits due to self-heating.

Even when using the SP-Cap under the permissible ripple current, reverse voltage may occur if the DC bias voltage is low.

1.4 Leakage current

There is a risk of leakage current characteristics increasing even if the following use environments are within the stipulated range. However, even if the leakage current increases, the SP-Cap self-repairing function will reduce the leakage current in most cases when a voltage is applied.

(1) After reflow

(2) Shelf conditions such as high temperature with no load, high temperature high humidity with no load and sudden temperature changes.

1.5 Temperature

(1) Use at or under the rated (guaranteed) temperature.

Operation at temperatures exceeding specifications causes large changes in the SP-Cap electrical properties, and deterioration than can potentially lead to failure.

When calculating the operating temperature of the SP-Cap, be sure to include not only the ambient temperature and internal temperature of the unit, but also radiation from heat generating elements inside the unit (power transistors, resistors, etc.), and self-heating due to ripple current.

(2) Specified ESR is a value at the time of shipping from factory. ESR may change upon use conditions.

1.6 Failure rate

The majority of failure modes are short circuits or increases in leakage current.

The main factors of failure are mechanical stress, heat stress and electric stress due to re-flow and heat from the use temperature environment.

Even within the stipulated limits, it is possible to lower the failure rate by reducing use conditions such as temperature and voltage. Please be sure to have ample margin in your design.

【Expected Failure Rate】

(a) Date based on our reliability tests: 8.2 Fit or less (Based on applied rated voltage at 105 °C)

(b) Market failure rate: 0.13 Fit or less (Based on c=0, Reliability standard : 60 %)

1.7 Mounting area consideration

Isolate the surface of PCB under the mounted SP-Cap.

2. Mounting

2.1 When mounting

(1) Check the SP-Cap ratings (capacitance and voltage) before mounting.
(2) Check the SP-Cap polarity before mounting.
(3) Check the land size for the SP-Cap before mounting.
(4) When using a mounter, if the pressure for mounting is too high, then the current leak may increase, shortcircuiting may occur, or the SP-Cap may break down or come off.

2.2 Soldering

(1) Reflow soldering
Be performed by one of following methods.
(a) Ambient heat conduction reflow (IR / Hot-air)
Please refer to the page of “Mounting Specifications”.
(b) Vapor phase reflow (but only allowable for CX, CT, SX, ST, GX, LX, LT and HX series).
Please contact Panasonic for details of allowable vapor phase reflow condition.
(2) Wave soldering and dip soldering
Please remind SP-Cap is NOT compatible.
(3) Hand soldering
Excessive force stress to the SP-Cap should be avoided
Conditions

Tip temperature of soldering iron	: 350 °C max.
Exposure time	: 10 s max.

※ Once removed from the printed circuit board for any reason, please do not use the SP-Cap again.

2.3 Land size

Refer to the land size of “Mounting specifications” for appropriate design dimensions.
Circuit board design requires examination of the most suitable dimensions taking conditions such as circuit board, parts and reflow into consideration.

2.4 Mechanical stress

Do not apply excessive force to the SP-Cap this can damage the electrodes and badly affect the SP-Cap mount ability. It can also cause the increase of leakage current, separation of the lead wire and element, and damage to the SP-Cap body, all of which can badly affect the electrical performance of the SP-Cap.

2.5 Circuit board cleaning

SP-Cap should be cleaned after soldering in accordance with the following conditions.

Temperature	: Less than 60 °C
Time	: Within 5min

Be sure to sufficiently wash and dry (20 min at 100 °C) the board afterward.
【Recommended Cleaning Solvents】
Pine Alpha ST-100S, Clean-thru 750H / 750L / 710M, Aqua Cleaner 210SEP, Sunelec B-12
DK Beclear CW-5790, Techno Cleaner 219, Cold Cleaner P3-375, Telpene Cleaner EC-7R
Technocare FRW-17 / FRW-1 / FRV-1, AXREL 32, IPA (Isopropyl alcohol)
(1) Consult our factory when performing processes with cleaning solvents other than those listed above or deionized water.
(2) The use of ozone depleting cleaning agents are not recommended in the interest of protecting the environment.
(3) In the case of using ultrasonic cleaning, the terminals may be broken. Therefore, please test before using in mass production.

3. Usage environment of equipment

Avoid using equipment to which SP-Cap are fi ted in the following environments.
(1) In liquid, such as Water, Oil, Chemicals, or Organic solvent.
(2) In direct sunlight, outdoors, or in dust.
(3) In vapor, such as dew condensation water of resistive element, or water leakage, salty air, or air with a high concentration corrosive gas, such as Cl2, H2S, NH3, SO2, or NO2.
(4) In an environment where strong static electricity or electromagnetic waves exist.
(5) Mounting or placing heat-generating components or inflammables, such as vinyl-coated wires, near these SP-Cap.
(6) Sealing or coating of these SP-Cap or a printed circuit board on which these SP-Cap are mounted, with resin and other material.
(7) Acid or alkaline environments.
(8) Environment subject to excessive vibration and shock.

4. Storage

SP-Cap should be stored in a moisture proof environment. Storage conditions before and after opening the moisture proof packaging as follows.
(If these conditions are exceeded, the package may absorb moisture and there is a risk of damage to the exterior due to heat stress during mounting.)

【Environment of Storage】

Temperature	: 5 ℃ to 30 ℃
Humidity	: Less than 70 %
Maximum storage term before opening the package	: 2 years after manufactured
Maximum storage condition after opening the package	: 7 days after opening

SP-Cap should be all used within the storage term after opening the package.

5. Transportation

Take sufficient care during handling because excessive vibration, or shock can cause the reliability of the SP-Cap to decrease.

6. Emergency procedures

If the SP-Cap is overheated, the resin case may emit smoke. If this occurs, immediately switch off the unit's main power supply to stop operation. Keep your face and hands away from the SP-Cap the temperature may be high enough to cause the SP-Cap to ignite and burn.

7. Discarding

Since SP-Cap are composed of various metals and resins, treat them as industrial waste when arranging for their disposal.

The precautions in using aluminum electrolytic capacitors follow the "Safety application guide for the use in fixed aluminum electrolytic capacitors for electronic equipment", RCR-2367D issued by JEITA in October 2017.
Please refer to the above application guide for details.

✻ Intellectual property right

We, Panasonic Group are providing the product and service that customers can use without anxiety, working positively on the protection of our products under intellectual property rights.

Representative patents relating to SP-Cap are as follows :

US Patent No. 7136276, No. 7787234