APS11700 and APS11760

Micropower Vertical and Planar Hall-Effect Switches

FEATURES AND BENEFITS

- Ultralow power consumption
- ASIL A functional safety compliance (pending confirmation)
- Planar and vertical Hall-effect sensor ICs
- 3.3 to 24 V operation
- Automotive-grade ruggedness and fault tolerance
  - □ Extended AEC-Q100 qualification
  - □ Internal protection circuits enable 40 V load dump compliance
  - □ Reverse-battery protection
  - □ Output short-circuit and overvoltage protection
  - □ Operation from –40°C to 165°C junction temperature
  - □ High EMC immunity
- Omnipolar and unipolar switch threshold options
- Choice of output polarity
- Open-drain output
- Solid-state reliability

PACKAGES

Not to scale



3-pin SOT23W
(suffix LH)



3-pin SIP
(suffix UA)

DESCRIPTION

The APS11700 and APS11760 families of micropower Hall-effect switches are AEC-Q100 qualified for 24 V automotive applications and compliant with ISO 26262:2011 ASIL A (pending confirmation). These sensors are temperature-stable and suited for operation over extended junction temperature ranges up to 165°C.

This family of Hall-effect switches features a micropower regulator that draws as little as 6 µA of current. The micropower regulator of these devices are designed for harsh automotive and industrial environments and features on-board overvoltage and reverse connection protection. The APS11700 and APS11760 are especially suited for direct battery connection for automotive and industrial applications up to 24 V.

Continued on next page...

TYPICAL APPLICATIONS

- Reed switch replacement
- Gear shift selectors and driver controls (PRNDL)
- Open/close sensor for LCD screens/doors/lids/trunks
- Clutch/brake position sensor
- Lighting actuation slave sensor
- Wiper home/end position sensor
- End of travel and index sensors
- Industrial controls
- White goods

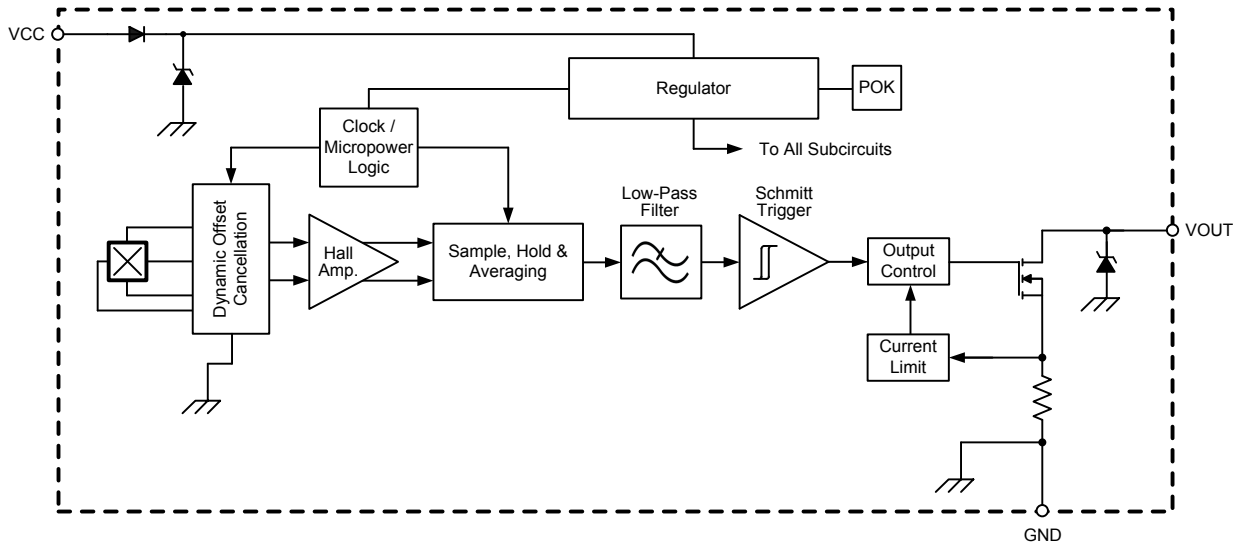

Figure 1: Functional Block Diagram

DESCRIPTION (continued)

The APS11700 and APS11760 families are available in several different magnetic sensitivities and polarities to offer flexible options for system design. They are available in active high and active low variants for ease of integration into electronic subsystems.

The APS11700 features a Hall-effect element that is sensitive to magnetic flux perpendicular to the face of the IC package. The APS11760 features a vertical Hall-effect sensing element sensitive to magnetic flux parallel to the face of the IC package.

The devices include on-board protection for operation directly from an automobile battery, as well as protection from shorts to ground by limiting the output current until the short is removed. The device is especially suited for operation from unregulated supplies.

Two package styles provide a choice of through-hole or surface mounting. Package type LH is a modified 3-pin SOT23W surface-mount package, while package type UA is a 3-pin ultramini SIP for through-hole mounting. Both packages are lead (Pb) free, with 100% matte-tin-plated leadframes.

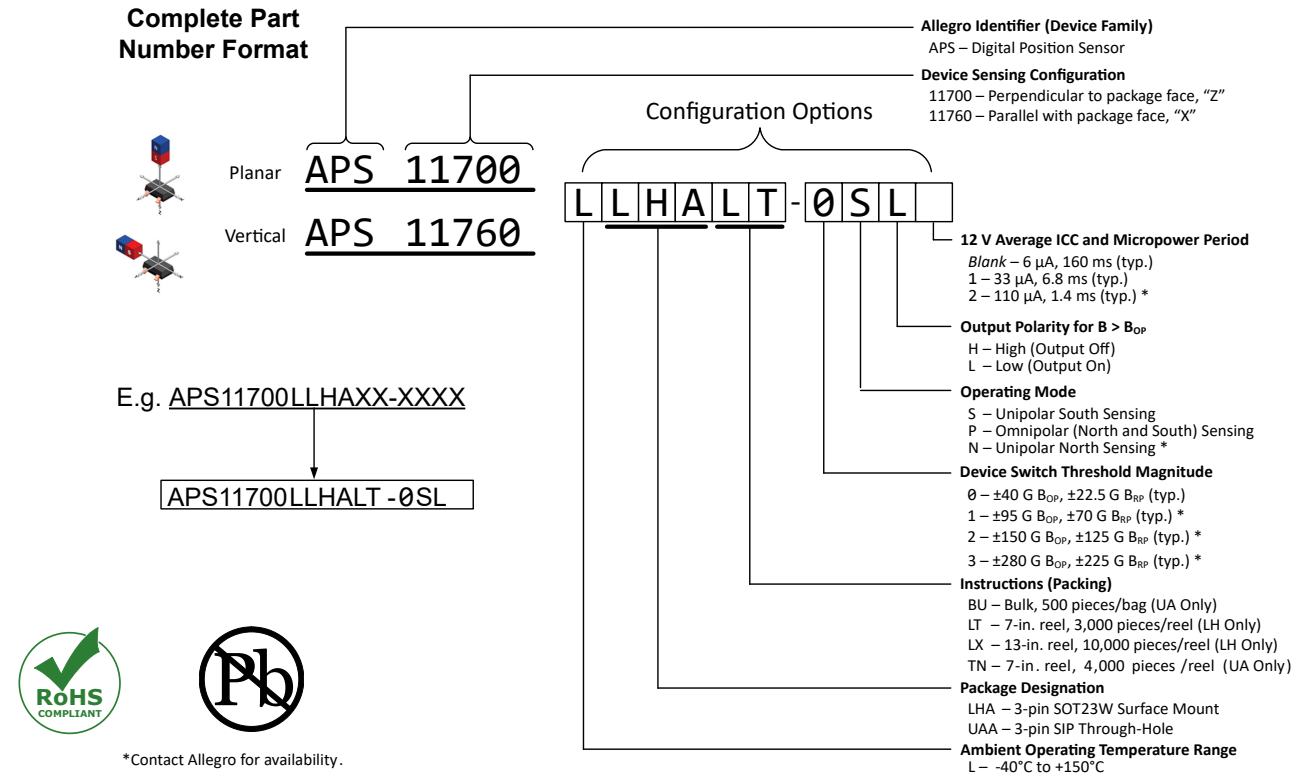

ALLEGRO microsystems
Allegro MicroSystems
955 Perimeter Road
Manchester, NH 03103-3353 U.S.A.
www.allegromicro.com

SELECTION GUIDE

Part Number [1]	Packing [2]	Mounting	Sensing Orientation	Average Supply Current (µA)	Operating Mode	Typical Operate Point (G)
APS11700LLHALT-0SL	7-in. reel, 3000 pieces/reel	3-pin SOT23W surface mount	Z-Axis	6	Unipolar South	40
APS11700LLHALX-0SL	13-in. reel, 10000 pieces/reel	3-pin SOT23W surface mount				
APS11700LUAA-0SL	Bulk, 500 pieces/bag	3-pin SIP through-hole				
APS11700LLHALT-0SL1	7-in. reel, 3000 pieces/reel	3-pin SOT23W surface mount	Z-Axis	33	Unipolar South	40
APS11700LLHALX-0SL1	13-in. reel, 10000 pieces/reel	3-pin SOT23W surface mount				
APS11700LLHALT-0PL	7-in. reel, 3000 pieces/reel	3-pin SOT23W surface mount	Z-Axis	6	Omnipolar	±40
APS11700LLHALX-0PL	13-in. reel, 10000 pieces/reel	3-pin SOT23W surface mount				
APS11700LUAA-0PL	Bulk, 500 pieces/bag	3-pin SIP through-hole				
APS11760LLHALT-0SL	7-in. reel, 3000 pieces/reel	3-pin SOT23W surface mount	X-Axis	6	Unipolar South	40
APS11760LLHALX-0SL	13-in. reel, 10000 pieces/reel	3-pin SOT23W surface mount				
APS11760LUAA-0SL	Bulk, 500 pieces/bag	3-pin SIP through-hole	Y-Axis			
APS11760LLHALT-0SL1	7-in. reel, 3000 pieces/reel	3-pin SOT23W surface mount	X-Axis	33	Unipolar South	40
APS11760LLHALX-0SL1	13-in. reel, 10000 pieces/reel	3-pin SOT23W surface mount				
APS11760LLHALT-0PL	7-in. reel, 3000 pieces/reel	3-pin SOT23W surface mount	X-Axis	6	Omnipolar	±40
APS11760LLHALX-0PL	13-in. reel, 10000 pieces/reel	3-pin SOT23W surface mount				
APS11760LUAA-0PL	Bulk, 500 pieces/bag	3-pin SIP through-hole	Y-Axis			

[1] Contact Allegro MicroSystems for options not listed in the selection guide.
[2] Contact Allegro MicroSystems for additional packing options.

Allegro MicroSystems
955 Perimeter Road
Manchester, NH 03103-3353 U.S.A.
www.allegromicro.com

ABSOLUTE MAXIMUM RATINGS

Characteristic	Symbol	Notes	Rating	Units
Supply Voltage [1]	V_{CC}		40	V
Reverse Supply Voltage [1]	V_{RCC}		–18	V
Output Voltage [1]	V_{OUT}		–0.3 to 32	V
Output Current [2]	I_{OUT}		40	mA
Reverse Output Current	I_{ROUT}		–50	mA
Magnetic Flux Density [3]	B		Unlimited	G
Operating Ambient Temperature	T_A	Range L	–40 to 150	°C
Maximum Junction Temperature	$T_{J(max)}$		165	°C
Storage Temperature	T_{stg}		–65 to 170	°C

[1] This rating does not apply to extremely short voltage transients. Transient events such as Load Dump and/or ESD have individual, specific ratings.
[2] Through short-circuit current limiting device.
[3] Guaranteed by design.

ESD PERFORMANCE [4]

Characteristic	Symbol	Notes	Rating	Units
ESD Voltage	$V_{ESD(HBM)}$	Human Body Model according to AEC-Q100-002	±11	kV

[4] ESD ratings provided are based on qualification per AEC-Q100 as an expected level of ESD robustness.

Allegro MicroSystems
955 Perimeter Road
Manchester, NH 03103-3353 U.S.A.
www.allegromicro.com

PINOUT DIAGRAMS AND TERMINAL LIST

(View from branded face)

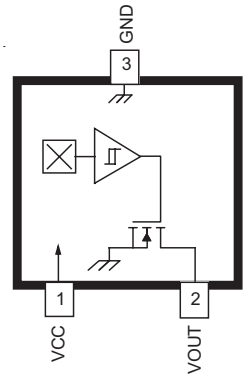

3-pin SOT23W
(suffix LH)

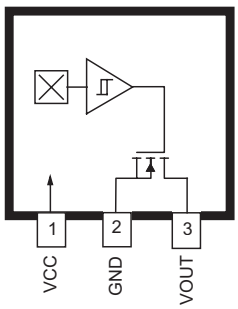

3-pin SIP
(suffix UA)

Terminal List

Name	Description	Number	
		LH	UA
VCC	Connects power supply to chip	1	1
VOUT	Output from circuit	2	3
GND	Terminal for ground connection	3	2

Allegro MicroSystems
955 Perimeter Road
Manchester, NH 03103-3353 U.S.A.
www.allegromicro.com

ELECTRICAL CHARACTERISTICS: Valid over full operating voltage and ambient temperature ranges for $T_J < T_J(max)$ and C_{BYP} = 0.1 µF, unless otherwise specified

Characteristics	Symbol	Test Conditions		Min.	Typ. [1]	Max.	Unit
SUPPLY AND STARTUP							
Supply Voltage	V_{CC}			3.3	–	24	V
Supply Current [2][3]	$I_{CC(AVG)25C}$	V_{CC} = 12 V, T_A = 25°C, Output Off	-xxx Option	–	6	–	µA
			-xxx1 Option	–	33	–	µA
	$I_{CC(AVG)85C}$	V_{CC} = 12 V, T_A = –40°C to 85°C, Output Off	-xxx Option	2	6	15	µA
			-xxx1 Option	2	33	45	µA
	$I_{CC(AVG)150C}$	T_A = 150°C, Output Off	-xxx Option	2	11.3	40	µA
			-xxx1 Option	2	38	50	µA
	$I_{CC(EN)}$	Device in awake mode	APS11700	1	2.2	4	mA
			APS11760	1	2.5	5	mA
	$I_{CC(DIS)}$	Device in sleep mode		2	–	35	µA
Power-On Time [4]	t_{PO}	$V_{CC} \geq V_{CC}(min)$		–	180	350	µs
Power-On State [5]	POS	$V_{CC} \geq V_{CC}(min)$, $t < t_{PO}$			High		–
Undervoltage Lockout [6]	$V_{CC(UV)EN}$	Enable, valid during t_{AWAKE} only; $V_{CC} \geq V_{CC}(min) \rightarrow V_{CC} < V_{CC}(min)$		1.9	2.25	–	V
	$V_{CC(UV)DIS}$	Release, valid during t_{AWAKE} only; $V_{CC} < V_{CC}(min) \rightarrow V_{CC} \geq V_{CC}(min)$		–	2.5	3	V
UVLO Reset Time [6]	t_{POR}			–	100	–	µs
MICROPOWER OPERATION (See Figure 4)							
Period	t_{PERIOD}		-xxx Option	–	160	220	ms
			-xxx1 Option	–	6.8	9	ms
Awake	t_{AWAKE}			–	50	–	µs
Sleep	t_{SLEEP}	$t_{PERIOD} - t_{AWAKE}$	-xxx Option	–	159.95	–	ms
			-xxx1 Option	–	6.85	–	ms
Micropower Operation Duty Cycle	DC_t		-xxx Option	–	0.03	–	%
			-xxx1 Option	–	0.73	–	%

[1] Typical data is at T_A = 25°C and V_{CC} = 12 V unless otherwise noted.
[2] Average current measured for one micropower period, $t_{AWAKE} + t_{SLEEP}$.
[3] Average supply current up to T_A = 85°C, $I_{CC(AVG)85C}$, is guaranteed by device design and characterization.
[4] Measured from $V_{CC} \geq 3.3$ V to valid output.
[5] See Power-On Behavior section and Figure 4.
[6] See Undervoltage Lockout Operation section for operational characteristics.

Allegro MicroSystems
955 Perimeter Road
Manchester, NH 03103-3353 U.S.A.
www.allegromicro.com

ELECTRICAL CHARACTERISTICS (continued): Valid over full operating voltage and ambient temperature ranges for $T_J < T_J(max)$ and C_{BYP} = 0.1 µF, unless otherwise specified

Characteristics	Symbol	Test Conditions	Min.	Typ. [7]	Max.	Unit
CHOPPER STABILIZATION AND OUTPUT MOSFET CHARACTERISTICS						
Chopping Frequency	f_C		–	800	–	kHz
Output Leakage Current [8]	I_{OUTOFF}	$V_{OUT(OFF)}$ = 12 V, T_A = –40°C to 85°C, output off, $V_{CC} \geq V_{CC(min)}$, $t > t_{PO}$	–	–	0.1	µA
Output Leakage Current	I_{OUTOFF}	$V_{OUT(OFF)}$ = 24 V, output off, $V_{CC} \geq V_{CC(min)}$, $t > t_{PO}$	–	–	1	µA
Output Leakage Current, Power-On [8][9]	$I_{OUTOFF(PO)}$	$V_{CC} \geq V_{CC(min)}$, $t < t_{PO}$	–	–	95	µA
Output Saturation Voltage	$V_{OUT(SAT)}$	Output on, I_{OUT} = 5 mA	–	100	500	mV
Output Off Voltage [10]	$V_{OUT(OFF)}$	$V_{OUT} \leq V_{OUT(OFF)}(max)$	–	–	24	V
Output Rise Time [11][12]	t_r	C_L = 20 pF, $R_{PULL-UP}$ = 4.8 kΩ	–	0.2	2	µs
Output Fall Time [11][12]	t_f	C_L = 20 pF, $R_{PULL-UP}$ = 4.8 kΩ	–	0.1	2	µs
ON-BOARD PROTECTION						
Output Short-Circuit Current Limit [10]	I_{OM}	Output on, $V_{PULL-UP} \leq$ 24 V	15	25	40	mA
Output Zener Clamp Voltage	$V_{Z(OUT)}$	I_{OUT} = 1.5 mA, T_A = 25°C	32	–	–	V
Supply Zener Clamp Voltage	V_Z	$I_{CC} = I_{CC}(max)$ + 3 mA, T_A = 25°C	40	–	–	V
Reverse Battery Zener Clamp Voltage	V_{RZ}	I_{CC} = –5 mA, T_A = 25°C	–	–	–18	V
Reverse Battery Current	I_{RCC}	V_{CC} = –18 V, T_A = 25°C	–5	–	–	mA

[7] Typical data is at T_A = 25°C and V_{CC} = 12 V unless otherwise noted; for design information only.
[8] Guaranteed by device design and characterization.
[9] See Power-On Behavior section and Figure 4.
[10] Refer to Figure 7 for typical and enhanced application circuits.
[11] C_L = oscilloscope probe capacitance.
[12] See Figure 2 - Definition of Output Rise and Fall Time.

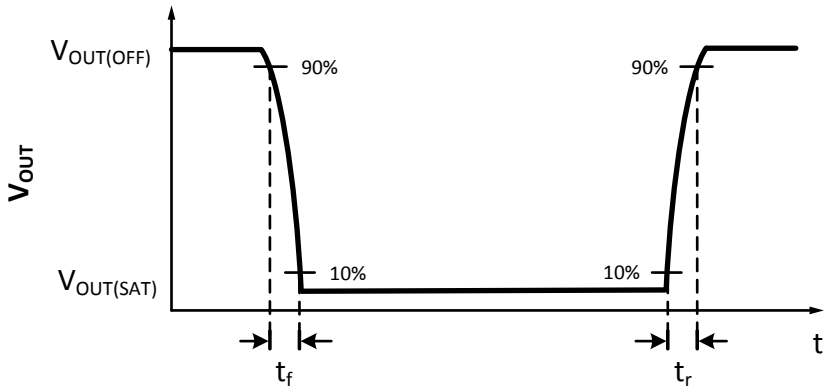

Figure 2: Definition of Output Rise and Fall Time

Allegro MicroSystems
955 Perimeter Road
Manchester, NH 03103-3353 U.S.A.
www.allegromicro.com

MAGNETIC CHARACTERISTICS: Valid over full operating voltage and ambient temperature ranges for $T_J < T_J(max)$ and C_{BYP} = 0.1 µF, unless otherwise specified

Characteristics	Symbol	Test Conditions	Min.	Typ. [1]	Max.	Unit [2]
-0Pxx OPTION						
Operate Point	B_{OPS}	-0Pxx Option	10	40	70	G
	B_{OPN}	-0Pxx Option	–70	–40	–10	G
Release Point	B_{RPS}	-0Pxx Option	5	22.5	50	G
	B_{RPN}	-0Pxx Option	–50	–22.5	–5	G
Hysteresis [3]	B_{HYS}	-0Pxx Option	5	17.5	40	G
-0Sxx OPTION						
Operate Point	B_{OPS}	-0Sxx Option	10	40	70	G
Release Point	B_{RPS}	-0Sxx Option	5	22.5	50	G
Hysteresis [3]	B_{HYS}	-0Sxx Option	5	17.5	40	G
-0Nxx OPTION						
Operate Point	B_{OPN}	-0Nxx Option	–70	–40	–10	G
Release Point	B_{RPN}	-0Nxx Option	–50	–22.5	–5	G
Hysteresis [3]	B_{HYS}	-0Nxx Option	5	17.5	40	G

Continued on next page...

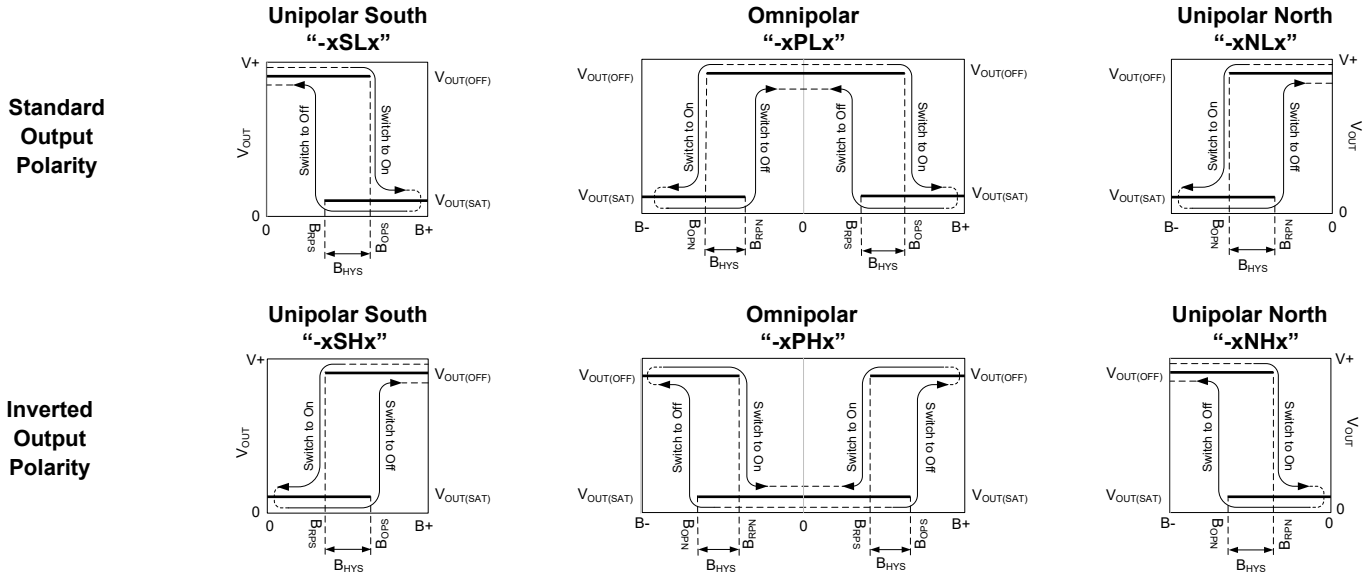

Figure 3: Hall Switch Output State vs. Magnetic Field

B- indicates increasing north polarity magnetic field strength, and B+ indicates increasing south polarity magnetic field strength.

Allegro MicroSystems
955 Perimeter Road
Manchester, NH 03103-3353 U.S.A.
www.allegromicro.com

MAGNETIC CHARACTERISTICS (continued): Valid over full operating voltage and ambient temperature ranges for $T_J < T_J(max)$ and C_{BYP} = 0.1 µF, unless otherwise specified

Characteristics	Symbol	Test Conditions	Min.	Typ. [1]	Max.	Unit [2]
-1Pxx OPTION [4]						
Operate Point	B_{OPS}	-1Pxx Option	50	95	135	G
	B_{OPN}	-1Pxx Option	–135	–95	–50	G
Release Point	B_{RPS}	-1Pxx Option	40	70	110	G
	B_{RPN}	-1Pxx Option	–110	–70	–40	G
Hysteresis [3]	B_{HYS}	-1Pxx Option	10	30	47.5	G
-1Sxx OPTION [4]						
Operate Point	B_{OPS}	-1Sxx Option	50	95	135	G
Release Point	B_{RPS}	-1Sxx Option	40	70	110	G
Hysteresis [3]	B_{HYS}	-1Sxx Option	10	30	47.5	G
-1Nxx OPTION [4]						
Operate Point	B_{OPN}	-1Nxx Option	–135	–95	–50	G
Release Point	B_{RPN}	-1Nxx Option	–110	–70	–40	G
Hysteresis [3]	B_{HYS}	-1Nxx Option	10	30	47.5	G
-2Pxx OPTION [4]						
Operate Point	B_{OPS}	-2Pxx Option	120	150	200	G
	B_{OPN}	-2Pxx Option	–200	–150	–120	G
Release Point	B_{RPS}	-2Pxx Option	110	125	190	G
	B_{RPN}	-2Pxx Option	–190	–125	–110	G
Hysteresis [3]	B_{HYS}	-2Pxx Option	10	30	47.5	G
-2Sxx OPTION [4]						
Operate Point	B_{OPS}	-2Sxx Option	120	150	200	G
Release Point	B_{RPS}	-2Sxx Option	110	125	190	G
Hysteresis [3]	B_{HYS}	-2Sxx Option	10	30	47.5	G
-2Nxx OPTION [4]						
Operate Point	B_{OPN}	-2Nxx Option	–200	–150	–120	G
Release Point	B_{RPN}	-2Nxx Option	–190	–125	–110	G
Hysteresis [3]	B_{HYS}	-2Nxx Option	10	30	47.5	G

[1] Typical data are at T_A = 25°C and V_{CC} = 12 V unless otherwise noted.
[2] Magnetic flux density, B, is indicated as a negative value for north-polarity magnetic fields, and a positive value for south-polarity magnetic fields.
[3] Guaranteed by device design and characterization.
[4] Contact Allegro MicroSystems for availability.

Allegro MicroSystems
955 Perimeter Road
Manchester, NH 03103-3353 U.S.A.
www.allegromicro.com

PACKAGE THERMAL CHARACTERISTICS: Device power consumption is extremely low. On-chip power dissipation will not be an issue under normal operating conditions.

Characteristic	Symbol	Test Conditions	Value	Units
Package Thermal Resistance	$R_{\theta JA}$	Package LH, 1-layer PCB with copper limited to solder pads	228	°C/W
		Package LH, 2-layer PCB with 0.463 in.^{2} of copper area each side connected by thermal vias	110	°C/W
		Package UA, 1-layer PCB with copper limited to solder pads	165	°C/W

Power Dissipation versus Ambient Temperature

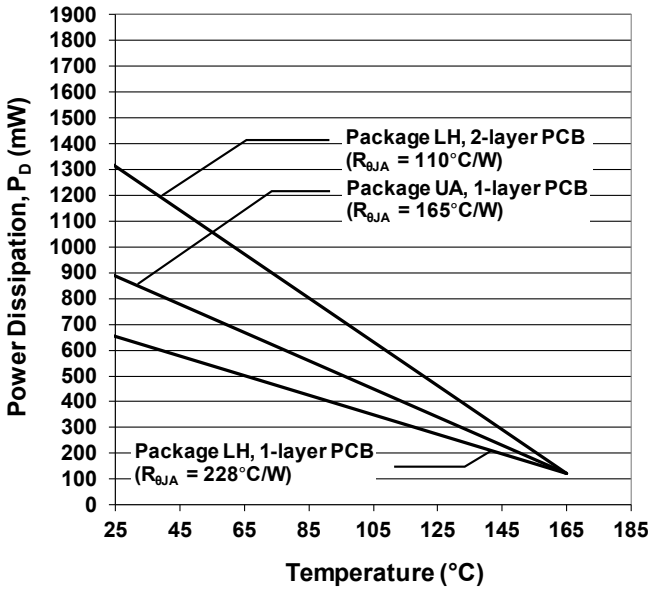

Allegro MicroSystems
955 Perimeter Road
Manchester, NH 03103-3353 U.S.A.
www.allegromicro.com

CHARACTERISTIC PERFORMANCE DATA
Electrical Characteristics

Average Supply Current versus Supply Voltage
(-xxx Option, Output Off)

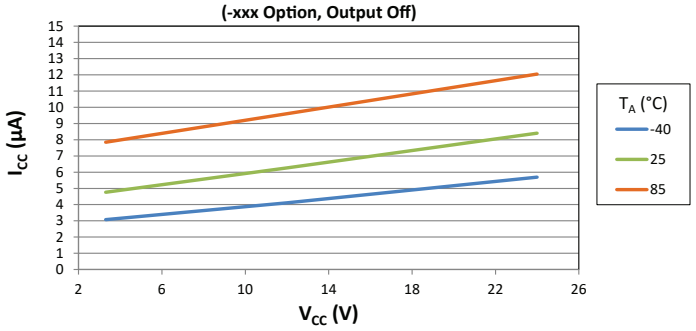

Average Supply Current versus Ambient Temperature
(-xxx Option, Output Off)

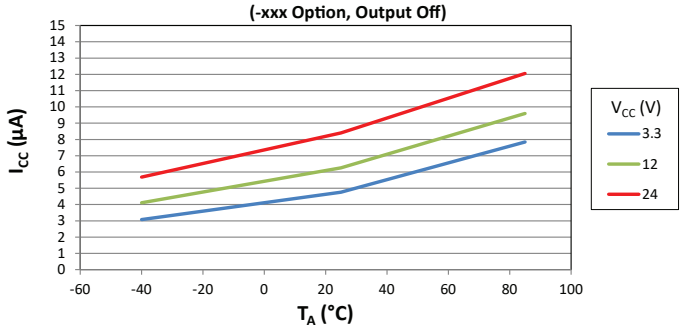

Average Supply Current versus Supply Voltage for T_A = 150°C
(-xxx Option, Output Off)

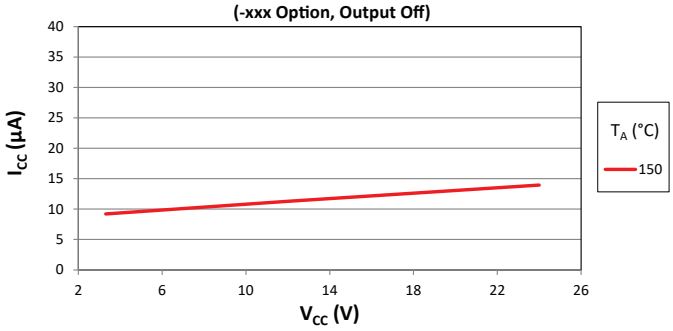

Average Sleep Mode Period versus Supply Voltage
(-xxx Option, Output Off)

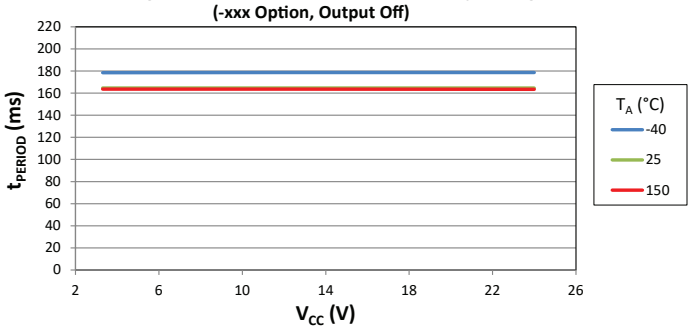

Average Sleep Mode Period versus Ambient Temperature
(-xxx Option, Output Off)

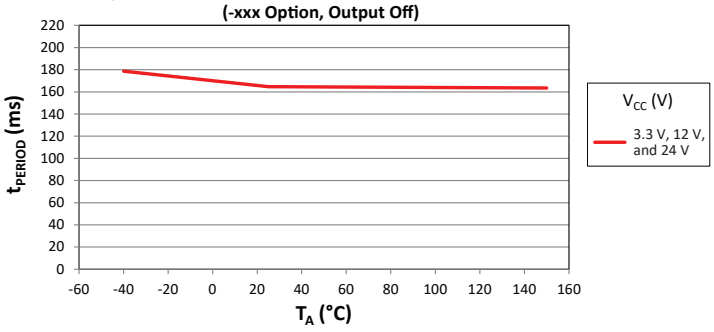

Average Output Saturation Voltage versus Supply Voltage
for I_{OUT} = 5 mA

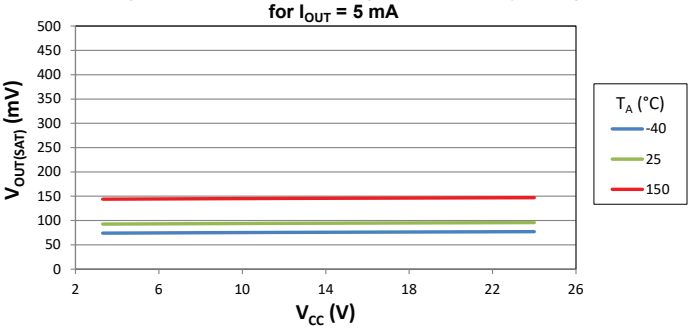

Average Output Saturation Voltage versus Ambient
Temperature for I_{OUT} = 5 mA

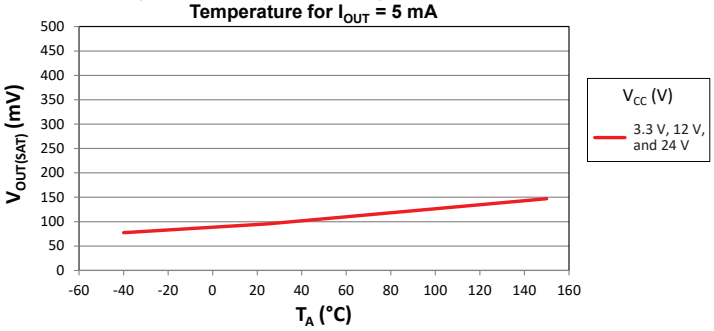

ALLEGRO microsystems
Allegro MicroSystems
955 Perimeter Road
Manchester, NH 03103-3353 U.S.A.
www.allegromicro.com

CHARACTERISTIC PERFORMANCE DATA
Magnetic Characteristics
-0xx Option

Average Operate Point versus Supply Voltage

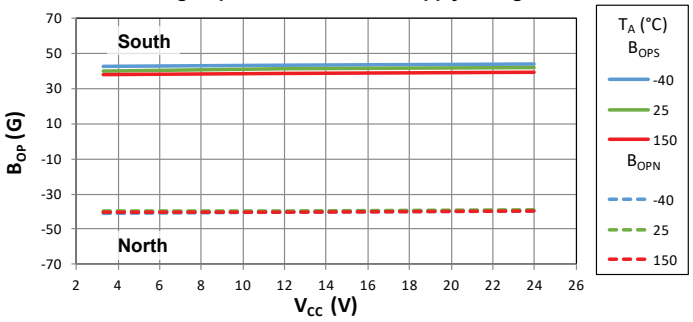

Average Operate Point versus Ambient Temperature

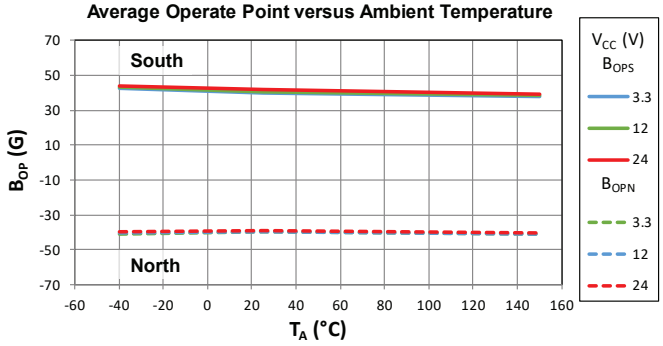

Average Release Point versus Supply Voltage

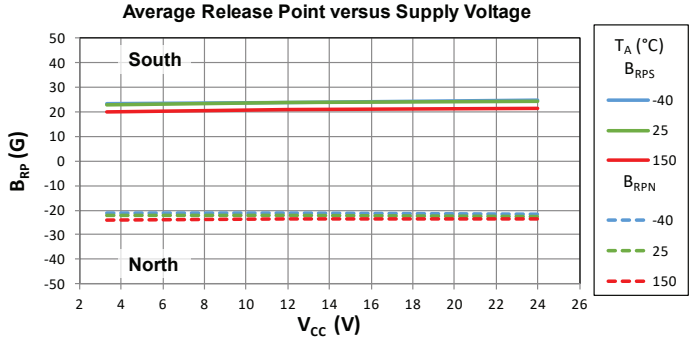

Average Release Point versus Ambient Temperature

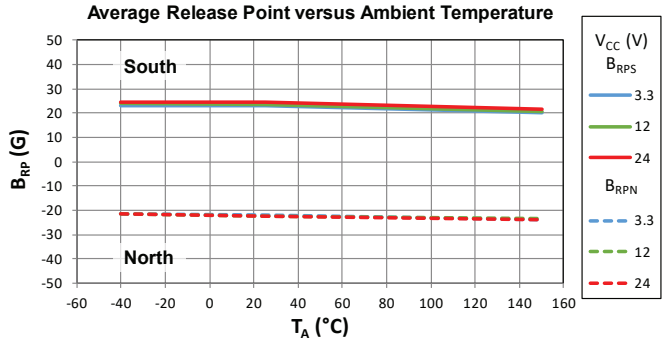

Average Hysteresis versus Supply Voltage

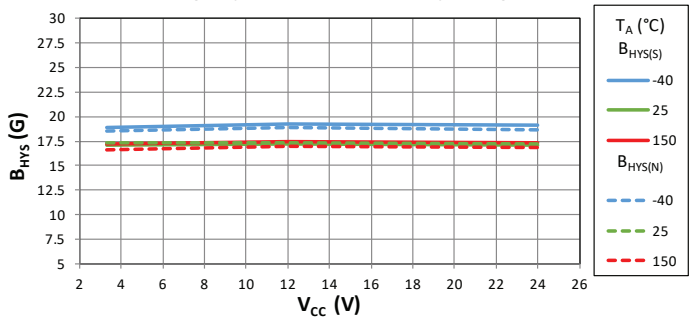

Average Hysteresis versus Ambient Temperature

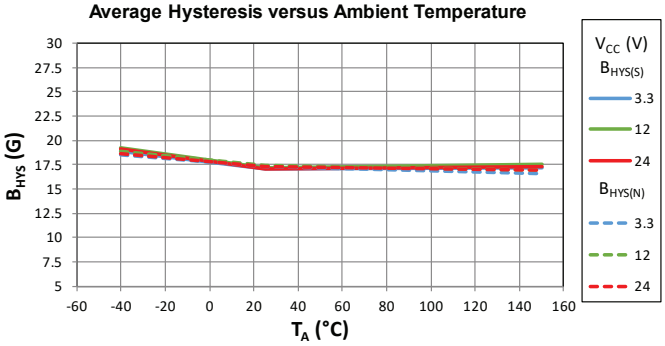

Allegro MicroSystems
955 Perimeter Road
Manchester, NH 03103-3353 U.S.A.
www.allegromicro.com

CHARACTERISTIC PERFORMANCE DATA
Magnetic Characteristics
-1xx Option

Average Operate Point versus Supply Voltage

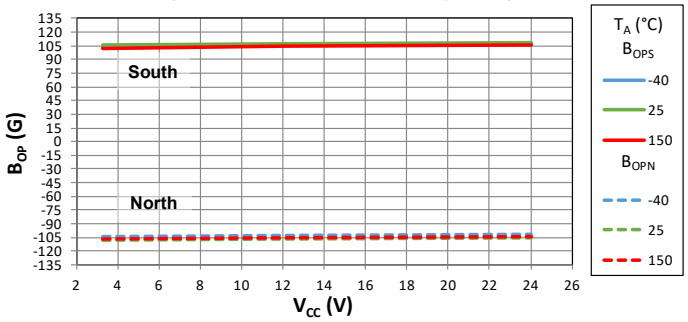

Average Operate Point versus Ambient Temperature

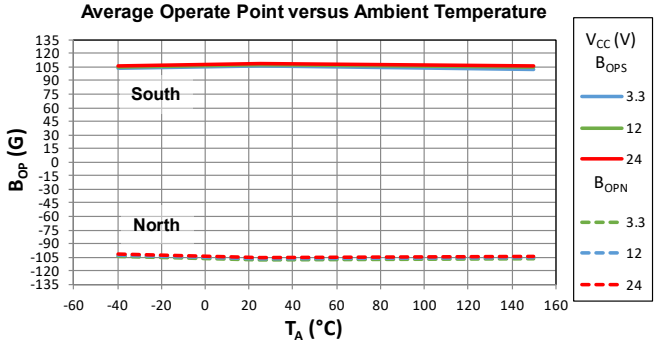

Average Release Point versus Supply Voltage

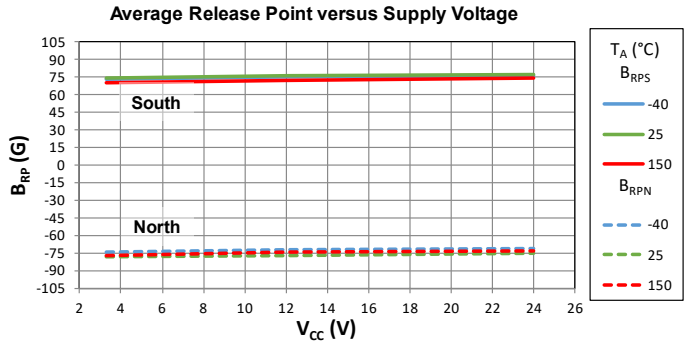

Average Release Point versus Ambient Temperature

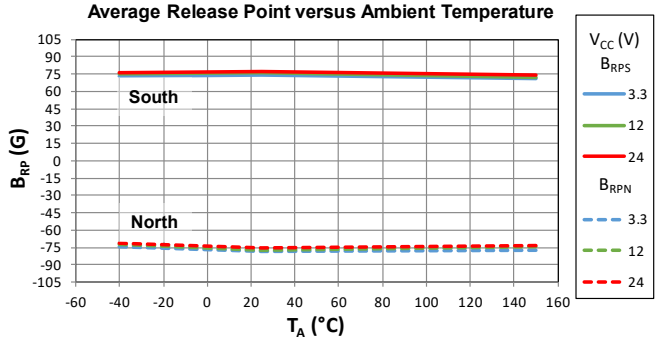

Average Hysteresis versus Supply Voltage

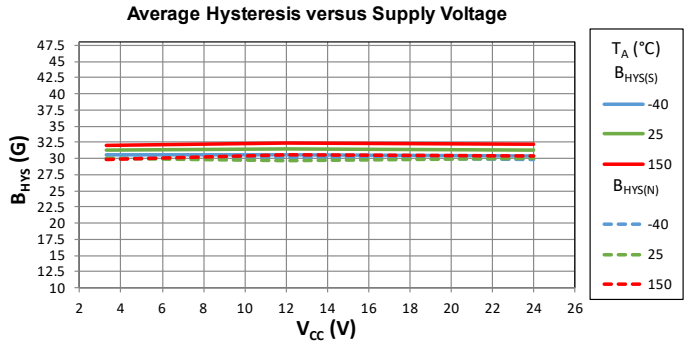

Average Hysteresis versus Ambient Temperature

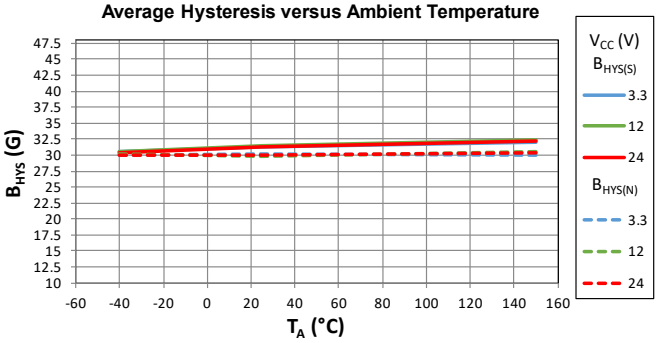

Allegro MicroSystems
955 Perimeter Road
Manchester, NH 03103-3353 U.S.A.
www.allegromicro.com

CHARACTERISTIC PERFORMANCE DATA
Magnetic Characteristics
-2xx Option

Average Operate Point versus Supply Voltage

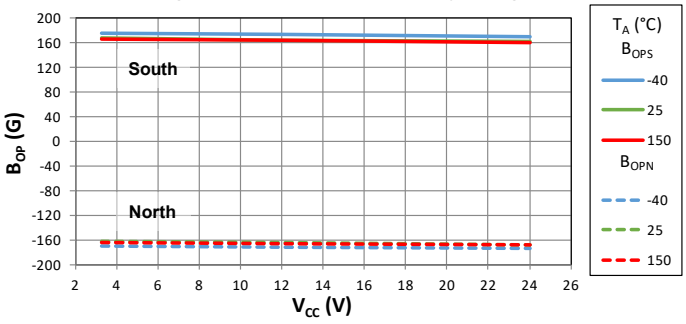

Average Operate Point versus Ambient Temperature

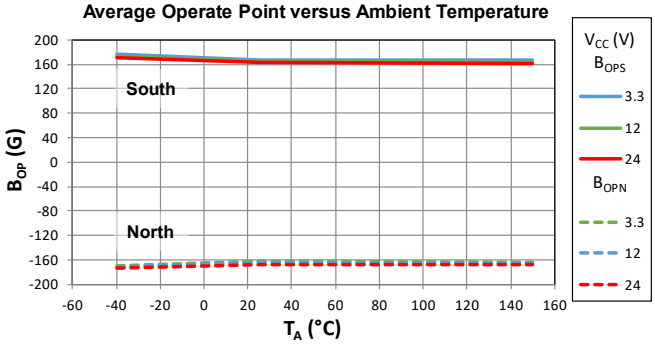

Average Release Point versus Supply Voltage

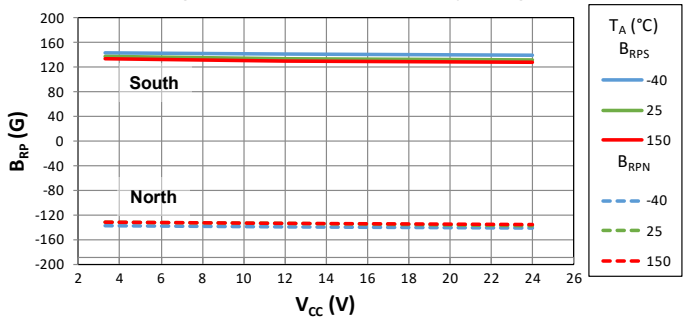

Average Release Point versus Ambient Temperature

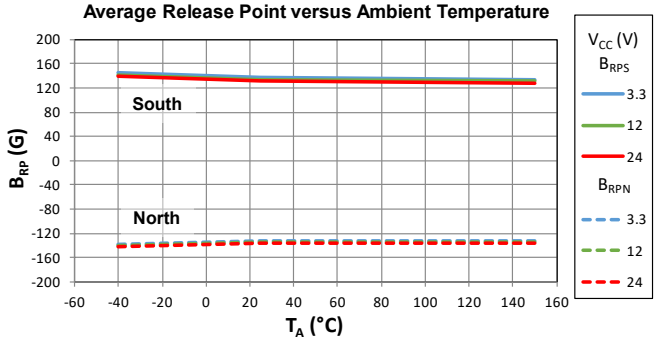

Average Hysteresis versus Supply Voltage

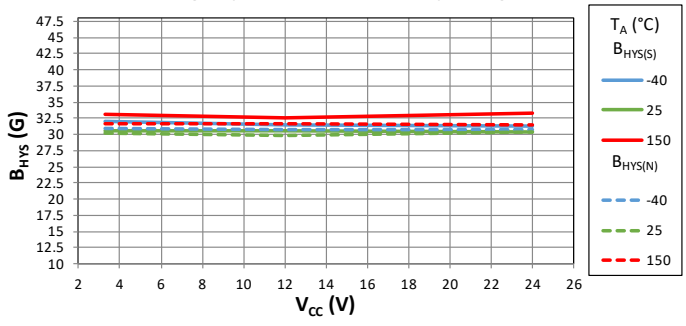

Average Hysteresis versus Ambient Temperature

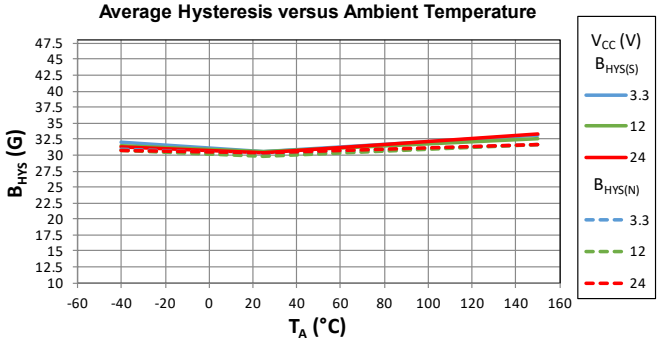

ALLEGRO microsystems
Allegro MicroSystems
955 Perimeter Road
Manchester, NH 03103-3353 U.S.A.
www.allegromicro.com

FUNCTIONAL DESCRIPTION

Low Average Power

The built-in micropower control periodically activates the Hall switch circuitry for a short period of time (t_{AWAKE}), and deactivates it for the remainder of the period (t_{PERIOD}). See Figure 4: Micropower Operation and Power-On Behavior, for an example of the system timing and the behavior of the device during the power-on sequence. The short duration awake state allows for sensor stabilization prior to sampling the Hall switch and latching the state on the output. The output is latched on the falling edge of the timing pulse and held in the last sampled state during the sleep period; updates to the output only occur on the falling edge of the timing pulse. The micropower control operates independently of the output driver state.

Power-On Behavior

Device power-on begins when the supply voltage reaches V_{CC}(min). During the power-on time, t_{PO}, the device output is off with the exception of $I_{OUTOFF(PO)}$. Use of a large pull-up resistor, $R_{PULL-UP}$ (see Figure 7), can influence the Power-On State (POS) voltage level on the output pin during t_{ON}. The output voltage level during the POS is a function of the pull-up resistor and pull-up voltage. The Power-On State voltage level can be determined by subtracting the voltage drop created by $R_{PULL-UP}$ and $I_{OUTOFF(PO)}$ from the pull-up voltage:

$$V_{OUT} = V_{OUT(OFF)} - (I_{OUTOFF(PO)} \times R_{PULL-UP})$$

To retain a power-on output voltage level above $V_{PULL-UP}$ / 2, a pull-up resistor less than or equal to 20 kΩ is recommended. After power-on is complete and the power-on time has elapsed, the device output will correspond with the applied magnetic field for $B > B_{OP}$ and $B < B_{RP}$. Powering-on the device in the hysteresis range (less than B_{OP} and higher than B_{RP}) will cause the device output to remain off. A valid output state is attained after the first excursion beyond B_{OP} or B_{RP}.

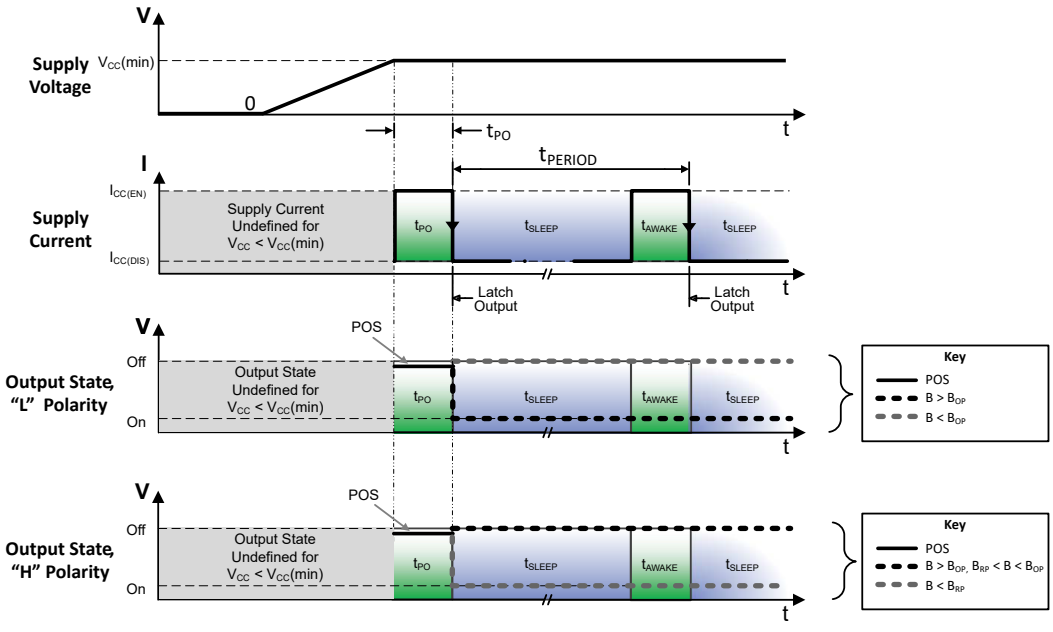

Figure 4: Micropower Operation and Power-On Behavior

Allegro MicroSystems
955 Perimeter Road
Manchester, NH 03103-3353 U.S.A.
www.allegromicro.com

Functional Safety

The APS11700 and APS11760 were developed in accordance with ISO 26262:2011 as hardware Safety Elements out of Context (SEooC) with ASIL A capability (pending confirmation) for use in automotive safety-related systems when integrated and used in the manner prescribed in the applicable safety manual and this datasheet. These devices can be easily integrated into safety-critical systems requiring higher ASIL ratings that incorporate external diagnostics or use measures such as redundancy. Safety documentation will be provided to support and guide the integration process. For further information, contact your local FAE for A^2-SIL™ documentation: www.allegromicro.com/ASIL.

Undervoltage Lockout Operation

The APS11700 and APS11760 have an internal diagnostic to check the voltage supply (an undervoltage lockout regulator). When the supply voltage falls below the undervoltage lockout voltage, $V_{CC(UV)EN}$, the device will enter reset, where the output state returns to the High state (the Power-On State) until V_{CC} is increased to $V_{CC(UV)DIS}$. The supply voltage monitor employed by the undervoltage lockout circuit is only active during the awake time. Therefore, undervoltage lockout can be enabled and disabled only when the device is in the awake state. See Figure 5 for an example. When enabled, the supply current will be $I_{CC(EN)}$.

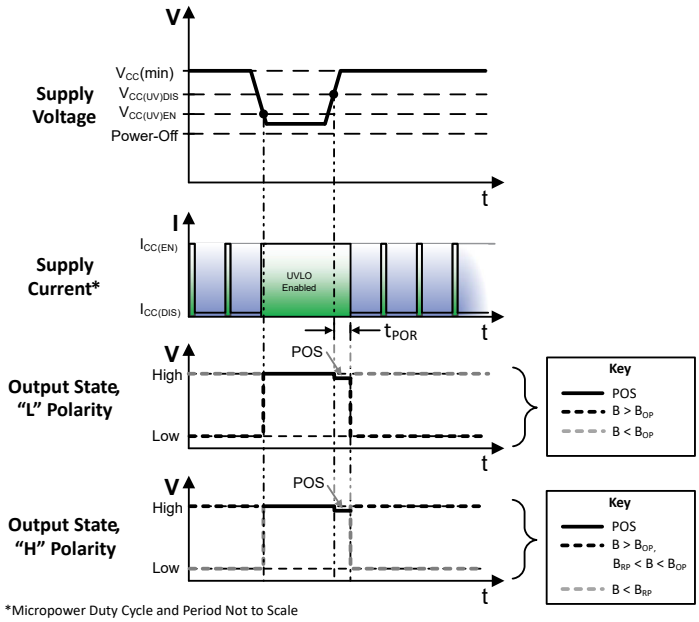

*Micropower Duty Cycle and Period Not to Scale

Figure 5: Undervoltage Lockout Behavior

Once V_{CC} is restored to above $V_{CC(UV)DIS}$, the power-on sequence begins and the output will correspond with the applied magnetic field for $B > B_{OP}$ and $B < B_{RP}$ after t_{POR} has elapsed. In the case the supply voltage does not return to these operational levels, or if the applied magnetic field is within the hysteresis range, the output will remain in the power-on state.

Operation

The APS11700 and APS11760 are integrated Hall-effect sensor ICs with an open-drain output. Table 1 offers a guide for selecting the output polarity configuration, further explained in the configuration sections below. The output is an open-drain NMOS transistor that actuates in response to a magnetic field. The direction of the applied magnetic field is perpendicular to the branded face for the APS11700, and parallel with the branded face for the APS11760; see Figure 6 for an illustration. The devices are offered in two packages: the UA package, a 3-pin through-hole mounting configuration, or in the LH package, a 3-pin surface-mount configuration. See the Selection Guide for a complete list of available options.

Configurations xSLx and xSHx. The unipolar output of these devices is actuated when a south-polarity magnetic field perpendicular to the Hall element exceeds the operate point threshold, B_{OPS}. When B_{OPS} is exceeded, the xSLx output turns on (goes

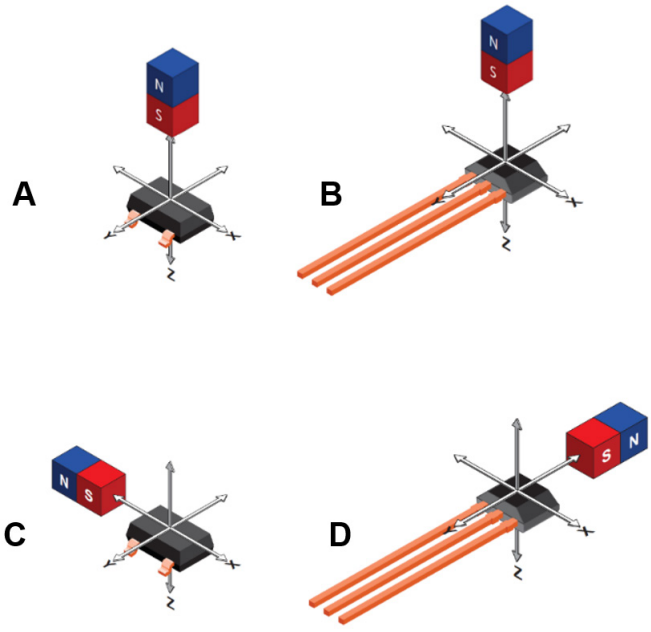

Figure 6: Magnetic Sensing Orientations
APS11700 LH (Panel A), APS11700 UA (Panel B), APS11760 LH (Panel C) and APS11760 UA (Panel D)

Allegro MicroSystems
955 Perimeter Road
Manchester, NH 03103-3353 U.S.A.
www.allegromicro.com

low). The xSHx is complementary, in that for this device the output turns off (goes high) when B_{OPS} is exceeded. When the magnetic field is removed or reduced below the release point, B_{RPS}, the device outputs return to their original state—off for the xSLx and on for the xSHx. See Figure 3 for unipolar south switching behavior.

Configurations xNLx and xNHx. The unipolar output of these devices is actuated when a north-polarity magnetic field perpendicular to the Hall element exceeds the operate point threshold, B_{OPN}. When B_{OPN} is exceeded, the xNLx output turns on (goes low). The xNHx is complementary, in that for this device the output turns off (goes high) when B_{OPN} is exceeded. When the magnetic field is removed or reduced below the release point, B_{RPN}, the device outputs return to their original state—off for the xNLx and on for the xNHx. See Figure 3 for unipolar north switching behavior.

Table 1: Switch Polarity Configuration Options

Part Number Suffix	Operating Mode	Output State for $B > B_{OP}$	Output State for B = 0 G	Power-On State, $t < t_{PO}$
xSLx	Unipolar South	Low	High	High
xSHx	Unipolar South	High	Low	High
xNLx	Unipolar North	Low	High	High
xNHx	Unipolar North	High	Low	High
xPLx	Omnipolar	Low	High	High
xPHx	Omnipolar	High	Low	High

Configurations xPLx and xPHx. The omnipolar operation of these devices allows actuation with either a north or a south polarity field. The xPLx operates using the standard output polarity convention. Fields exceeding the operating points, B_{OPS} or B_{OPN}, will turn the output on (low). When the magnetic field is removed or reduced below the release point, B_{RPN} or B_{RPS}, the device output turns off (goes high). The xPHx is complementary, in that for the device, a north or south polarity field exceeding the operate points, B_{OPS} or B_{OPN}, will turn the output off (high). Removal of the field, or reduction below the release point threshold, B_{RPS} or B_{RPN}, will turn the output on (low). See Figure 3 for omnipolar switching behavior.

After turn-on, the output transistor is capable of sinking current up to the short circuit current limit, I_{OM}, which is a minimum of 15 mA. The difference in the magnetic operate and release points is the hysteresis, B_{HYS}, of the device. This built-in hysteresis allows clean switching of the output even in the presence of external mechanical vibration and electrical noise.

ALLEGRO microsystems

Allegro MicroSystems
955 Perimeter Road
Manchester, NH 03103-3353 U.S.A.
www.allegromicro.com

Applications

It is strongly recommended that an external bypass capacitor be connected (in close proximity to the Hall element) between the supply and ground of the device to guarantee correct performance under harsh environmental conditions and to reduce noise from internal circuitry. As is shown in Figure 7: Typical and Enhanced Protection Application Circuits, a 0.1 µF capacitor is required.

In applications where the APS11700 or APS11760 receives its power from an unregulated source such as a car battery, or where greater immunity is required, additional measures may be employed. Specifications for such transients will vary, so protection circuit design should be optimized for each application. For example, the circuit shown in Figure 7 includes an optional series resistor and output capacitor which improves performance during Powered ESD testing (ISO 10605), Conducted Immunity (ISO 7637-2 and ISO 16750-2), and Bulk Current Injection testing (ISO 11452-4).

Typical Applications Circuit

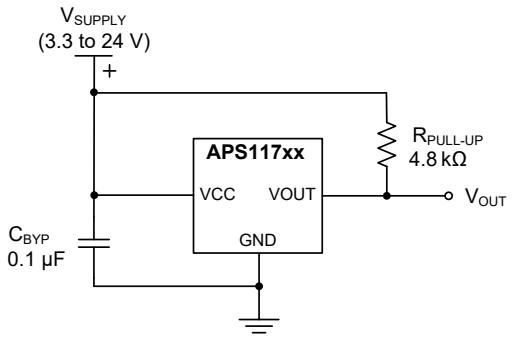

Enhanced Protection Circuit

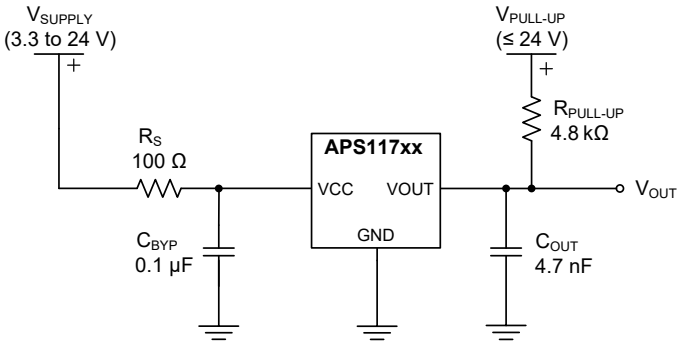

Figure 7: Typical and Enhanced Protection Application Circuits

Recommended $R_{PULL-UP} \leq 20$ kΩ.
See Power-On Behavior section.

Extensive applications information for Hall-effect devices is available in:

- *Hall-Effect IC Applications Guide, AN27701,*
- *Hall-Effect Devices: Guidelines for Designing Subassemblies Using Hall-Effect Devices AN27703.1*
- *Soldering Methods for Allegro's Products – SMD and Through-Hole, AN26009*

All are provided on the Allegro website:

www.allegromicro.com

Vertical Hall-Effect Sensor Linear Tools

System design and magnetic sensor evaluation often require an in-depth look at the overall strength and profile generated by a magnetic field input. To aid in this evaluation, Allegro MicroSystems provides a high-accuracy linear output tool capable of reporting the non-perpendicular magnetic field by means of an vertical Hall-effect sensor IC equipped with a calibrated analog output. For further information, contact your local Allegro field applications engineer or sales representative.

Allegro MicroSystems
955 Perimeter Road
Manchester, NH 03103-3353 U.S.A.
www.allegromicro.com

CHOPPER STABILIZATION

A limiting factor for switchpoint accuracy when using Hall-effect technology is the small signal voltage developed across the Hall plate. This voltage is proportionally small relative to the offset that can be produced at the output of the Hall sensor. This makes it difficult to process the signal and maintain an accurate, reliable output over the specified temperature and voltage range. Chopper stabilization is a proven approach used to minimize Hall offset.

The technique, dynamic quadrature offset cancellation, removes key sources of the output drift induced by temperature and package stress. This offset reduction technique is based on a signal modulation-demodulation process. Figure 8: Model of Chopper Stabilization Circuit (Dynamic Offset Cancellation) illustrates how it is implemented.

The undesired offset signal is separated from the magnetically induced signal in the frequency domain through modulation. The subsequent demodulation acts as a modulation process for the offset causing the magnetically induced signal to recover its original spectrum at baseband while the DC offset becomes a high-frequency signal. Then, using a low-pass filter, the signal passes while the modulated DC offset is suppressed. Allegro's innovative chopper-stabilization technique uses a high-frequency clock.

The high-frequency operation allows a greater sampling rate that produces higher accuracy, reduced jitter, and faster signal processing. Additionally, filtering is more effective and results in a lower noise analog signal at the sensor output. Devices such as the APS11700 and APS11760 that use this approach have an extremely stable quiescent Hall output voltage, are immune to thermal stress, and have precise recoverability after temperature cycling. This technique is made possible through the use of a BiCMOS process which allows the use of low offset and low noise amplifiers in combination with high-density logic and sample-and-hold circuits.

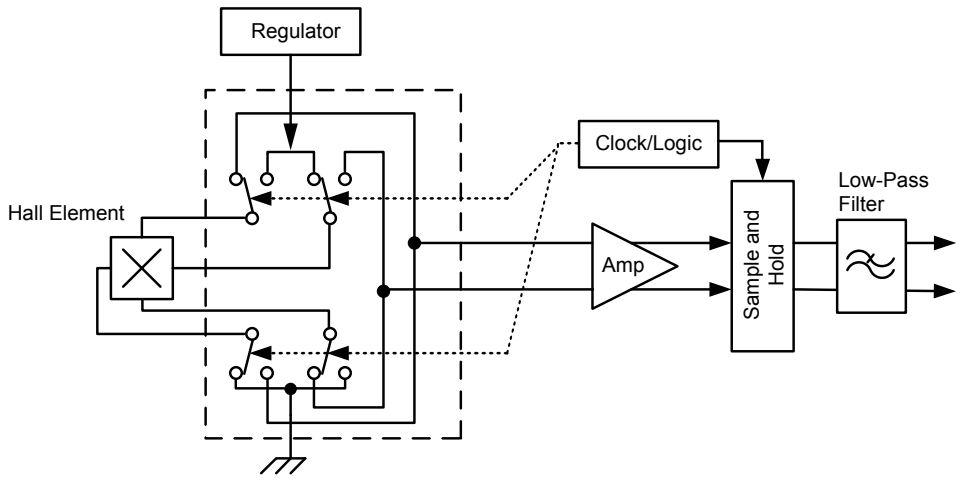

Figure 8: Model of Chopper Stabilization Circuit (Dynamic Offset Cancellation)

Allegro MicroSystems
955 Perimeter Road
Manchester, NH 03103-3353 U.S.A.
www.allegromicro.com

Package LH, 3-Pin SMD (SOT23W)

APS11700

For Reference Only – Not for Tooling Use

(Reference Allegro DWG-0000628, Rev. 1)
NOT TO SCALE
Dimensions in millimeters
Dimensions exclusive of mold flash, gate burrs, and dambar protrusions
Exact case and lead configuration at supplier discretion within limits shown

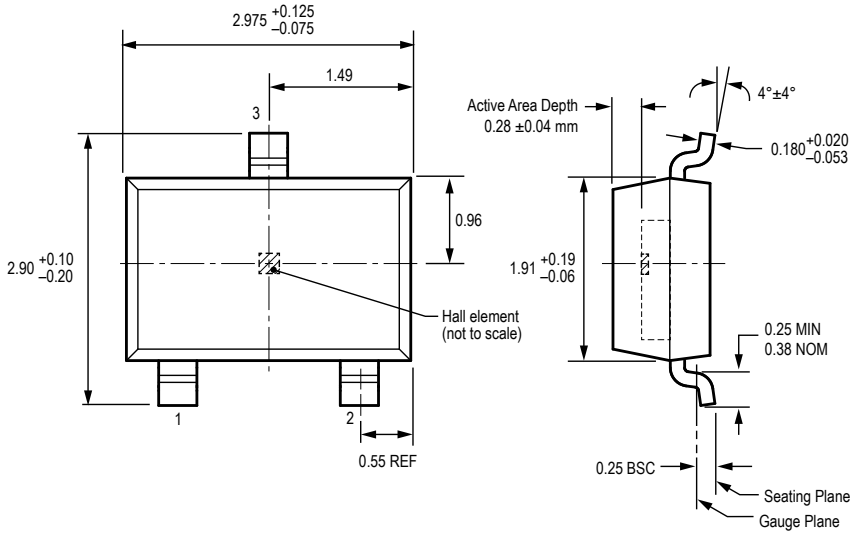

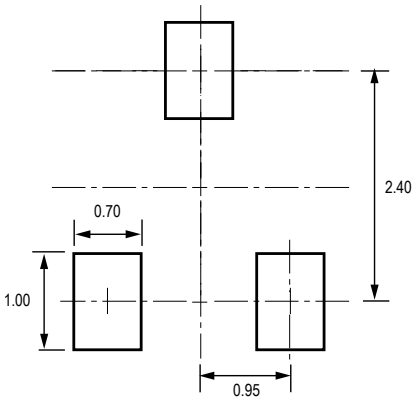

PCB Layout Reference View

All pads a minimum of 0.20 mm from all adjacent pads; adjust as necessary to meet application process requirements and PCB layout tolerances

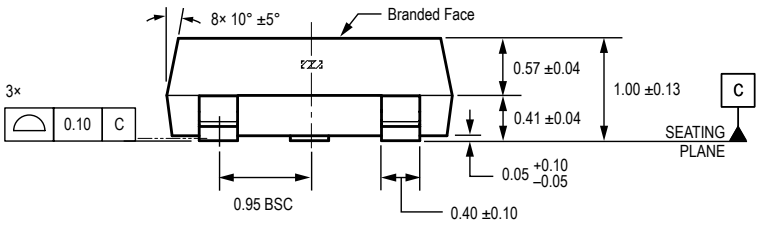

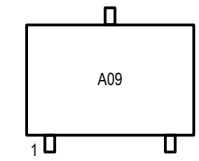

Standard Branding Reference View

Allegro MicroSystems
955 Perimeter Road
Manchester, NH 03103-3353 U.S.A.
www.allegromicro.com

Package UA, 3-Pin SIP
APS11700

For Reference Only – Not For Tooling Use

(Reference DWG-0000404, Rev. 1)
NOT TO SCALE
Dimensions in millimeters
Exact case and lead configuration at supplier discretion within limits shown

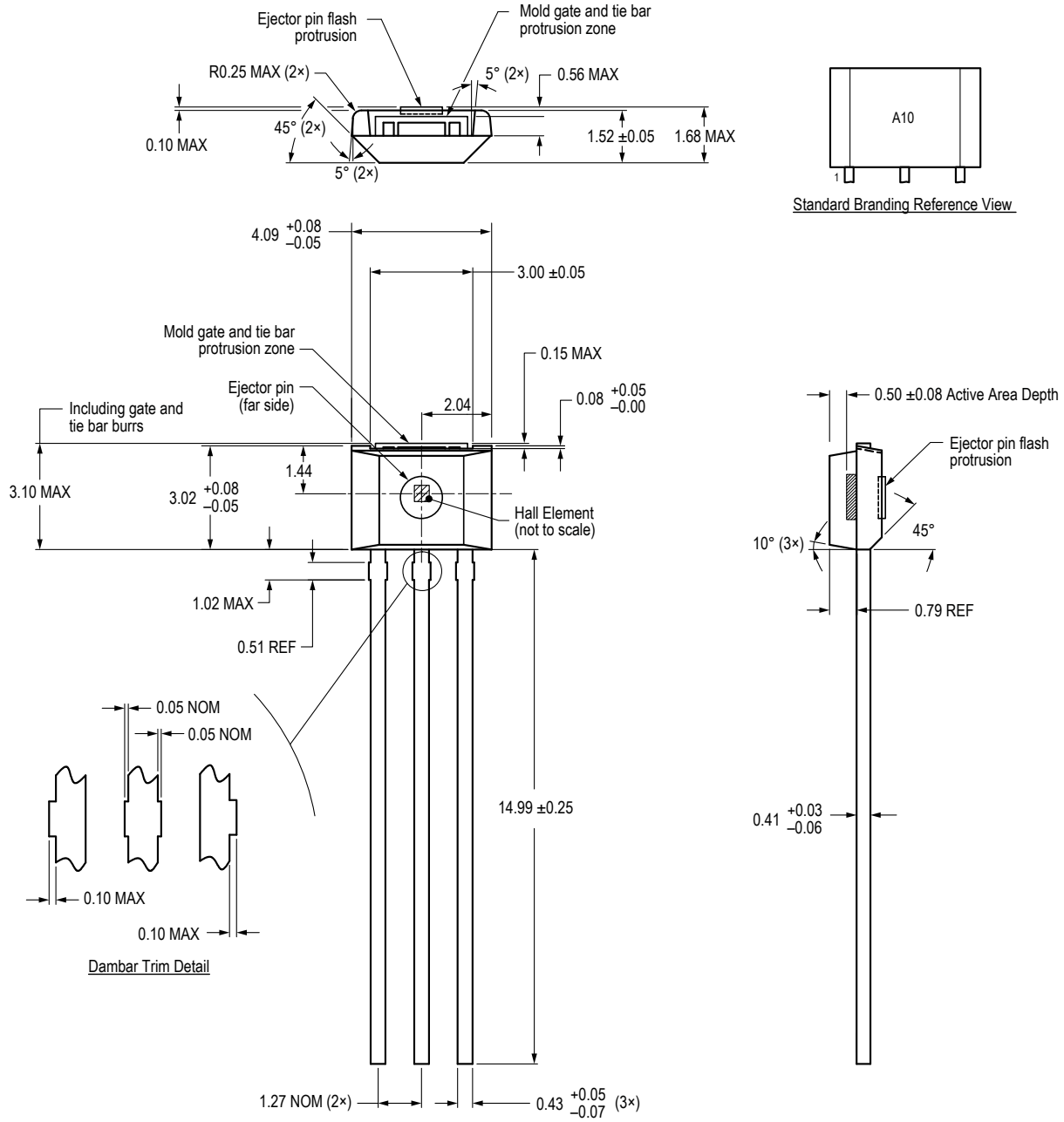

Allegro MicroSystems
955 Perimeter Road
Manchester, NH 03103-3353 U.S.A.
www.allegromicro.com

Package LH, 3-Pin SMD (SOT23W)
APS11760

For Reference Only – Not for Tooling Use

(Reference Allegro DWG-0000628, Rev. 1)
NOT TO SCALE
Dimensions in millimeters
Dimensions exclusive of mold flash, gate burrs, and dambar protrusions
Exact case and lead configuration at supplier discretion within limits shown

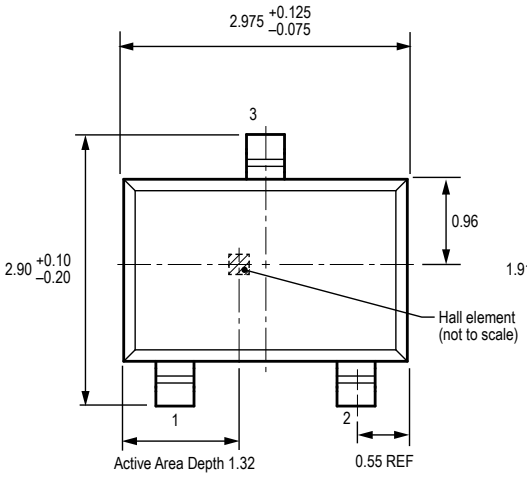

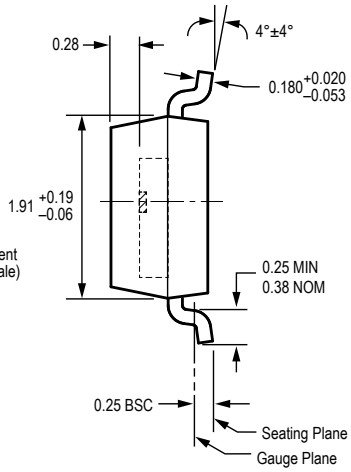

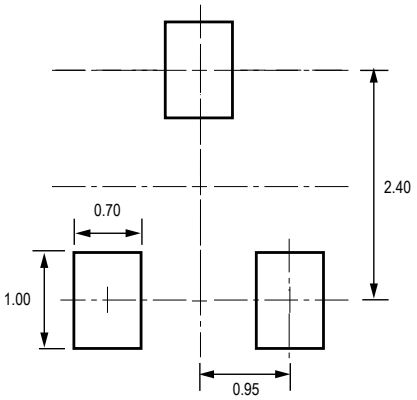

PCB Layout Reference View

All pads a minimum of 0.20 mm from all adjacent pads; adjust as necessary to meet application process requirements and PCB layout tolerances

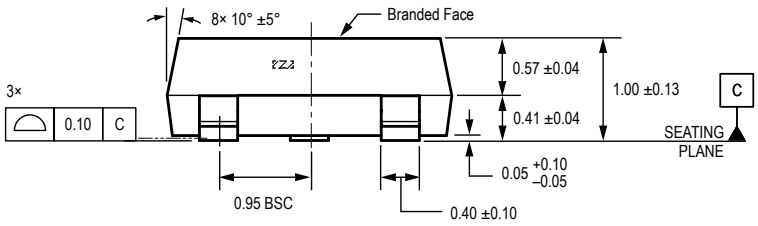

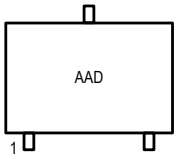

Standard Branding Reference View

Allegro MicroSystems
955 Perimeter Road
Manchester, NH 03103-3353 U.S.A.
www.allegromicro.com

Package UA, 3-Pin SIP
APS11760

For Reference Only – Not For Tooling Use

(Reference DWG-0000404, Rev. 1)
NOT TO SCALE
Dimensions in millimeters
Exact case and lead configuration at supplier discretion within limits shown

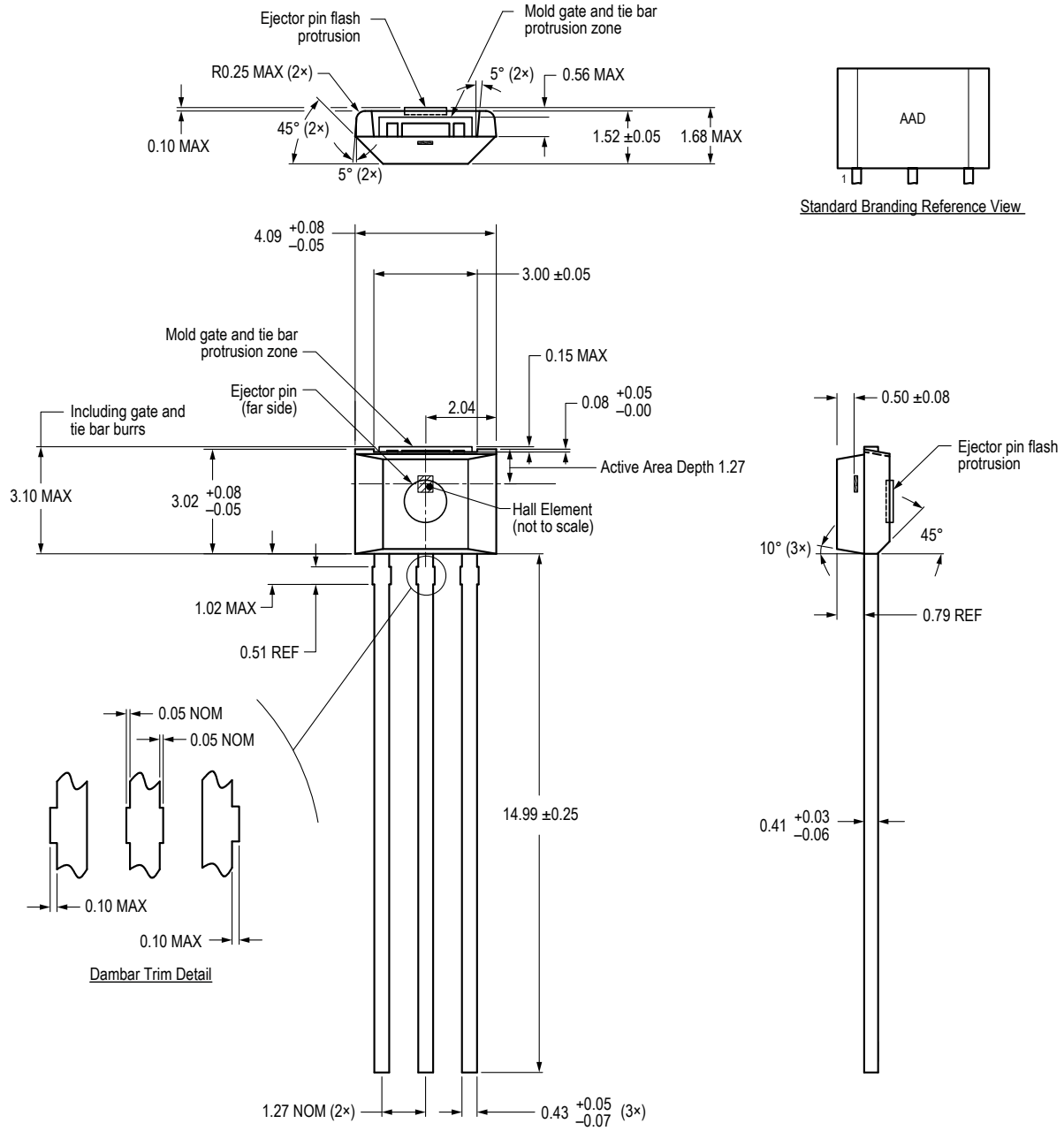

Allegro MicroSystems
955 Perimeter Road
Manchester, NH 03103-3353 U.S.A.
www.allegromicro.com

Revision History

Number	Date	Description
–	November 1, 2018	Initial release
1	November 26, 2018	Updated footnote (page 4) and Figure 7 (page 16)
2	February 11, 2019	Updated Selection Guide (page 3) and ESD Performance table (page 4); added Magnetic Characteristics -1xx and -2xx plots (pages 13-14)
3	June 17, 2019	Added footnote 3 to Magnetic Characteristics table (pages 8-9); updated Functional Safety section (page 16).
4	April 27, 2020	Added -0SL1 part variants (pages 2-3, 6); updated plots (page 11) and ASIL A verbiage (pages 1, 16)
5	June 7, 2022	Updated package drawings (pages 20-23)

Copyright 2022, Allegro MicroSystems.
Allegro MicroSystems reserves the right to make, from time to time, such departures from the detail specifications as may be required to permit improvements in the performance, reliability, or manufacturability of its products. Before placing an order, the user is cautioned to verify that the information being relied upon is current.
Allegro's products are not to be used in any devices or systems, including but not limited to life support devices or systems, in which a failure of Allegro's product can reasonably be expected to cause bodily harm.
The information included herein is believed to be accurate and reliable. However, Allegro MicroSystems assumes no responsibility for its use; nor for any infringement of patents or other rights of third parties which may result from its use.
Copies of this document are considered uncontrolled documents.

For the latest version of this document, visit our website:
www.allegromicro.com

Allegro MicroSystems
955 Perimeter Road
Manchester, NH 03103-3353 U.S.A.
www.allegromicro.com