AT25DF256

256-Kbit, 1.65V Minimum
SPI Serial Flash Memory with Dual-Read Support

Features

- Single 1.65V - 3.6V Supply
- Serial Peripheral Interface (SPI) Compatible
  - Supports SPI Modes 0 and 3
  - Supports Dual Output Read
- 104MHz Maximum Operating Frequency
  - Clock-to-Output (t_V) of 6 ns
- Flexible, Optimized Erase Architecture for Code + Data Storage Applications
  - Small (256-Byte) Page Erase
  - Uniform 4-Kbyte Block Erase
  - Uniform 32-Kbyte Block Erase
  - Full Chip Erase
- Hardware Controlled Locking of Protected Sectors via $\overline{WP}$ Pin
- 128-byte, One-Time Programmable (OTP) Security Register
  - 64 bytes factory programmed with a unique identifier
  - 64 bytes user programmable
- Flexible Programming
  - Byte/Page Program (1 to 256 Bytes)
- Fast Program and Erase Times
  - 1.5ms Typical Page Program (256 Bytes) Time
  - 50ms Typical 4-Kbyte Block Erase Time
  - 350ms Typical 32-Kbyte Block Erase Time
- Automatic Checking and Reporting of Erase/Program Failures
- Software Controlled Reset
- JEDEC Standard Manufacturer and Device ID Read Methodology
- Low Power Dissipation
  - 200nA Ultra Deep Power Down current (Typical)
  - 5µA Deep Power-Down Current (Typical)
  - 25uA Standby current (Typical)
  - 4.5mA Active Read Current (Typical)
- Endurance: 100,000 Program/Erase Cycles
- Data Retention: 20 Years
- Temperature Range:-10°C to +85°C (1.65V to 3.6V), -40°C to +85° (1.7V to 3.6V)
- Industry Standard Green (Pb/Halide-free/RoHS Compliant) Package Options
  - 8-lead SOIC (150-mil)
  - 8-pad Ultra Thin DFN (2 x 3 x 0.6 mm)
  - 8-lead TSSOP Package

1. Description

The Adesto® AT25DF256 is a serial interface Flash memory device designed for use in a wide variety of high-volume consumer based applications in which program code is shadowed from Flash memory into embedded or external RAM for execution. The flexible erase architecture of the AT25DF256, with its page erase granularity it is ideal for data storage as well, eliminating the need for additional data storage devices.

The erase block sizes of the AT25DF256 have been optimized to meet the needs of today's code and data storage applications. By optimizing the size of the erase blocks, the memory space can be used much more efficiently. Because certain code modules and data storage segments must reside by themselves in their own erase regions, the wasted and unused memory space that occurs with large sectored and large block erase Flash memory devices can be greatly reduced. This increased memory space efficiency allows additional code routines and data storage segments to be added while still maintaining the same overall device density.

The device also contains a specialized OTP (One-Time Programmable) Security Register that can be used for purposes such as unique device serialization, system-level Electronic Serial Number (ESN) storage, locked key storage, etc.

Specifically designed for use in many different systems, the AT25DF256 supports read, program, and erase operations with a wide supply voltage range of 1.65V to 3.6V. No separate voltage is required for programming and erasing.

2. Pin Descriptions and Pinouts

Table 2-1. Pin Descriptions

Symbol	Name and Function	Asserted State	Type
$\overline{CS}$	**CHIP SELECT:** Asserting the $\overline{CS}$ pin selects the device. When the $\overline{CS}$ pin is deasserted, the device will be deselected and normally be placed in standby mode (not Deep Power-Down mode), and the SO pin will be in a high-impedance state. When the device is deselected, data will not be accepted on the SI pin. A high-to-low transition on the $\overline{CS}$ pin is required to start an operation, and a low-to-high transition is required to end an operation. When ending an internally self-timed operation such as a program or erase cycle, the device will not enter the standby mode until the completion of the operation.	Low	Input
SCK	**SERIAL CLOCK:** This pin is used to provide a clock to the device and is used to control the flow of data to and from the device. Command, address, and input data present on the SI pin is always latched in on the rising edge of SCK, while output data on the SO pin is always clocked out on the falling edge of SCK.	-	Input
SI (I/O_0)	**SERIAL INPUT:** The SI pin is used to shift data into the device. The SI pin is used for all data input including command and address sequences. Data on the SI pin is always latched in on the rising edge of SCK. With the Dual-Output Read commands, the SI Pin becomes an output pin (I/O_0) in conjunction with other pins to allow two bits of data on (I/O_{1-0}) to be clocked out on every falling edge of SCK. To maintain consistency with the SPI nomenclature, the SI (I/O_0) pin will be referenced as the SI pin unless specifically addressing the Dual-I/O modes in which case it will be referenced as I/O_0. Data present on the SI pin will be ignored whenever the device is deselected ($\overline{CS}$ is deasserted).	-	Input/Output

Table 2-1. Pin Descriptions (Continued)

Symbol	Name and Function	Asserted State	Type
SO (I/O_1)	**SERIAL OUTPUT:** The SO pin is used to shift data out from the device. Data on the SO pin is always clocked out on the falling edge of SCK. With the Dual-Output Read commands, the SO Pin remains an output pin (I/O_1) in conjunction with other pins to allow two bits of data on (I/O_{1-0}) to be clocked out on every falling edge of SCK. To maintain consistency with the SPI nomenclature, the SO (I/O_1) pin will be referenced as the SO pin unless specifically addressing the Dual-I/O modes in which case it will be referenced as I/O_1. The SO pin will be in a high-impedance state whenever the device is deselected ($\overline{CS}$ is deasserted).	-	Input/Output
$\overline{WP}$	**WRITE PROTECT:** The $\overline{WP}$ pin controls the hardware locking feature of the device. Please refer to "Protection Commands and Features" on page 12 for more details on protection features and the $\overline{WP}$ pin. The $\overline{WP}$ pin is internally pulled-high and may be left floating if hardware controlled protection will not be used. However, it is recommended that the $\overline{WP}$ pin also be externally connected to V_{CC} whenever possible.	Low	Input
$\overline{HOLD}$	**HOLD:** The $\overline{HOLD}$ pin is used to temporarily pause serial communication without deselecting or resetting the device. While the $\overline{HOLD}$ pin is asserted, transitions on the SCK pin and data on the SI pin will be ignored, and the SO pin will be in a high-impedance state. The $\overline{CS}$ pin must be asserted, and the SCK pin must be in the low state in order for a Hold condition to start. A Hold condition pauses serial communication only and does not have an effect on internally self-timed operations such as a program or erase cycle. Please refer to "Hold" on page 27 for additional details on the Hold operation. The $\overline{HOLD}$ pin is internally pulled-high and may be left floating if the Hold function will not be used. However, it is recommended that the $\overline{HOLD}$ pin also be externally connected to V_{CC} whenever possible.	Low	Input
V_{CC}	**DEVICE POWER SUPPLY:** The V_{CC} pin is used to supply the source voltage to the device. Operations at invalid V_{CC} voltages may produce spurious results and should not be attempted.	-	Power
GND	**GROUND:** The ground reference for the power supply. GND should be connected to the system ground.	-	Power

Table 2-2.

Figure 2-1. 8-SOIC Top View

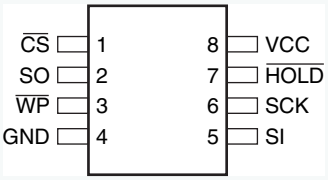

Figure 2-2. 8-TSSOP Top View

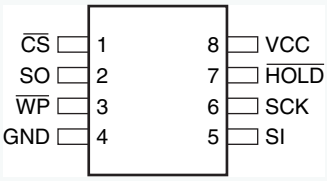

Figure 2-3. 8-UDFN (Top View)

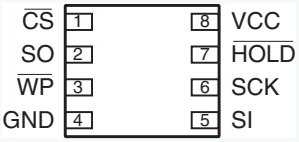

3. Block Diagram

Figure 3-1. Block Diagram

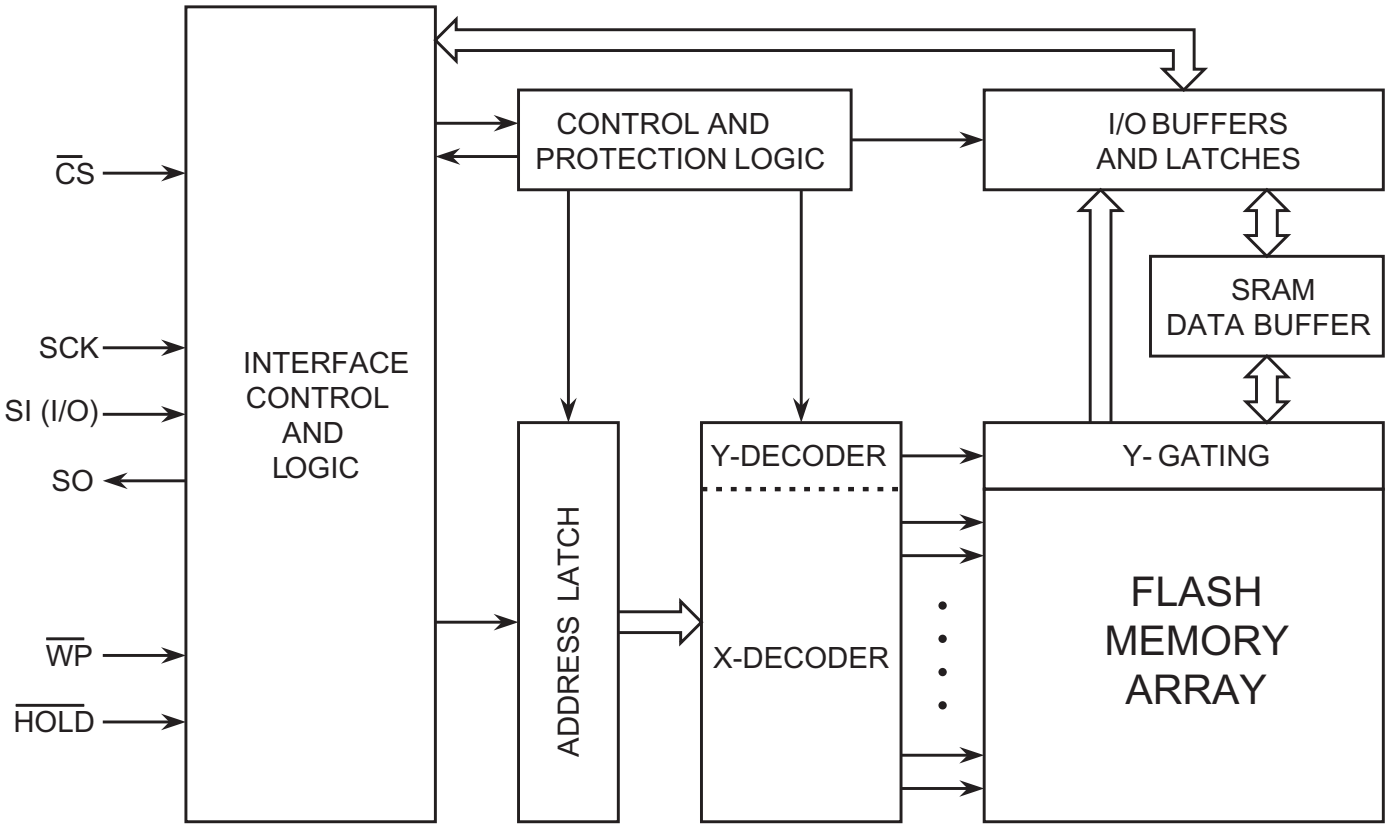

4. Memory Array

To provide the greatest flexibility, the memory array of the AT25DF256 can be erased in three levels of granularity including a full chip erase. The size of the erase blocks is optimized for both code and data storage applications, allowing both code and data segments to reside in their own erase regions. The Memory Architecture Diagram illustrates the breakdown of each erase level.

Figure 4-1. Memory Architecture Diagram

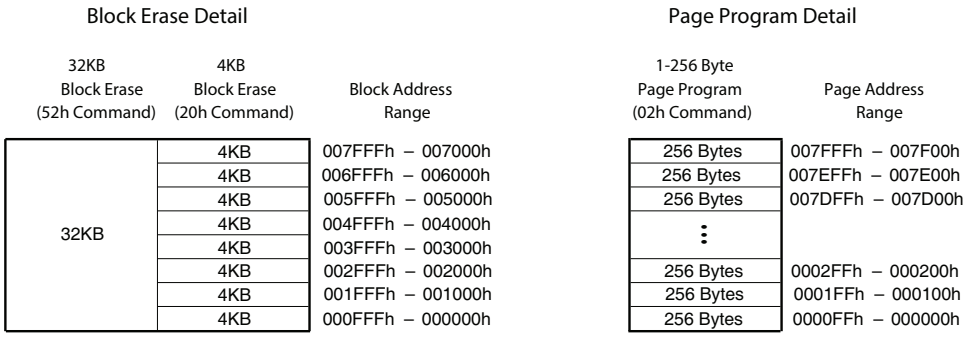

5. Device Operation

The AT25DF256 is controlled by a set of instructions that are sent from a host controller, commonly referred to as the SPI Master. The SPI Master communicates with the AT25DF256 via the SPI bus which is comprised of four signal lines: Chip Select ($\overline{CS}$), Serial Clock (SCK), Serial Input (SI), and Serial Output (SO).

The SPI protocol defines a total of four modes of operation (mode 0, 1, 2, or 3) with each mode differing in respect to the SCK polarity and phase and how the polarity and phase control the flow of data on the SPI bus. The AT25DF256 supports the two most common modes, SPI Modes 0 and 3. The only difference between SPI Modes 0 and 3 is the polarity of the SCK signal when in the inactive state (when the SPI Master is in standby mode and not transferring any data). With SPI Modes 0 and 3, data is always latched in on the rising edge of SCK and always output on the falling edge of SCK.

Figure 5-1. SPI Mode 0 and 3

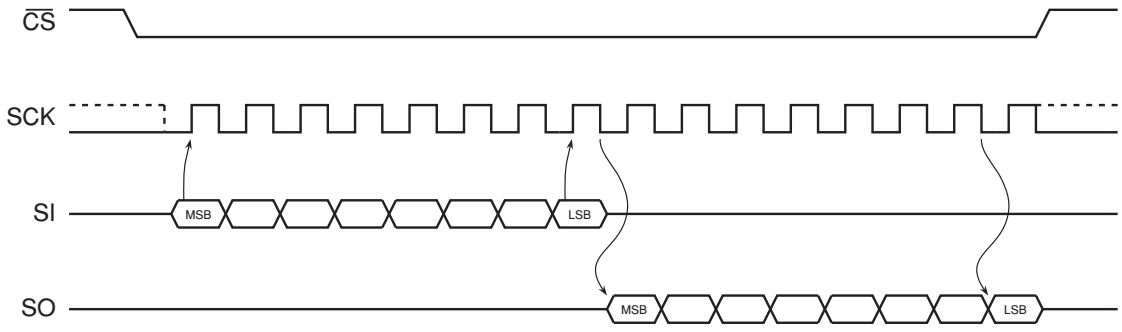

5.1 Dual Output Read

The ATx features a Dual-Output Read mode that allow two bits of data to be clocked out of the device every clock cycle to improve throughput. To accomplish this, both the SI and SO pins are utilized as outputs for the transfer of data bytes. With the Dual-Output Read Array command, the SI pin becomes an output along with the SO pin.

6. Commands and Addressing

A valid instruction or operation must always be started by first asserting the $\overline{CS}$ pin. After the $\overline{CS}$ pin has been asserted, the host controller must then clock out a valid 8-bit opcode on the SPI bus. Following the opcode, instruction dependent information such as address and data bytes would then be clocked out by the host controller. All opcode, address, and data bytes are transferred with the most-significant bit (MSB) first. An operation is ended by deasserting the $\overline{CS}$ pin.

Opcodes not supported by the AT25DF256 will be ignored by the device and no operation will be started. The device will continue to ignore any data presented on the SI pin until the start of the next operation ($\overline{CS}$ pin being deasserted and then reasserted). In addition, if the $\overline{CS}$ pin is deasserted before complete opcode and address information is sent to the device, then no operation will be performed and the device will simply return to the idle state and wait for the next operation.

Addressing of the device requires a total of three bytes of information to be sent, representing address bits A23-A0. Since the upper address limit of the AT25DF256 memory array is 007FFFh, address bits A23-A15 are always ignored by the device.

Table 6-1. Command Listing

Command	Opcode		Clock Frequency	Address Bytes	Dummy Bytes	Data Bytes
Read Commands						
Read Array	0Bh	0000 1011	Up to 104 MHz	3	1	1+
	03h	0000 0011	Up to 33 MHz	3	0	1+
Dual Output Read	3Bh	0011 1011	Up to 50 MHz	3	1	1+
Program and Erase Commands						
Page Erase	81h	1000 0001	Up to 104 MHz	3	0	0
Block Erase (4 Kbytes)	20h	0010 0000	Up to 104 MHz	3	0	0
Block Erase (32 Kbytes)	52h	0101 0010	Up to 104 MHz	3	0	0
	D8h	1101 1000	Up to 104 MHz	3	0	0
Chip Erase	60h	0110 0000	Up to 104 MHz	0	0	0
	C7h	1100 0111	Up to 104 MHz	0	0	0
Chip Erase (Legacy Command)	62h	0110 0010	Up to 104 MHz	0	0	0
Byte/Page Program (1 to 256 Bytes)	02h	0000 0010	Up to 104 MHz	3	0	1+
Protection Commands						
Write Enable	06h	0000 0110	Up to 104 MHz	0	0	0
Write Disable	04h	0000 0100	Up to 104 MHz	0	0	0
Security Commands						
Program OTP Security Register	9Bh	1001 1011	Up to 104 MHz	3	0	1+
Read OTP Security Register	77h	0111 0111	Up to 104 MHz	3	2	1+
Status Register Commands						
Read Status Register	05h	0000 0101	Up to 104 MHz	0	0	1+
Write Status Register Byte 1	01h	0000 0001	Up to 104 MHz	0	0	1

Table 6-1. Command Listing

Command	Opcode		Clock Frequency	Address Bytes	Dummy Bytes	Data Bytes
Write Status Register Byte 2	31h	0011 0001	Up to 104 MHz	0	0	1
Miscellaneous Commands						
Reset	F0h	1111 0000	Up to 104 MHz	0	0	1 (D0h)
Read Manufacturer and Device ID	9Fh	1001 1111	Up to 104 MHz	0	0	1 to 4
Read ID (Legacy Command)	15h	0001 0101	Up to 104 MHz	0	0	2
Deep Power-Down	B9h	1011 1001	Up to 104 MHz	0	0	0
Resume from Deep Power-Down	ABh	1010 1011	Up to 104 MHz	0	0	0
Ultra Deep Power-Down	79h	0111 1001	Up to 104 MHz	0	0	0

7. Read Commands

7.1 Read Array

The Read Array command can be used to sequentially read a continuous stream of data from the device by simply providing the clock signal once the initial starting address is specified. The device incorporates an internal address counter that automatically increments every clock cycle.

Two opcodes (0Bh and 03h) can be used for the Read Array command. The use of each opcode depends on the maximum clock frequency that will be used to read data from the device. The 0Bh opcode can be used at any clock frequency up to the maximum specified by f_{CLK}, and the 03h opcode can be used for lower frequency read operations up to the maximum specified by f_{RDLF}.

To perform the Read Array operation, the $\overline{CS}$ pin must first be asserted and the appropriate opcode (0Bh or 03h) must be clocked into the device. After the opcode has been clocked in, the three address bytes must be clocked in to specify the starting address location of the first byte to read within the memory array. Following the three address bytes, an additional dummy byte needs to be clocked into the device if the 0Bh opcode is used for the Read Array operation.

After the three address bytes (and the dummy byte if using opcode 0Bh) have been clocked in, additional clock cycles will result in data being output on the SO pin. The data is always output with the MSB of a byte first. When the last byte (007FFFh) of the memory array has been read, the device will continue reading back at the beginning of the array (000000h). No delays will be incurred when wrapping around from the end of the array to the beginning of the array.

Deasserting the $\overline{CS}$ pin will terminate the read operation and put the SO pin into high-impedance state. The $\overline{CS}$ pin can be deasserted at any time and does not require a full byte of data be read.

Figure 7-1. Read Array - 03h Opcode

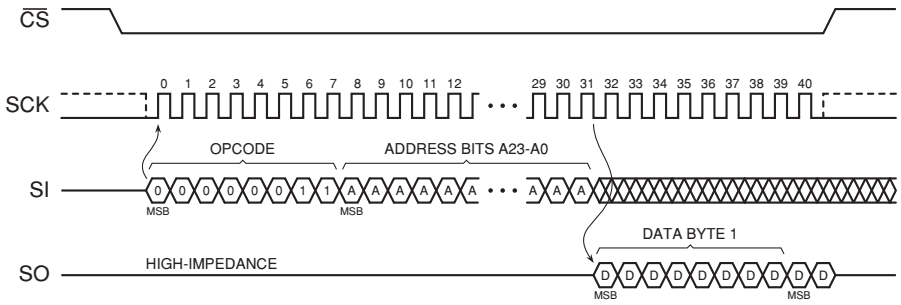

Figure 7-2. Read Array - 0Bh Opcode

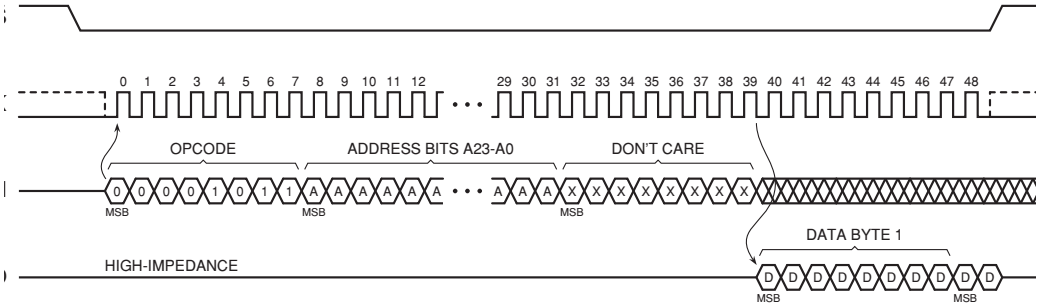

7.2 Dual-Output Read Array

The Dual-Output Read Array command is similar to the standard Read Array command and can be used to sequentially read a continuous stream of data from the device by simply providing the clock signal once the initial starting address has been specified. Unlike the standard Read Array command, however, the Dual-Output Read Array command allows two bits of data to be clocked out of the device on every clock cycle, rather than just one.

The Dual-Output Read Array command can be used at any clock frequency, up to the maximum specified by f_{RDDO}. To perform the Dual-Output Read Array operation, the $\overline{CS}$ pin must first be asserted and then the opcode 3Bh must be clocked into the device. After the opcode has been clocked in, the three address bytes must be clocked in to specify the location of the first byte to read within the memory array. Following the three address bytes, a single dummy byte must also be clocked into the device.

After the three address bytes and the dummy byte have been clocked in, additional clock cycles will result in data being output on both the SO and SIO pins. The data is always output with the MSB of a byte first and the MSB is always output on the SO pin. During the first clock cycle, bit seven of the first data byte is output on the SO pin, while bit six of the same data byte is output on the SIO pin. During the next clock cycle, bits five and four of the first data byte are output on the SO and SIO pins, respectively. The sequence continues with each byte of data being output after every four clock cycles. When the last byte (007FFFh) of the memory array has been read, the device will continue reading from the beginning of the array (000000h). No delays will be incurred when wrapping around from the end of the array to the beginning of the array.Deasserting the $\overline{CS}$ pin will terminate the read operation and put the SO and SIO pins into a high-impedance state. The $\overline{CS}$ pin can be deasserted at any time and does not require that a full byte of data be read.

Figure 7-3. Dual-Output Read Array

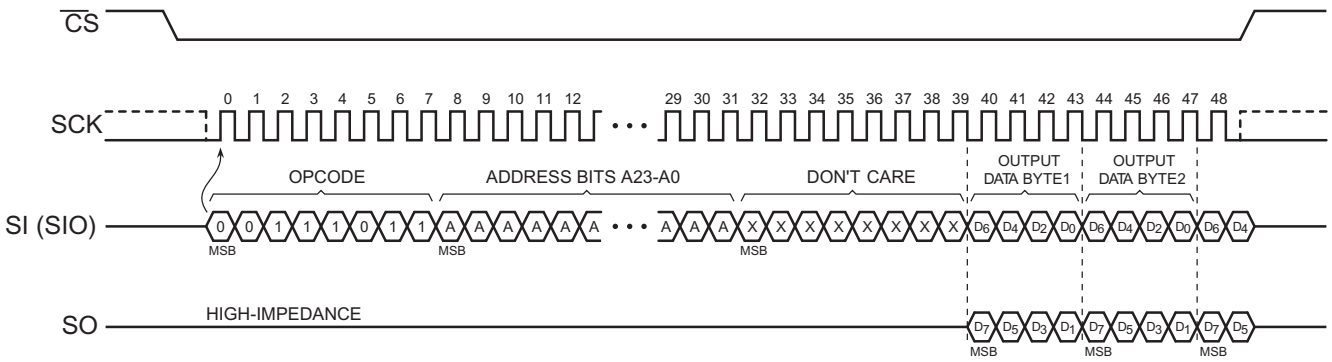

8. Program and Erase Commands

8.1 Byte/Page Program

The Byte/Page Program command allows anywhere from a single byte of data to 256 bytes of data to be programmed into previously erased memory locations. An erased memory location is one that has all eight bits set to the logical “1” state (a byte value of FFh). Before a Byte/Page Program command can be started, the Write Enable command must have been previously issued to the device (see “Write Enable” on page 12) to set the Write Enable Latch (WEL) bit of the Status Register to a logical “1” state.

To perform a Byte/Page Program command, an opcode of 02h must be clocked into the device followed by the three address bytes denoting the first byte location of the memory array to begin programming at. After the address bytes have been clocked in, data can then be clocked into the device and will be stored in an internal buffer.

If the starting memory address denoted by A23-A0 does not fall on an even 256-byte page boundary (A7-A0 are not all 0), then special circumstances regarding which memory locations to be programmed will apply. In this situation, any data that is sent to the device that goes beyond the end of the page will wrap around back to the beginning of the same page. For example, if the starting address denoted by A23-A0 is 0000FEh, and three bytes of data are sent to the device, then the first two bytes of data will be programmed at addresses 0000FEh and 0000FFh while the last byte of data will be programmed at address 000000h. The remaining bytes in the page (addresses 000001h through 0000FDh) will not be programmed and will remain in the erased state (FFh). In addition, if more than 256 bytes of data are sent to the device, then only the last 256 bytes sent will be latched into the internal buffer.

When the $\overline{CS}$ pin is deasserted, the device will take the data stored in the internal buffer and program it into the appropriate memory array locations based on the starting address specified by A23-A0 and the number of data bytes sent to the device. If less than 256 bytes of data were sent to the device, then the remaining bytes within the page will not be programmed and will remain in the erased state (FFh). The programming of the data bytes is internally self-timed and should take place in a time of t_{PP} or t_{BP} if only programming a single byte.

The three address bytes and at least one complete byte of data must be clocked into the device before the $\overline{CS}$ pin is deasserted, and the $\overline{CS}$ pin must be deasserted on even byte boundaries (multiples of eight bits); otherwise, the device will abort the operation and no data will be programmed into the memory array. In addition, if the memory is in the protected state (see “Block Protection” on page 13), then the Byte/Page Program command will not be executed, and the device will return to the idle state once the $\overline{CS}$ pin has been deasserted. The WEL bit in the Status Register will be reset back to the logical “0” state if the program cycle aborts due to an incomplete address being sent, an incomplete byte of data being sent, the $\overline{CS}$ pin being deasserted on uneven byte boundaries, or because the memory location to be programmed is protected.

While the device is programming, the Status Register can be read and will indicate that the device is busy. For faster throughput, it is recommended that the Status Register be polled rather than waiting the t_{BP} or t_{PP} time to determine if the data bytes have finished programming. At some point before the program cycle completes, the WEL bit in the Status Register will be reset back to the logical “0” state.

The device also incorporates an intelligent programming algorithm that can detect when a byte location fails to program properly. If a programming error arises, it will be indicated by the EPE bit in the Status Register.

Figure 8-1. Byte Program

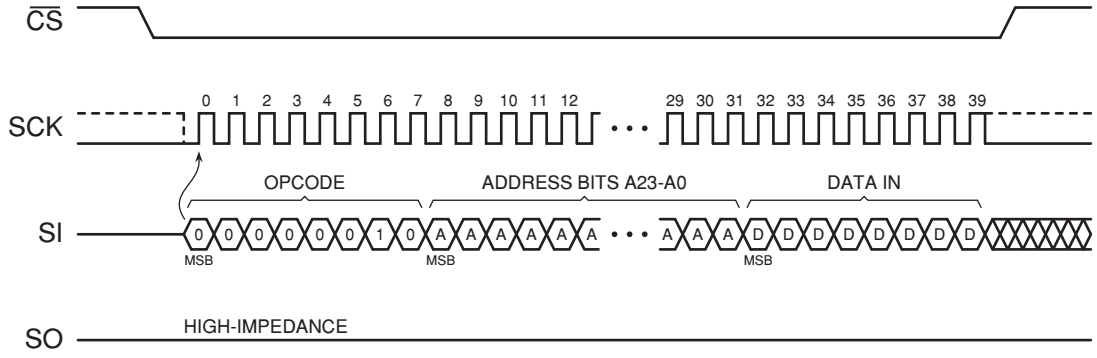

Figure 8-2. Page Program

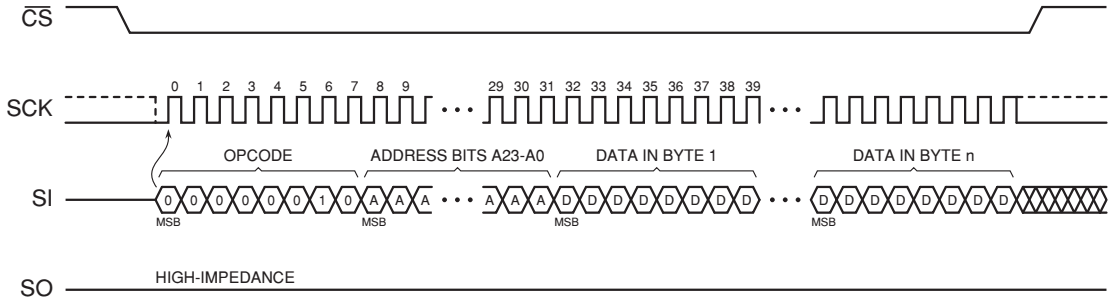

8.2 Page Erase

Page Erase for 256Kbit, 128 Pages [seven (7) page address bits, PA<6:0>] of 256Bytes each.

The Page Erase command can be used to individually erase any page in the main memory array. The Main Memory Byte/Page Program command can be utilized at a later time.

To perform a Page Erase with the standard page size (256 bytes), an opcode of 81h must be clocked into the device followed by three address bytes comprised of:

Byte 0: 81h the page erase command code

Byte 1: XXXX XXXX; which is eight (8) dummy bits

Byte 2: X, PA<6:0>; which is one dummy bit X, and seven (7) page address bits PA<6:0>

Byte 3: XXXX XXXX; which is eight (8) dummy bits

When a low-to-high transition occurs on the $\overline{CS}$ pin, the device will erase the selected page (the erased state is a Logic 1). The erase operation is internally self-timed and should take place in a maximum time of t_{PE}. During this time, the $\overline{RDY}$/BUSY bit in the Status Register will indicate that the device is busy.

The device also incorporates an intelligent erase algorithm that can detect when a byte location fails to erase properly. If an erase error arises, it will be indicated by the EPE bit in the Status Register.

8.3 Block Erase

A block of 4 or 32 Kbytes can be erased (all bits set to the logical “1” state) in a single operation by using one of three different opcodes for the Block Erase command. An opcode of 20h is used for a 4-Kbyte erase, and an opcode of 52h or D8h is used for a 32-Kbyte erase. Before a Block Erase command can be started, the Write Enable command must have been previously issued to the device to set the WEL bit of the Status Register to a logical “1” state.

To perform a Block Erase, the $\overline{CS}$ pin must first be asserted and the appropriate opcode (20h, 52h, or D8h) must be clocked into the device. After the opcode has been clocked in, the three address bytes specifying an address within the 4- or 32-Kbyte block to be erased must be clocked in. Any additional data clocked into the device will be ignored. When the $\overline{CS}$ pin is deasserted, the device will erase the appropriate block. The erasing of the block is internally self-timed and should take place in a time of t_{BLKE}.

Since the Block Erase command erases a region of bytes, the lower order address bits do not need to be decoded by the device. Therefore, for a 4-Kbyte erase, address bits A11-A0 will be ignored by the device and their values can be either a logical “1” or “0”. For a 32-Kbyte erase, address bits A14-A0 will be ignored by the device. Despite the lower order address bits not being decoded by the device, the complete three address bytes must still be clocked into the device before the $\overline{CS}$ pin is deasserted, and the $\overline{CS}$ pin must be deasserted on an even byte boundary (multiples of eight bits); otherwise, the device will abort the operation and no erase operation will be performed.

If the memory is in the protected state, then the Block Erase command will not be executed, and the device will return to the idle state once the $\overline{CS}$ pin has been deasserted.

The WEL bit in the Status Register will be reset back to the logical “0” state if the erase cycle aborts due to an incomplete address being sent, the $\overline{CS}$ pin being deasserted on uneven byte boundaries, or because a memory location within the region to be erased is protected.

While the device is executing a successful erase cycle, the Status Register can be read and will indicate that the device is busy. For faster throughput, it is recommended that the Status Register be polled rather than waiting the t_{BLKE} time to determine if the device has finished erasing. At some point before the erase cycle completes, the WEL bit in the Status Register will be reset back to the logical “0” state.

The device also incorporates an intelligent erase algorithm that can detect when a byte location fails to erase properly. If an erase error occurs, it will be indicated by the EPE bit in the Status Register.

Figure 8-3. Block Erase

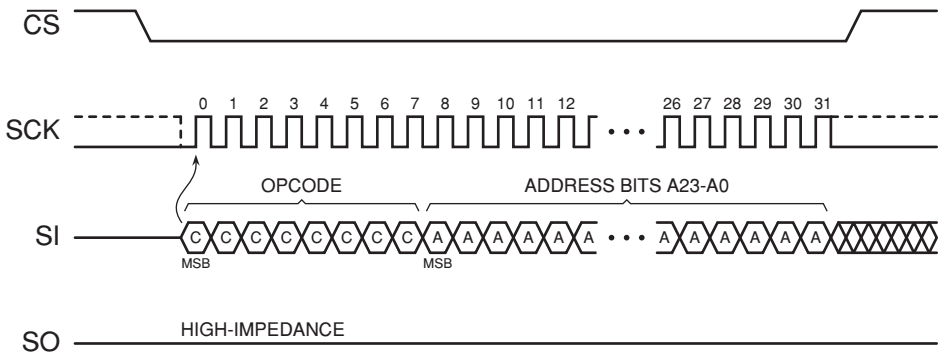

8.4 Chip Erase

The entire memory array can be erased in a single operation by using the Chip Erase command. Before a Chip Erase command can be started, the Write Enable command must have been previously issued to the device to set the WEL bit of the Status Register to a logical “1” state.

Three opcodes (60h, 62h, and C7h) can be used for the Chip Erase command. There is no difference in device functionality when utilizing the three opcodes, so they can be used interchangeably. To perform a Chip Erase, one of the three opcodes must be clocked into the device. Since the entire memory array is to be erased, no address bytes need to be clocked into the device, and any data clocked in after the opcode will be ignored. When the $\overline{CS}$ pin is deasserted, the device will erase the entire memory array. The erasing of the device is internally self-timed and should take place in a time of t_{CHPE}.

The complete opcode must be clocked into the device before the $\overline{CS}$ pin is deasserted, and the $\overline{CS}$ pin must be deasserted on an even byte boundary (multiples of eight bits); otherwise, no erase will be performed. In addition, if the memory array is in the protected state, then the Chip Erase command will not be executed, and the device will return to the idle state once the $\overline{CS}$ pin has been deasserted. The WEL bit in the Status Register will be reset back to the logical “0” state if the $\overline{CS}$ pin is deasserted on uneven byte boundaries or if the memory is in the protected state.

While the device is executing a successful erase cycle, the Status Register can be read and will indicate that the device is busy. For faster throughput, it is recommended that the Status Register be polled rather than waiting the t_{CHPE} time to determine if the device has finished erasing. At some point before the erase cycle completes, the WEL bit in the Status Register will be reset back to the logical “0” state.

The device also incorporates an intelligent erase algorithm that can detect when a byte location fails to erase properly. If an erase error occurs, it will be indicated by the EPE bit in the Status Register.

Figure 8-4. Chip Erase

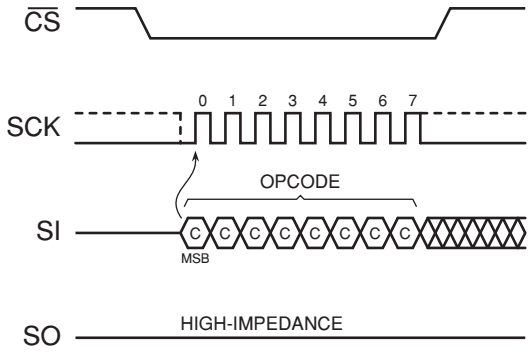

9. Protection Commands and Features

9.1 Write Enable

The Write Enable command is used to set the Write Enable Latch (WEL) bit in the Status Register to a logical “1” state. The WEL bit must be set before a Byte/Page Program, erase, Program OTP Security Register, or Write Status Register command can be executed. This makes the issuance of these commands a two step process, thereby reducing the chances of a command being accidentally or erroneously executed. If the WEL bit in the Status Register is not set prior to the issuance of one of these commands, then the command will not be executed.

To issue the Write Enable command, the $\overline{CS}$ pin must first be asserted and the opcode of 06h must be clocked into the device. No address bytes need to be clocked into the device, and any data clocked in after the opcode will be ignored. When the $\overline{CS}$ pin is deasserted, the WEL bit in the Status Register will be set to a logical “1”. The complete opcode must be clocked into the device before the $\overline{CS}$ pin is deasserted, and the $\overline{CS}$ pin must be deasserted on an even byte

boundary (multiples of eight bits); otherwise, the device will abort the operation and the state of the WEL bit will not change.

Figure 9-1. Write Enable

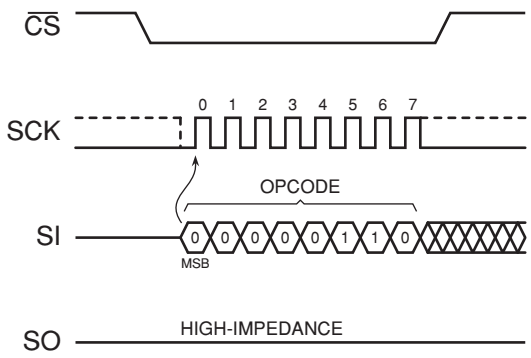

9.2 Write Disable

The Write Disable command is used to reset the Write Enable Latch (WEL) bit in the Status Register to the logical “0” state. With the WEL bit reset, all Byte/Page Program, erase, Program OTP Security Register, and Write Status Register commands will not be executed. Other conditions can also cause the WEL bit to be reset; for more details, refer to the WEL bit section of the Status Register description.

To issue the Write Disable command, the $\overline{CS}$ pin must first be asserted and the opcode of 04h must be clocked into the device. No address bytes need to be clocked into the device, and any data clocked in after the opcode will be ignored. When the $\overline{CS}$ pin is deasserted, the WEL bit in the Status Register will be reset to a logical “0”. The complete opcode must be clocked into the device before the $\overline{CS}$ pin is deasserted, and the $\overline{CS}$ pin must be deasserted on an even byte boundary (multiples of eight bits); otherwise, the device will abort the operation and the state of the WEL bit will not change.

Figure 9-2. Write Disable

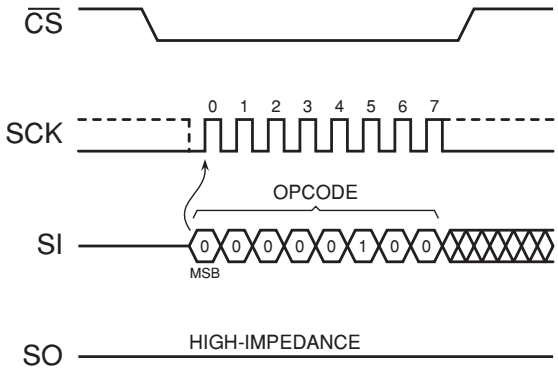

9.3 Block Protection

The device can be software protected against erroneous or malicious program or erase operations by utilizing the Block Protection feature of the device. Block Protection can be enabled or disabled by using the Write Status Register

command to change the value of the Block Protection (BP0) bit in the Status Register. The following table outlines the two states of the BP0 bit and the associated protection area.

Table 9-1. Memory Array Protection

Protection Level	BP0	Protected Memory Address
None	0	None
Full Memory	1	00000h - 007FFFh

When the BP0 bit of the Status Register is in the logical “1” state, the entire memory array will be protected against program or erase operations. Any attempts to send a Byte/Page Program command, a Block Erase command, or a Chip Erase command will be ignored by the device.

As a safeguard against accidental or erroneous protecting or unprotecting of the memory array, the BP0 bit itself can be locked from updates by using the $\overline{WP}$ pin and the BPL (Block Protection Locked) bit of the Status Register (see “Protected States and the Write Protect Pin” on page 14 for more details).

The BP0 bit of the Status Register is a nonvolatile bit; therefore, the BP0 bit will retain its state even after the device has been power cycled. Care should be taken to ensure that BP0 is in the logical “1” state before powering down for those applications that wish to have the memory array fully protected upon power up. The default state for BP0 when shipped from Adesto is “0”.

9.4 Protected States and the Write Protect Pin

The $\overline{WP}$ pin is not linked to the memory array itself and has no direct effect on the protection status of the memory array. Instead, the $\overline{WP}$ pin, in conjunction with the BPL (Block Protection Locked) bit in the Status Register, is used to control the hardware locking mechanism of the device. For hardware locking to be active, two conditions must be met-the $\overline{WP}$ pin must be asserted and the BPL bit must be in the logical “1” state.

When hardware locking is active, the Block Protection (BP0) bit is locked and the BPL bit itself is also locked. Therefore, if the memory array is protected, it will be locked in the protected state, and if the memory array is unprotected, it will be locked in the unprotected state. These states cannot be changed as long as hardware locking is active, so the Write Status Register command will be ignored. In order to modify the protection status of the memory array, the $\overline{WP}$ pin must first be deasserted, and the BPL bit in the Status Register must be reset back to the logical “0” state using the Write Status Register command.

If the $\overline{WP}$ pin is permanently connected to GND, then once the BPL bit is set to a logical “1”, the only way to reset the bit back to the logical “0” state is to power-cycle the device. This allows a system to power-up with all sectors software protected but not hardware locked. Therefore, sectors can be unprotected and protected as needed and then hardware locked at a later time by simply setting the BPL bit in the Status Register.

When the $\overline{WP}$ pin is deasserted, or if the $\overline{WP}$ pin is permanently connected to V_{CC}, the BPL bit in the Status Register can be set to a logical “1”, but doing so will not lock the BP0 bit.

Table 9-2 details the various protection and locking states of the device.

Table 9-2. Hardware and Software Locking

$\overline{WP}$	BPL	Locking	BPL Change Allowed	BP0 and Protection Status
0	0		Can be modified from 0 to 1	BP0 bit unlocked and modifiable using the Write Status Register command. Memory array can be protected and unprotected freely.
0	1	Hardware Locked	Locked	BP0 bit locked in current state. The Write Status Register command will have no affect. Memory array is locked in current protected or unprotected state.
1	0		Can be modified from 0 to 1	BP0 bit unlocked and modifiable using the Write Status Register command. Memory array can be protected and unprotected freely.
1	1		Can be modified from 1 to 0	BP0 bit unlocked and modifiable using the Write Status Register command. Memory array can be protected and unprotected freely.

10. Security Commands

10.1 Program OTP Security Register

The device contains a specialized OTP (One-Time Programmable) Security Register that can be used for purposes such as unique device serialization, system-level Electronic Serial Number (ESN) storage, locked key storage, etc. The OTP Security Register is independent of the main Flash memory array and is comprised of a total of 128 bytes of memory divided into two portions. The first 64 bytes (byte locations 0 through 63) of the OTP Security Register are allocated as a one-time user-programmable space. Once these 64 bytes have been programmed, they cannot be erased or reprogrammed. The remaining 64 bytes of the OTP Security Register (byte locations 64 through 127) are factory programmed by Adesto and will contain a unique value for each device. The factory programmed data is fixed and cannot be changed.

Table 10-1. OTP Security Register

Security Register Byte Number									
0	1	...	62	63	64	65	...	126	127
One-Time User Programmable					Factory Programmed by Adesto				

The user-programmable portion of the OTP Security Register does not need to be erased before it is programmed. In addition, the Program OTP Security Register command operates on the entire 64-byte user-programmable portion of the OTP Security Register at one time. Once the user-programmable space has been programmed with any number of bytes the user-programmable space cannot be programmed again; therefore, it is not possible to only program the first two bytes of the register and then program the remaining 62 bytes at a later time.

Before the Program OTP Security Register command can be issued, the Write Enable command must have been previously issued to set the WEL bit in the Status Register to a logical “1”. To program the OTP Security Register, the $\overline{CS}$ pin must first be asserted and an opcode of 9Bh must be clocked into the device followed by the three address bytes denoting the first byte location of the OTP Security Register to begin programming at. Since the size of the user-programmable portion of the OTP Security Register is 64 bytes, the upper order address bits do not need to be decoded by the device. Therefore, address bits A23-A6 will be ignored by the device and their values can be either a logical “1” or

"0". After the address bytes have been clocked in, data can then be clocked into the device and will be stored in the internal buffer.

If the starting memory address denoted by A23-A0 does not start at the beginning of the OTP Security Register memory space (A5-A0 are not all 0), then special circumstances regarding which OTP Security Register locations to be programmed will apply. In this situation, any data that is sent to the device that goes beyond the end of the 64-byte user-programmable space will wrap around back to the beginning of the OTP Security Register. For example, if the starting address denoted by A23-A0 is 00003Eh, and three bytes of data are sent to the device, then the first two bytes of data will be programmed at OTP Security Register addresses 00003Eh and 00003Fh while the last byte of data will be programmed at address 000000h. The remaining bytes in the OTP Security Register (addresses 000001h through 00003Dh) will not be programmed and will remain in the erased state (FFh). In addition, if more than 64 bytes of data are sent to the device, then only the last 64 bytes sent will be latched into the internal buffer.

When the $\overline{CS}$ pin is deasserted, the device will take the data stored in the internal buffer and program it into the appropriate OTP Security Register locations based on the starting address specified by A23-A0 and the number of data bytes sent to the device. If less than 64 bytes of data were sent to the device, then the remaining bytes within the OTP Security Register will not be programmed and will remain in the erased state (FFh). The programming of the data bytes is internally self-timed and should take place in a time of t_{OTPP}.

The three address bytes and at least one complete byte of data must be clocked into the device before the $\overline{CS}$ pin is deasserted, and the $\overline{CS}$ pin must be deasserted on even byte boundaries (multiples of eight bits); otherwise, the device will abort the operation and the user-programmable portion of the OTP Security Register will not be programmed. The WEL bit in the Status Register will be reset back to the logical "0" state if the OTP Security Register program cycle aborts due to an incomplete address being sent, an incomplete byte of data being sent, the $\overline{CS}$ pin being deasserted on uneven byte boundaries, or because the user-programmable portion of the OTP Security Register was previously programmed.

While the device is programming the OTP Security Register, the Status Register can be read and will indicate that the device is busy. For faster throughput, it is recommended that the Status Register be polled rather than waiting the t_{OTPP} time to determine if the data bytes have finished programming. At some point before the OTP Security Register programming completes, the WEL bit in the Status Register will be reset back to the logical "0" state.

If the device is powered-down during the OTP Security Register program cycle, then the contents of the 64-byte user programmable portion of the OTP Security Register cannot be guaranteed and cannot be programmed again.

The Program OTP Security Register command utilizes the internal 256-buffer for processing. Therefore, the contents of the buffer will be altered from its previous state when this command is issued.

Figure 10-1. Program OTP Security Register

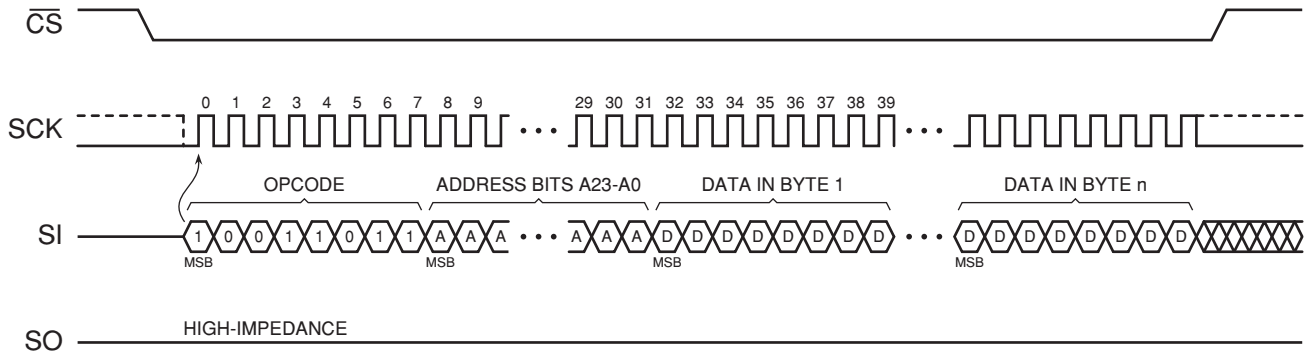

10.2 Read OTP Security Register

The OTP Security Register can be sequentially read in a similar fashion to the Read Array operation up to the maximum clock frequency specified by f_{CLK}. To read the OTP Security Register, the $\overline{CS}$ pin must first be asserted and the opcode of 77h must be clocked into the device. After the opcode has been clocked in, the three address bytes must be clocked in to specify the starting address location of the first byte to read within the OTP Security Register. Following the three address bytes, two dummy bytes must be clocked into the device before data can be output.

After the three address bytes and the dummy bytes have been clocked in, additional clock cycles will result in OTP Security Register data being output on the SO pin. When the last byte (00007Fh) of the OTP Security Register has been read, the device will continue reading back at the beginning of the register (000000h). No delays will be incurred when wrapping around from the end of the register to the beginning of the register.

Deasserting the $\overline{CS}$ pin will terminate the read operation and put the SO pin into a high-impedance state. The $\overline{CS}$ pin can be deasserted at any time and does not require that a full byte of data be read.

Figure 10-2. Read OTP Security Register

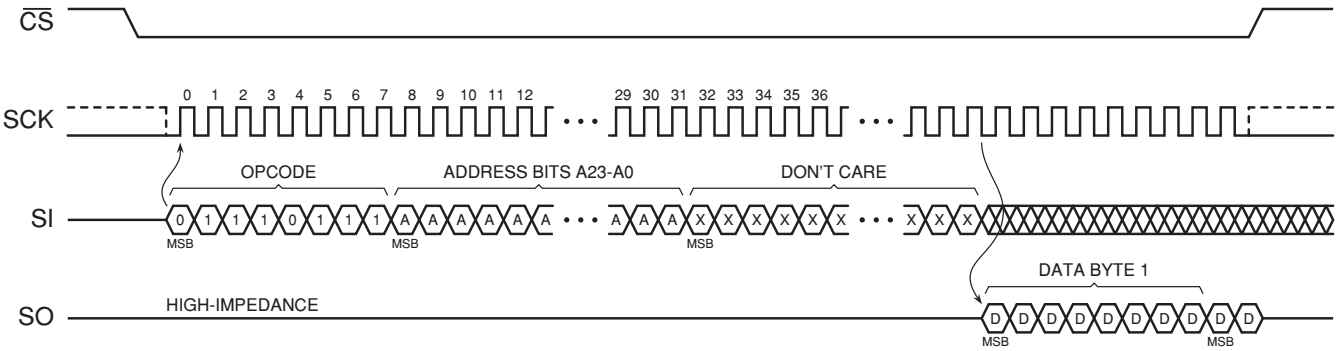

11. Status Register Commands

11.1 Read Status Register

The Status Register can be read to determine the device's ready/busy status, as well as the status of many other functions such as Hardware Locking and Block Protection. The Status Register can be read at any time, including during an internally self-timed program or erase operation.The Status Register consists of two bytes.

To read the Status Register, the $\overline{CS}$ pin must first be asserted and the opcode of 05h must be clocked into the device. After the opcode has been clocked in, the device will begin outputting Status Register data on the SO pin during every subsequent clock cycle. After the last bit (bit 0) of Status Register Byte 1 has been clocked out, the first bit (bit 7) of Status Register Byte 2 will be clocked out. After the last bit (bit 0) of Status Register Byte 2 has been clocked out, the sequence will repeat itself, starting again with bit 7 of Status Register Byte 1, as long as the $\overline{CS}$ pin remains asserted and the clock pin is being pulsed. The data in the Status Register is constantly being updated, so each repeating sequence will output new data.

Deasserting the $\overline{CS}$ pin will terminate the Read Status Register operation and put the SO pin into a high-impedance state. The $\overline{CS}$ pin can be deasserted at any time and does not require that a full byte of data be read.

Table 11-1. Status Register Format

Bit[1]	Name		Type[2]	Description	
7	BPL	Block Protection Locked	R/W	0	BP0 bit unlocked (default).
				1	BP0 bit locked in current state when $\overline{WP}$ asserted.
6	RES	Reserved for future use	R	0	Reserved for future use.
5	EPE	Erase/Program Error	R	0	Erase or program operation was successful.
				1	Erase or program error detected.
4	WPP	Write Protect ($\overline{WP}$) Pin Status	R	0	$\overline{WP}$ is asserted.
				1	$\overline{WP}$ is deasserted.

Table 11-1. Status Register Format

Bit[1]	Name		Type[2]	Description	
3	RES	Reserved for future use	R	0	Reserved for future use.
2	BP0	Block Protection	R/W	0	Entire memory array is unprotected.
				1	Entire memory array is protected.
1	WEL	Write Enable Latch Status	R	0	Device is not write enabled (default).
				1	Device is write enabled.
0	$\overline{\text{RDY}}$/BSY	Ready/Busy Status	R	0	Device is ready.
				1	Device is busy with an internal operation.

Notes: 1. Only bits 7 and 2 of the Status Register can be modified when using the Write Status Register command.
2. R/W = Readable and writable
R = Readable only

11.1.1 BPL Bit

The BPL bit is used to control whether the Block Protection (BP0) bit can be modified or not. When the BPL bit is in the logical “1” state and the $\overline{\text{WP}}$ pin is asserted, the BP0 bit will be locked and cannot be modified. The memory array will be locked in the current protected or unprotected state.

When the BPL bit is in the logical “0” state, the BP0 bit will be unlocked and can be modified. The BPL bit defaults to the logical “0” state after device power-up.

The BPL bit can be modified freely whenever the $\overline{\text{WP}}$ pin is deasserted. However, if the $\overline{\text{WP}}$ pin is asserted, then the BPL bit may only be changed from a logical “0” (BP0 bit unlocked) to a logical “1” (BP0 bit locked). In order to reset the BPL bit back to a logical “0” using the Write Status Register command, the $\overline{\text{WP}}$ pin will have to first be deasserted.

The BPL and BP0 bits are the only bits of the Status Register that can be user modified via the Write Status Register command.

11.1.2 EPE Bit

The EPE bit indicates whether the last erase or program operation completed successfully or not. If at least one byte during the erase or program operation did not erase or program properly, then the EPE bit will be set to the logical “1” state. The EPE bit will not be set if an erase or program operation aborts for any reason such as an attempt to erase or program the memory when it is protected or if the WEL bit is not set prior to an erase or program operation. The EPE bit will be updated after every erase and program operation.

11.1.3 WPP Bit

The WPP bit can be read to determine if the $\overline{\text{WP}}$ pin has been asserted or not.

11.1.4 BP0 Bit

The BP0 bits provides feedback on the software protection status for the device. In addition, the BP0 bit can also be modified to change the state of the software protection to allow the entire memory array to be protected or unprotected. When the BP0 bit is in the logical “0” state, then the entire memory array is unprotected. When the BP0 bit is in the logical “1” state, then the entire memory array is protected against program and erase operations.

11.1.5 WEL Bit

The WEL bit indicates the current status of the internal Write Enable Latch. When the WEL bit is in the logical “0” state, the device will not accept any Byte/Page Program, erase, Program OTP Security Register, or Write Status Register

commands. The WEL bit defaults to the logical “0” state after a device power-up or reset operation. In addition, the WEL bit will be reset to the logical “0” state automatically under the following conditions:

- Write Disable operation completes successfully
- Write Status Register operation completes successfully or aborts
- Program OTP Security Register operation completes successfully or aborts
- Byte/Page Program operation completes successfully or aborts
- Block Erase operation completes successfully or aborts
- Chip Erase operation completes successfully or aborts
- Hold condition aborts

If the WEL bit is in the logical “1” state, it will not be reset to a logical “0” if an operation aborts due to an incomplete or unrecognized opcode being clocked into the device before the $\overline{CS}$ pin is deasserted. In order for the WEL bit to be reset when an operation aborts prematurely, the entire opcode for a Byte/Page Program, erase, Program OTP Security Register, or Write Status Register command must have been clocked into the device.

11.1.6 $\overline{RDY}$/BSY Bit

The $\overline{RDY}$/BSY bit is used to determine whether or not an internal operation, such as a program or erase, is in progress. To poll the $\overline{RDY}$/BSY bit to detect the completion of a program or erase cycle, new Status Register data must be continually clocked out of the device until the state of the $\overline{RDY}$/BSY bit changes from a logical “1” to a logical “0”.Note that the $\overline{RDY}$/BSY bit can be read either from Status Register Byte 1 or from Status Register Byte 2.

11.1.7 RSTE Bit

The RSTE bit is used to enable or disable the Reset command. When the RSTE bit is in the Logical 0 state (the default state after power-up), the Reset command is disabled and any attempts to reset the device using the Reset command will be ignored. When the RSTE bit is in the Logical 1 state, the Reset command is enabled.

The RSTE bit will retain its state as long as power is applied to the device. Once set to the Logical 1 state, the RSTE bit will remain in that state until it is modified using the Write Status Register Byte 2 command or until the device has been power cycled. The Reset command itself will not change the state of the RSTE bit.

Table 11-2. Status Register Format – Byte 2

Bit[1]	Name		Type[2]	Description	
7	RES	Reserved for future use	R	0	Reserved for future use
6	RES	Reserved for future use	R	0	Reserved for future use
5	RES	Reserved for future use	R	0	Reserved for future use
4	RSTE	Reset Enabled	R/W	0	Reset command is disabled (default)
				1	Reset command is enabled
3	RES	Reserved for future use	R	0	Reserved for future use
2	RES	Reserved for future use	R	0	Reserved for future use
1	RES	Reserved for future use	R	0	Reserved for future use
0	$\overline{RDY}$/BSY	Ready/Busy Status	R	0	Device is ready
				1	Device is busy with an internal operation

Note: 1. Only bits 4 and 3 of Status Register Byte 2 will be modified when using the Write Status Register Byte 2 command
2. R/W = Readable and Writeable
R = Readable only.

Figure 11-1. Read Status Register

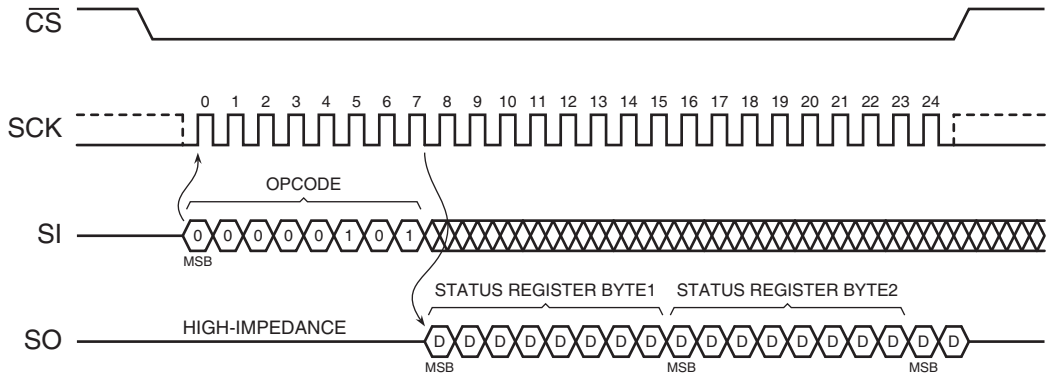

11.2 Write Status Register

The Write Status Register command is used to modify the BPL bit and the BP0 bit of the Status Register. Before the Write Status Register command can be issued, the Write Enable command must have been previously issued to set the WEL bit in the Status Register to a logical “1”.

To issue the Write Status Register command, the $\overline{CS}$ pin must first be asserted and the opcode of 01h must be clocked into the device followed by one byte of data. The one byte of data consists of the BPL bit value, four don’t care bits, the BP0 bit value, and two additional don’t care bits (see Table 11-3). Any additional data bytes that are sent to the device will be ignored. When the $\overline{CS}$ pin is deasserted, the BPL bit and the BP0 bit in the Status Register will be modified, and the WEL bit in the Status Register will be reset back to a logical “0”. The value of BP0 and the state of the BPL bit and the $\overline{WP}$ pin before the Write Status Register command was executed (the prior state of the BPL bit and the state of the $\overline{WP}$ pin when the $\overline{CS}$ pin is deasserted) will determine whether or not software protection will be changed. Please refer to Section 9.4, “Protected States and the Write Protect Pin” on page 14 for more details.

The complete one byte of data must be clocked into the device before the $\overline{CS}$ pin is deasserted, and the $\overline{CS}$ pin must be deasserted on even byte boundaries (multiples of eight bits); otherwise, the device will abort the operation, the state of the BPL and BP0 bits will not change, memory protection status will not change, and the WEL bit in the Status Register will be reset back to the logical “0” state.

If the $\overline{WP}$ pin is asserted, then the BPL bit can only be set to a logical “1”. If an attempt is made to reset the BPL bit to a logical “0” while the $\overline{WP}$ pin is asserted, then the Write Status Register Byte command will be ignored, and the WEL bit in the Status Register will be reset back to the logical “0” state. In order to reset the BPL bit to a logical “0”, the $\overline{WP}$ pin must be deasserted.

Table 11-3. Write Status Register Format

Bit 7	Bit 6	Bit 5	Bit 4	Bit 3	Bit 2	Bit 1	Bit 0
BPL	X	X	X	X	BP0	X	X

Figure 11-2. Write Status Register

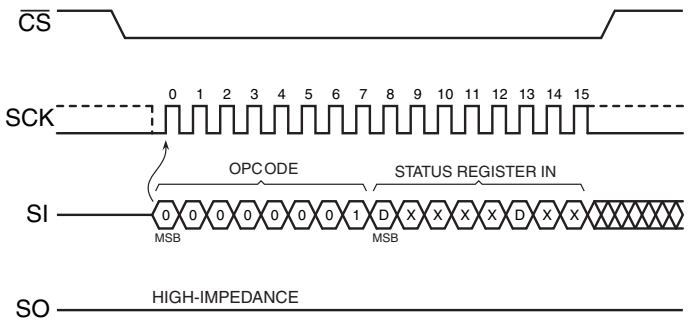

11.3 Write Status Register Byte 2

The Write Status Register Byte 2 command is used to modify the RSTE. Using the Write Status Register Byte 2 command is the only way to modify the RSTE in the Status Register during normal device operation. Before the Write Status Register Byte 2 command can be issued, the Write Enable command must have been previously issued to set the WEL bit in the Status Register to a Logical 1.

To issue the Write Status Register Byte 2 command, the $\overline{CS}$ pin must first be asserted and then the opcode 31h must be clocked into the device followed by one byte of data. The one byte of data consists of three don't-care bits, the RSTE bit value, and four additional don't-care bits (see Table 11-4). Any additional data bytes sent to the device will be ignored. When the $\overline{CS}$ pin is deasserted, the RSTE bit in the Status Register will be modified, and the WEL bit in the Status Register will be reset back to a Logical 0.

The complete one byte of data must be clocked into the device before the $\overline{CS}$ pin is deasserted, and the $\overline{CS}$ pin must be deasserted on even byte boundaries (multiples of eight bits); otherwise, the device will abort the operation, the state of the RSTE bit will not change, and the WEL bit in the Status Register will be reset back to the Logical 0 state.

Table 11-4. Write Status Register Byte 2 Format

Bit 7	Bit 6	Bit 5	Bit 4	Bit 3	Bit 2	Bit 1	Bit 0
X	X	X	RSTE	X	X	X	X

Figure 11-3. Write Status Register Byte 2

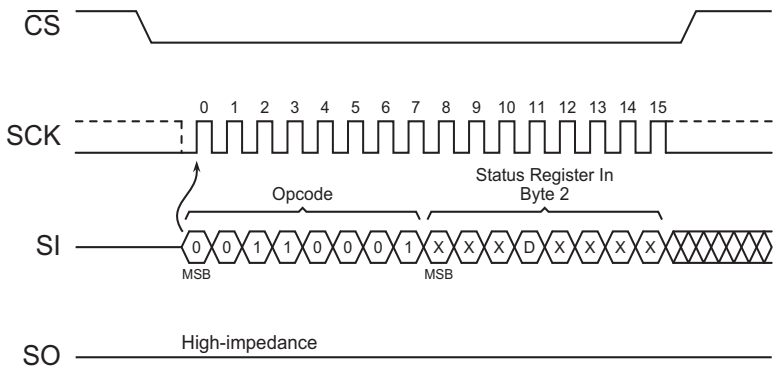

12. Other Commands and Functions

12.1 Read Manufacturer and Device ID

Identification information can be read from the device to enable systems to electronically query and identify the device while it is in system. The identification method and the command opcode comply with the JEDEC standard for “Manufacturer and Device ID Read Methodology for SPI Compatible Serial Interface Memory Devices”. The type of information that can be read from the device includes the JEDEC defined Manufacturer ID, the vendor specific Device ID, and the vendor specific Extended Device Information.

Since not all Flash devices are capable of operating at very high clock frequencies, applications should be designed to read the identification information from the devices at a reasonably low clock frequency to ensure all devices used in the application can be identified properly. Once the identification process is complete, the application can increase the clock frequency to accommodate specific Flash devices that are capable of operating at the higher clock frequencies.

To read the identification information, the $\overline{CS}$ pin must first be asserted and the opcode of 9Fh must be clocked into the device. After the opcode has been clocked in, the device will begin outputting the identification data on the SO pin during the subsequent clock cycles. The first byte that will be output will be the Manufacturer ID followed by two bytes of Device ID information. The fourth byte output will be the Extended Device Information String Length, which will be 00h indicating that no Extended Device Information follows. After the Extended Device Information String Length byte is output, the SO pin will go into a high-impedance state; therefore, additional clock cycles will have no affect on the SO pin and no data will be output. As indicated in the JEDEC standard, reading the Extended Device Information String Length and any subsequent data is optional.Deasserting the $\overline{CS}$ pin will terminate the Manufacturer and Device ID read operation and put the SO pin into a high-impedance state. The $\overline{CS}$ pin can be deasserted at any time and does not require that a full byte of data be read.

Table 12-1. Manufacturer and Device ID Information

Byte No.	Data Type	Value
1	Manufacturer ID	1Fh
2	Device ID (Part 1)	40h
3	Device ID (Part 2)	00h
4	Extended Device Information String Length	00h

Table 12-2. Manufacturer and Device ID Details

Data Type	Bit 7	Bit 6	Bit 5	Bit 4	Bit 3	Bit 2	Bit 1	Bit 0	Hex Value	Details
Manufacturer ID	JEDEC Assigned Code								1Fh	JEDEC Code: 0001 1111 (1Fh for Adesto)
	0	0	0	1	1	1	1	1		
Device ID (Part 1)	Family Code			Density Code					40h	Family Code: 010 (AT25F/AT25FSxxx series) Density Code: 00000 (256-Kbit)
	0	1	0	0	0	0	0	0		
Device ID (Part 2)	Sub Code			Product Version Code					00h	Sub Code: 000 (Standard series) Product Version:00000
	0	0	0	0	0	0	0	0		

Figure 12-1. Read Manufacturer and Device ID

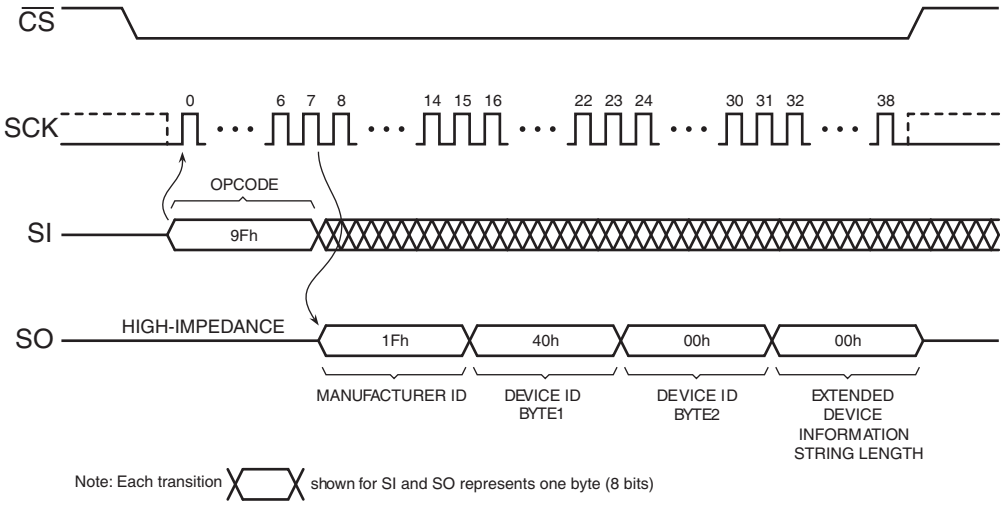

12.2 Read ID (Legacy Command)

Identification information can be read from the device to enable systems to electronically query and identify the device while it is in system. The preferred method for doing so is the JEDEC standard "Read Manufacturer and Device ID" method described in Section 12.1 on page 22; however, the legacy Read ID command is supported on the AT25DF256 to enable backwards compatibility to previous generation devices.

To read the identification information, the $\overline{CS}$ pin must first be asserted and the opcode of 15h must be clocked into the device. After the opcode has been clocked in, the device will begin outputting the identification data on the SO pin during the subsequent clock cycles. The first byte that will be output will be the Manufacturer ID of 1Fh followed by a single byte of data representing a device code of 65h. After the device code is output, the SO pin will go into a high-impedance state; therefore, additional clock cycles will have no affect on the SO pin and no data will be output.

Deasserting the $\overline{CS}$ pin will terminate the Read ID operation and put the SO pin into a high-impedance state. The $\overline{CS}$ pin can be deasserted at any time and does not require that a full byte of data read.

Figure 12-2. Read ID (Legacy Command)

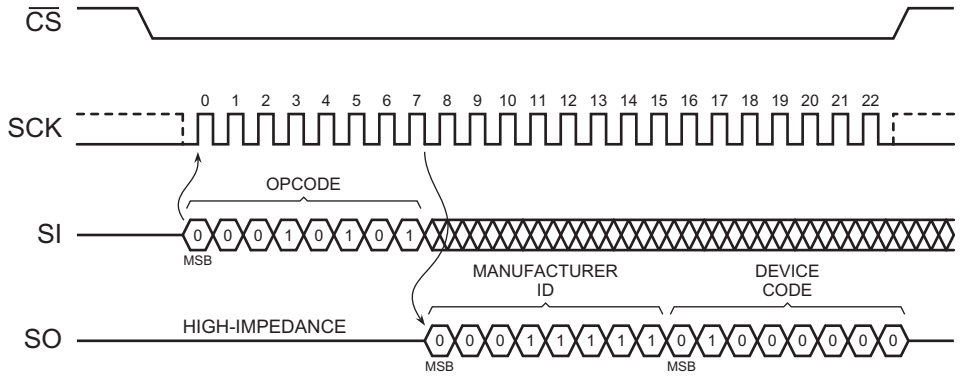

12.3 Deep Power-Down

During normal operation, the device will be placed in the standby mode to consume less power as long as the $\overline{CS}$ pin remains deasserted and no internal operation is in progress. The Deep Power-Down command offers the ability to place the device into an even lower power consumption state called the Deep Power-Down mode.

When the device is in the Deep Power-Down mode, all commands including the Read Status Register command will be ignored with the exception of the Resume from Deep Power-Down command. Since all commands will be ignored, the mode can be used as an extra protection mechanism against program and erase operations.

Entering the Deep Power-Down mode is accomplished by simply asserting the $\overline{CS}$ pin, clocking in the opcode of B9h, and then deasserting the $\overline{CS}$ pin. Any additional data clocked into the device after the opcode will be ignored. When the $\overline{CS}$ pin is deasserted, the device will enter the Deep Power-Down mode within the maximum time of t_{EDPD}.

The complete opcode must be clocked in before the $\overline{CS}$ pin is deasserted, and the $\overline{CS}$ pin must be deasserted on an even byte boundary (multiples of eight bits); otherwise, the device will abort the operation and return to the standby mode once the $\overline{CS}$ pin is deasserted. In addition, the device will default to the standby mode after a power-cycle.

The Deep Power-Down command will be ignored if an internally self-timed operation such as a program or erase cycle is in progress. The Deep Power-Down command must be reissued after the internally self-timed operation has been completed in order for the device to enter the Deep Power-Down mode.

Figure 12-3. Deep Power-Down

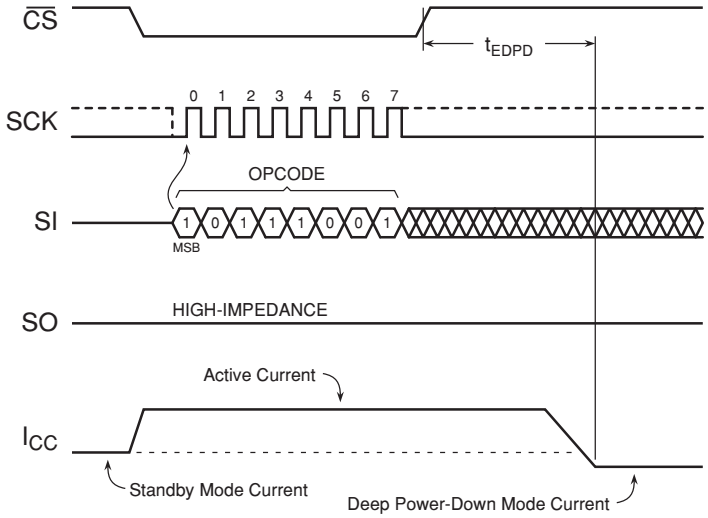

12.4 Resume from Deep Power-Down

In order to exit the Deep Power-Down mode and resume normal device operation, the Resume from Deep Power-Down command must be issued. The Resume from Deep Power-Down command is the only command that the device will recognized while in the Deep Power-Down mode.

To resume from the Deep Power-Down mode, the $\overline{CS}$ pin must first be asserted and opcode of ABh must be clocked into the device. Any additional data clocked into the device after the opcode will be ignored. When the $\overline{CS}$ pin is deasserted, the device will exit the Deep Power-Down mode within the maximum time of t_{RDPD} and return to the standby mode. After the device has returned to the standby mode, normal command operations such as Read Array can be resumed.

If the complete opcode is not clocked in before the $\overline{CS}$ pin is deasserted, or if the $\overline{CS}$ pin is not deasserted on an even byte boundary (multiples of eight bits), then the device will abort the operation and return to the Deep Power-Down mode.

Figure 12-4. Resume from Deep Power-Down

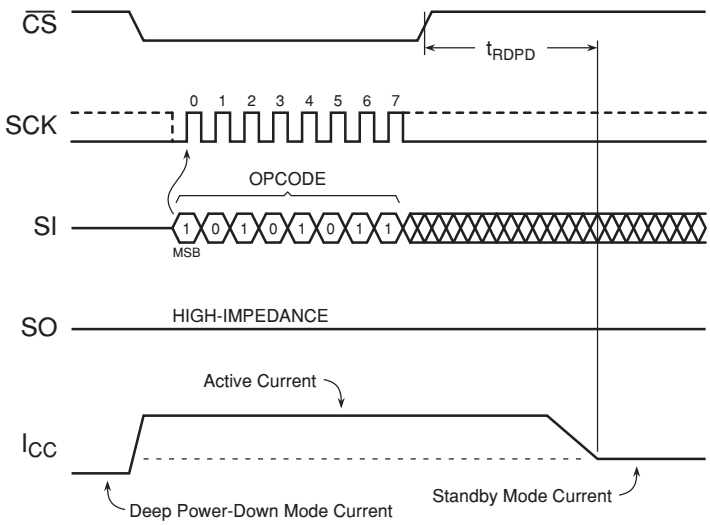

12.5 Ultra-Deep Power-Down

The Ultra-Deep Power-Down mode allows the device to further reduce its energy consumption compared to the existing standby and Deep Power-Down modes by shutting down additional internal circuitry. When the device is in the Ultra-Deep Power-Down mode, all commands including the Status Register Read and Resume from Deep Power-Down commands will be ignored. Since all commands will be ignored, the mode can be used as an extra protection mechanism against inadvertent or unintentional program and erase operations. Entering the Ultra-Deep Power-Down mode is accomplished by simply asserting the $\overline{CS}$ pin, clocking in the opcode 79h, and then deasserting the $\overline{CS}$ pin. Any additional data clocked into the device after the opcode will be ignored. When the $\overline{CS}$ pin is deasserted, the device will enter the Ultra-Deep Power-Down mode within the maximum time of t_{EUDPD}

The complete opcode must be clocked in before the $\overline{CS}$ pin is deasserted; otherwise, the device will abort the operation and return to the standby mode once the $\overline{CS}$ pin is deasserted. In addition, the device will default to the standby mode after a power cycle. The Ultra-Deep Power-Down command will be ignored if an internally self-timed operation such as a program or erase cycle is in progress.

Figure 12-5. Ultra-Deep Power-Down

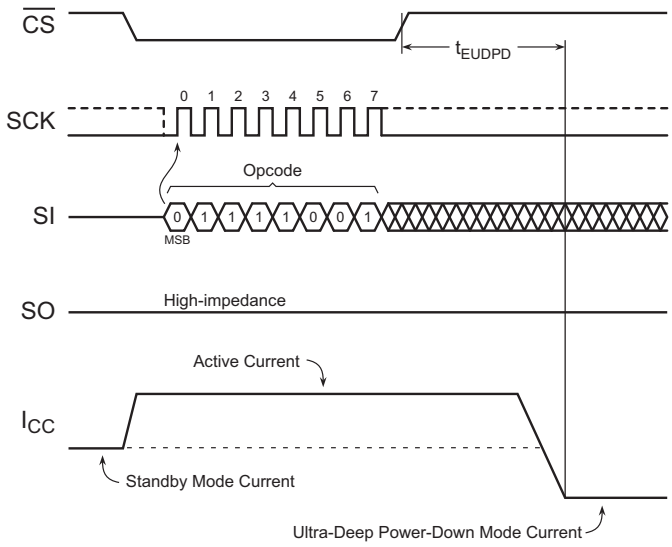

12.6 Exit Ultra-Deep Power-Down

To exit from the Ultra-Deep Power-Down mode, any one of three operations can be performed:

Chip Select Toggle

The $\overline{CS}$ pin must simply be pulsed by asserting the $\overline{CS}$ pin, waiting the minimum necessary t_{CSLU} time, and then deasserting the $\overline{CS}$ pin again. To facilitate simple software development, a dummy byte opcode can also be entered while the $\overline{CS}$ pin is being pulsed; the dummy byte opcode is simply ignored by the device in this case. After the $\overline{CS}$ pin has been deasserted, the device will exit from the Ultra-Deep Power-Down mode and return to the standby mode within a maximum time of t_{XUDPD} If the $\overline{CS}$ pin is reasserted before the t_{XUDPD} time has elapsed in an attempt to start a new operation, then that operation will be ignored and nothing will be performed.

Figure 12-6. Exit Ultra-Deep Power-Down (Chip Select Toggle)

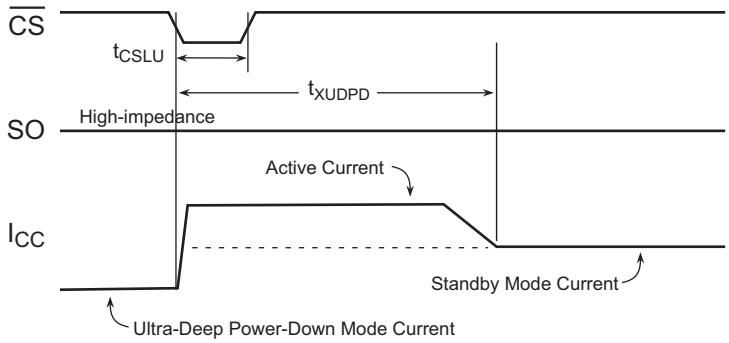

Chip Select Low

By asserting the $\overline{CS}$ pin, waiting the minimum necessary t_{XUDPD} time, and then clocking in the first bit of the next Opcode command cycle. If the first bit of the next command is clocked in before the t_{XUDPD} time has elapsed, the device will exit Ultra Deep Power Down, however the intended operation will be ignored.

Figure 12-7. Exit Ultra-Deep Power-Down (Chip Select Low)

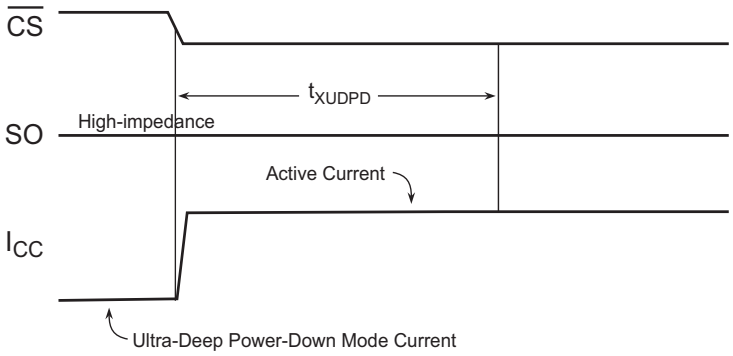

Power Cycling

The device can also exit the Ultra Deep Power Mode by power cycling the device. The system must wait for the device to return to the standby mode before normal command operations can be resumed. Upon recovery from Ultra Deep Power Down all internal registers will be at there Power-On default state.

12.7 Hold

The $\overline{\text{HOLD}}$ pin is used to pause the serial communication with the device without having to stop or reset the clock sequence. The Hold mode, however, does not have an affect on any internally self-timed operations such as a program or erase cycle. Therefore, if an erase cycle is in progress, asserting the $\overline{\text{HOLD}}$ pin will not pause the operation, and the erase cycle will continue until it is finished.

The Hold mode can only be entered while the $\overline{\text{CS}}$ pin is asserted. The Hold mode is activated simply by asserting the $\overline{\text{HOLD}}$ pin during the SCK low pulse. If the $\overline{\text{HOLD}}$ pin is asserted during the SCK high pulse, then the Hold mode won't be started until the beginning of the next SCK low pulse. The device will remain in the Hold mode as long as the $\overline{\text{HOLD}}$ pin and $\overline{\text{CS}}$ pin are asserted.

While in the Hold mode, the SO pin will be in a high-impedance state. In addition, both the SI pin and the SCK pin will be ignored. The $\overline{\text{WP}}$ pin, however, can still be asserted or deasserted while in the Hold mode.

To end the Hold mode and resume serial communication, the $\overline{\text{HOLD}}$ pin must be deasserted during the SCK low pulse. If the $\overline{\text{HOLD}}$ pin is deasserted during the SCK high pulse, then the Hold mode won't end until the beginning of the next SCK low pulse.

If the $\overline{\text{CS}}$ pin is deasserted while the $\overline{\text{HOLD}}$ pin is still asserted, then any operation that may have been started will be aborted, and the device will reset the WEL bit in the Status Register back to the logical "0" state.

Figure 12-8. Hold Mode

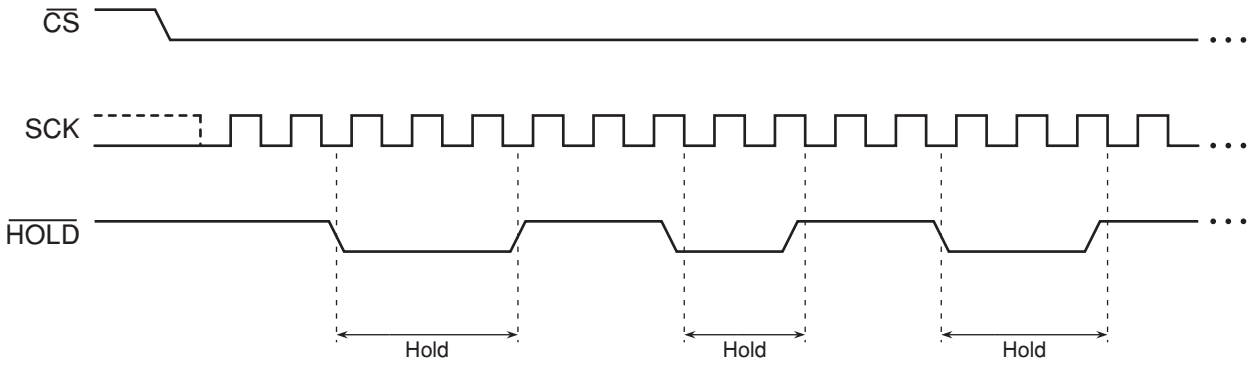

12.8 Reset

In some applications, it may be necessary to prematurely terminate a program or erase operation rather than wait the hundreds of microseconds or milliseconds necessary for the program or erase operation to complete normally. The Reset command allows a program or erase operation in progress to be ended abruptly and returns the device to an idle state. Since the need to reset the device is immediate, the Write Enable command does not need to be issued prior to the Reset command. Therefore, the Reset command operates independently of the state of the WEL bit in the Status Register.

The Reset command can be executed only if the command has been enabled by setting the Reset Enabled (RSTE) bit in the Status Register to a Logical 1 using write status register byte 2 command 31h. This command should be entered before a program command is entered. If the Reset command has not been enabled (the RSTE bit is in the Logical 0 state), then any attempts at executing the Reset command will be ignored.

To perform a Reset, the $\overline{CS}$ pin must first be asserted, and then the opcode F0h must be clocked into the device. No address bytes need to be clocked in, but a confirmation byte of D0h must be clocked into the device immediately after the opcode. Any additional data clocked into the device after the confirmation byte will be ignored. When the $\overline{CS}$ pin is deasserted, the program operation currently in progress will be terminated within a time of t_{SWRST}. Since the program or erase operation may not complete before the device is reset, the contents of the page being programmed or erased cannot be guaranteed to be valid.

The Reset command has no effect on the states of the Configuration Register or RSTE bit in the Status Register. The WEL however, will be reset back to its default state.

The complete opcode and confirmation byte must be clocked into the device before the $\overline{CS}$ pin is deasserted, and the $\overline{CS}$ pin must be deasserted on an even byte boundary (multiples of eight bits); otherwise, no Reset operation will be performed.

Figure 12-9. Reset

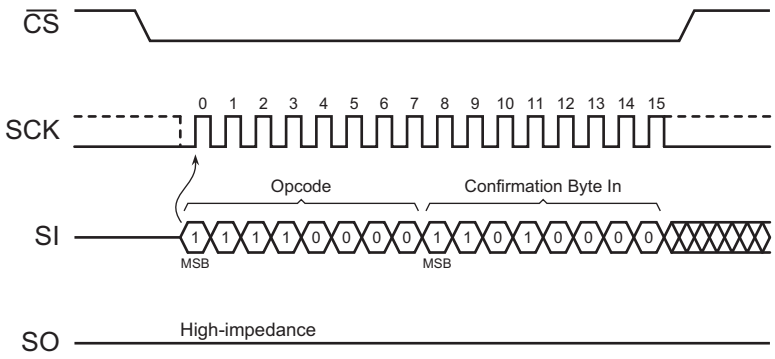

13. Electrical Specifications

13.1 Absolute Maximum Ratings*

Temperature under Bias	-55°C to +125°C
Storage Temperature	-65°C to +150°C
All Input Voltages (including NC Pins) with Respect to Ground	-0.6V to +4.1V
All Output Voltages with Respect to Ground	-0.6V to V_{CC} + 0.5V

*Notice: Stresses beyond those listed under “Absolute Maximum Ratings” may cause permanent damage to the device. This is a stress rating only and functional operation of the device at these or any other conditions beyond those indicated in the operational sections of this specification is not implied. Exposure to absolute maximum rating conditions for extended periods may affect device reliability.

13.2 DC and AC Operating Range

		AT25DF256
Operating Temperature (Case) (1)	Ind.	-40°C to 85°C
V_{CC} Power Supply		1.65V to 3.6V

1. Temperature Range:-10°C to +85°C (1.65V to 3.6V), -40°C to +85° (1.7V to 3.6V)

13.3 DC Characteristics

Symbol	Parameter	Condition	1.65V to 3.6V			2.3V to 3.6V			Units
			Min	Typ	Max	Min	Typ	Max	
I_{UDPD}	Ultra-Deep Power-Down Current	$\overline{CS}$ = V_{CC}. All other inputs at 0V or V_{CC}		0.2	1		0.3	1	µA
I_{DPD}	Deep Power-Down Current	$\overline{CS}$ = V_{CC}. All other inputs at 0V or V_{CC}		5	15		8.5	15	µA
I_{SB}	Standby Current	$\overline{CS}$ = V_{CC}. All other inputs at 0V or V_{CC}		25	40		25	40	µA
I_{CC1} (1)(2)	Active Current, Low Power Read (03h, 0Bh) Operation	f = 1MHz; I_{OUT} = 0mA		4.5	9		5.5	9	mA
		f = 20MHz; I_{OUT} = 0mA		4.5	9		5.5	9	mA
I_{CC2} (1)(2)	Active Current, Read Operation	f = 50MHz; I_{OUT} = 0mA		5	10		6	10	mA
		f = 85MHz; I_{OUT} = 0mA		5	10		6	10	mA
I_{CC3} (1)(2)	Active Current, Program Operation	$\overline{CS}$ = V_{CC}		12	16		12	16	mA
I_{CC4} (1)(2)	Active Current, Erase Operation	$\overline{CS}$ = V_{CC}		12	18		12	18	mA
I_{LI}	Input Load Current	All inputs at CMOS levels			1			1	µA
I_{LO}	Output Leakage Current	All inputs at CMOS levels			1			1	µA
V_{IL}	Input Low Voltage				V_{CC} x 0.2			V_{CC} x 0.3	V
V_{IH}	Input High Voltage		V_{CC} x 0.8			V_{CC} x 0.7			V
V_{OL}	Output Low Voltage	I_{OL} = 100µA			0.2			0.4	V
V_{OH}	Output High Voltage	I_{OH} = -100µA	V_{CC} - 0.2V			V_{CC} - 0.2V			V

Notes: 1. Typical values measured at 1.8V @ 25°C for the 1.65V to 3.6V range.
2. Typical values measured at 3.0V @ 25°C for the 2.3V to 3.6V range.

13.4 AC Characteristics - Maximum Clock Frequencies

Symbol	Parameter	1.65V to 3.6V			2.3V to 3.6V			Units
		Min	Typ	Max	Min	Typ	Max	
f_{CLK}	Maximum Clock Frequency for All Operations (including 0Bh opcode)			104			104	MHz
f_{RDLF}	Maximum Clock Frequency for 03h Opcode (Read Array – Low Frequency)			33			33	MHz
f_{RDDO}	Maximum Clock Frequency for 3B Opcode			50			50	MHz

13.5 AC Characteristics – All Other Parameters

Symbol	Parameter	1.65V to 3.6V			2.3V to 3.6V			Units
		Min	Typ	Max	Min	Typ	Max	
t_{CLKH}	Clock High Time	4			4			ns
t_{CLKL}	Clock Low Time	4			4			ns
t_{CLKR}(1)	Clock Rise Time, Peak-to-Peak (Slew Rate)	0.1			0.1			V/ns
t_{CLKF}(1)	Clock Fall Time, Peak-to-Peak (Slew Rate)	0.1			0.1			V/ns
t_{CSH}	Chip Select High Time	35			25			ns
t_{CSLS}	Chip Select Low Setup Time (relative to Clock)	6			6			ns
t_{CSLH}	Chip Select Low Hold Time (relative to Clock)	6			6			ns
t_{CSHS}	Chip Select High Setup Time (relative to Clock)	6			6			ns
t_{CSHH}	Chip Select High Hold Time (relative to Clock)	6			6			ns
t_{DS}	Data In Setup Time	2			2			ns
t_{DH}	Data In Hold Time	1			1			ns
t_{DIS}(1)	Output Disable Time			8			6	ns
t_V	Output Valid Time			8			6	ns
t_{OH}	Output Hold Time	0			0			ns
t_{HLS}	$\overline{\text{HOLD}}$ Low Setup Time (relative to Clock)	6			5			ns
t_{HLH}	$\overline{\text{HOLD}}$ Low Hold Time (relative to Clock)	6			5			ns
t_{HHS}	$\overline{\text{HOLD}}$ High Setup Time (relative to Clock)	6			5			ns
t_{HHH}	$\overline{\text{HOLD}}$ High Hold Time (relative to Clock)	6			5			ns
t_{HLQZ}(1)	$\overline{\text{HOLD}}$ Low to Output High-Z			7			6	ns
t_{HHQX}(1)	$\overline{\text{HOLD}}$ High to Output Low-Z			7			6	ns
t_{WPS}(1)(2)	Write Protect Setup Time	20			20			ns
t_{WPH}(1)(2)	Write Protect Hold Time	100			100			ns
t_{EDPD}(1)	Chip Select High to Deep Power-Down			2			2	µs
t_{EUDPD}·	Chip Select High to Ultra Deep Power-Down			3			3	µs
t_{SWRST}	Software Reset Time			60			60	µs
t_{CSLU}	Minimum Chip Select Low to Exit Ultra Deep Power-Down	20			20			ns
t_{XUDPD}	Exit Ultra Deep Power-Down Time	70			70			µs
t_{RDPD}(1)	Chip Select High to Standby Mode			8			8	µs

Notes: 1. Not 100% tested (value guaranteed by design and characterization).
2. Only applicable as a constraint for the Write Status Register command when BPL = 1.

13.6 Program and Erase Characteristics

Symbol	Parameter		1.65V-3.6V			2.3V-3.6V			
						Min	Typ	Max	Units
t_{PP}[1]	Page Program Time	256 Bytes		1.5	3.5		1.5	3.5	ms
t_{BP}	Byte Program Time			12			8		µs
t_{PE}	Page Erase Time	256 Bytes		6	25		6	25	ms
t_{BLKE}[1]	Block Erase Time	4 Kbytes		50	75		50	60	ms
		32 Kbytes		350	600		300	400	
t_{CHPE}[1][2]	Chip Erase Time			350	600		300	400	ms
t_{OTPP}[1]	OTP Security Register Program Time			400	950		400	950	µs
t_{WRSR}[2]	Write Status Register Time			20	40		20	40	ms

Note:
1. Maximum values indicate worst-case performance after 100,000 erase/program cycles.
2. Not 100% tested (value guaranteed by design and characterization).
3. Program and Erase operations characterized at -10°C to +85°C. Program and Erase operations at -40°C to -10°C require a minimum of 1.7V.

14. Power-On/Reset State

When power is first applied to the device, or when recovering from a reset condition, the output pin (SO) will be in a high impedance state, and a high-to-low transition on the CSB pin will be required to start a valid instruction. The SPI mode (Mode 3 or Mode 0) will be automatically selected on every falling edge of CSB by sampling the inactive clock state.

14.1 Power-Up/Power-Down Voltage and Timing Requirements

During power-up, the device must not be READ for at least the minimum t_{VCSL} time after the supply voltage reaches the minimum V_{POR} level (V_{POR} min). While the device is being powered-up, the internal Power-On Reset (POR) circuitry keeps the device in a reset mode until the supply voltage rises above the minimum V_{cc}. During this time, all operations are disabled and the device will not respond to any commands.

If the first operation to the device after power-up will be a program or erase operation, then the operation cannot be started until the supply voltage reaches the minimum V_{CC} level and an internal device delay has elapsed. This delay will be a maximum time of t_{PUW}. After the t_{PUW} time, the device will be in the standby mode if CSB is at logic high or active mode if CSB is at logic low. For the case of Power-down then Power-up operation, or if a power interruption occurs (such that VCC drops below V_{POR} max), the V_{cc} of the Flash device must be maintained below V_{PWD} for at least the minimum specified T_{PWD} time. This is to ensure the Flash device will reset properly after a power interruption.

Table 14-1. Voltage and Timing Requirements for Power-Up/Power-Down

Symbol	Parameter	Min	Max	Units
V_{PWD} (1)	V_{CC} for device initialization		1.0	V
t_{PWD} (1)	Minimum duration for device initialization	300		µs
t_{VCSL}	Minimum V_{CC} to chip select low time for Read command	70		µs
t_{VR} (1)	V_{CC} rise time	1	500000	µs/V
V_{POR}	Power on reset voltage	1.45	1.6	V
t_{PUW}	Power up delay time before Program or Erase is allowed		3	ms

1. Not 100% tested (value guaranteed by design and characterization).

Figure 14-1. Power-Up Timing

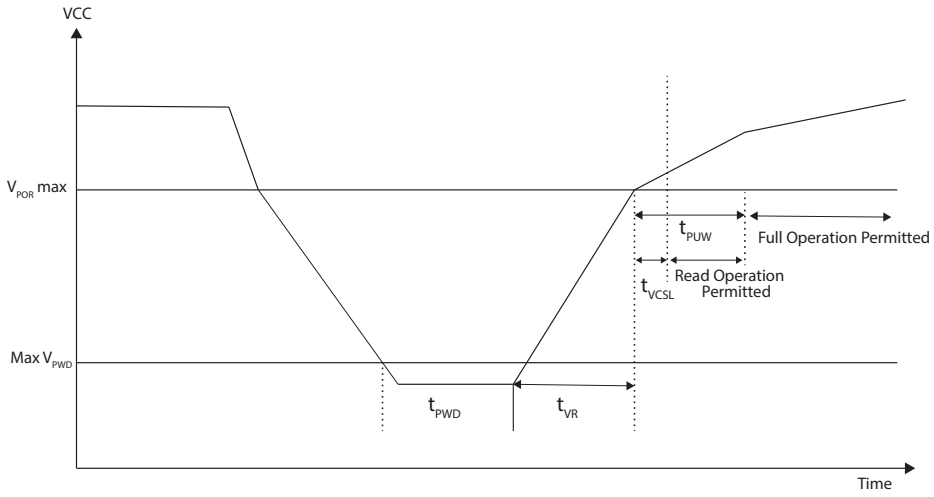

14.2 Input Test Waveforms and Measurement Levels

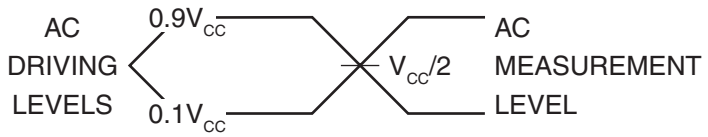

t_R, t_F < 2 ns (10% to 90%)

14.3 Output Test Load

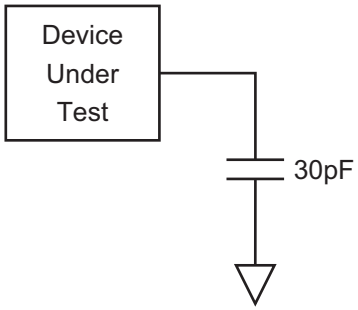

15. AC Waveforms

Figure 15-1. Serial Input Timing

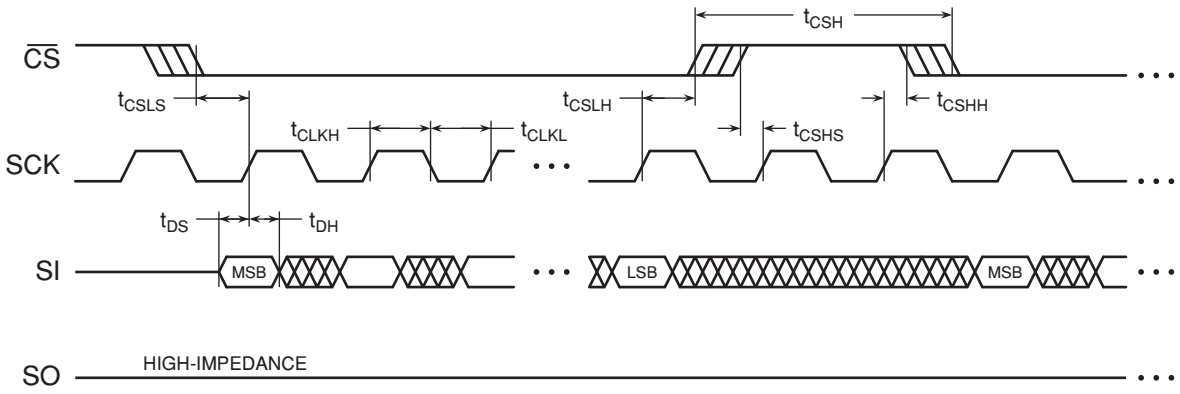

Figure 15-2. Serial Output Timing

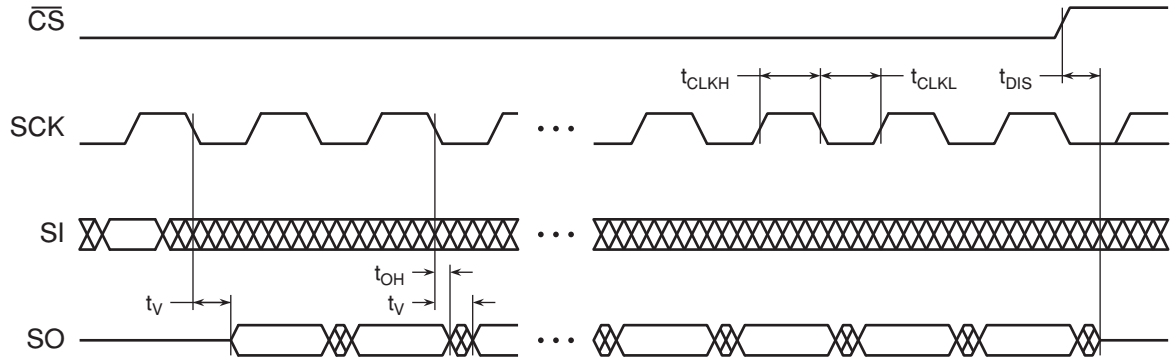

Figure 15-3. $\overline{WP}$ Timing for Write Status Register Command When BPL = 1

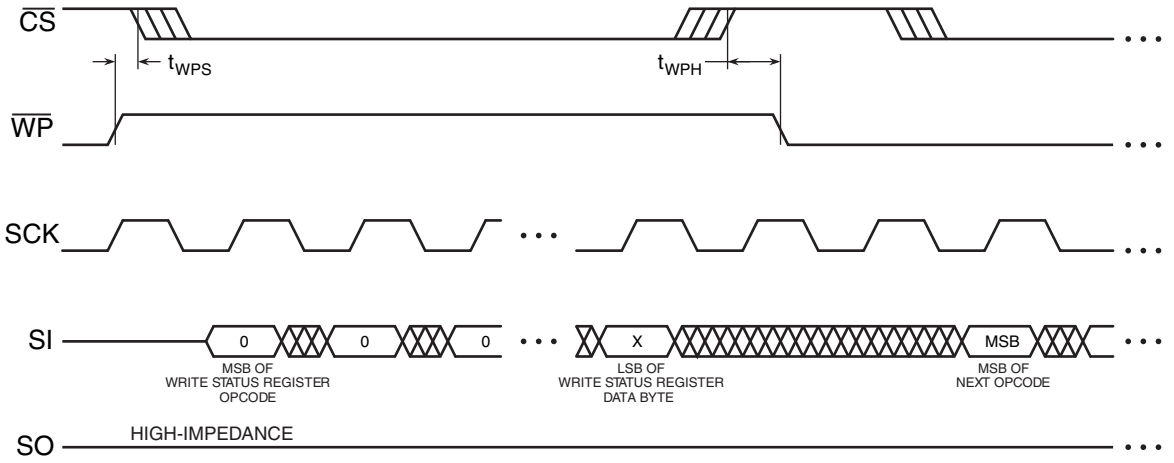

Figure 15-4. $\overline{HOLD}$ Timing – Serial Input

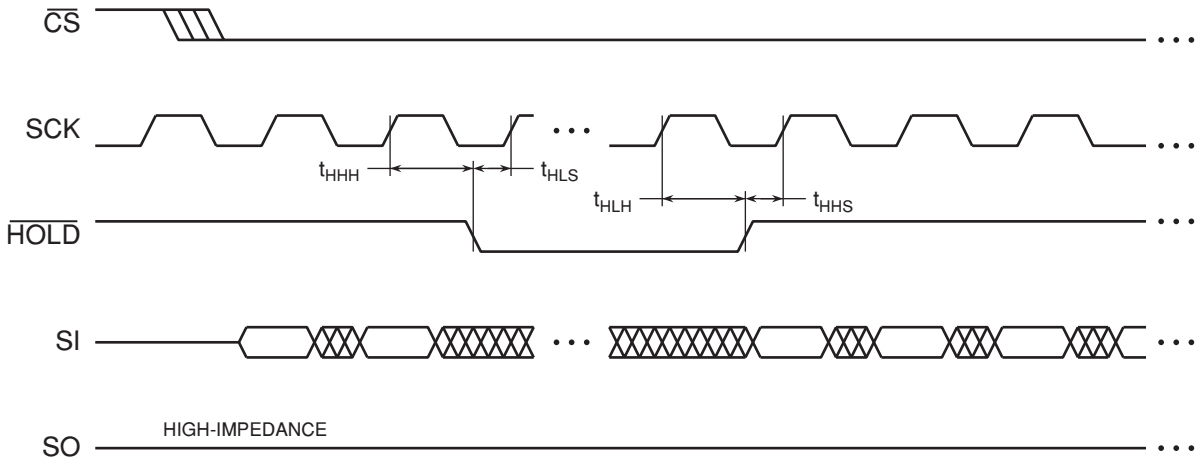

Figure 15-5. $\overline{\text{HOLD}}$ Timing – Serial Output

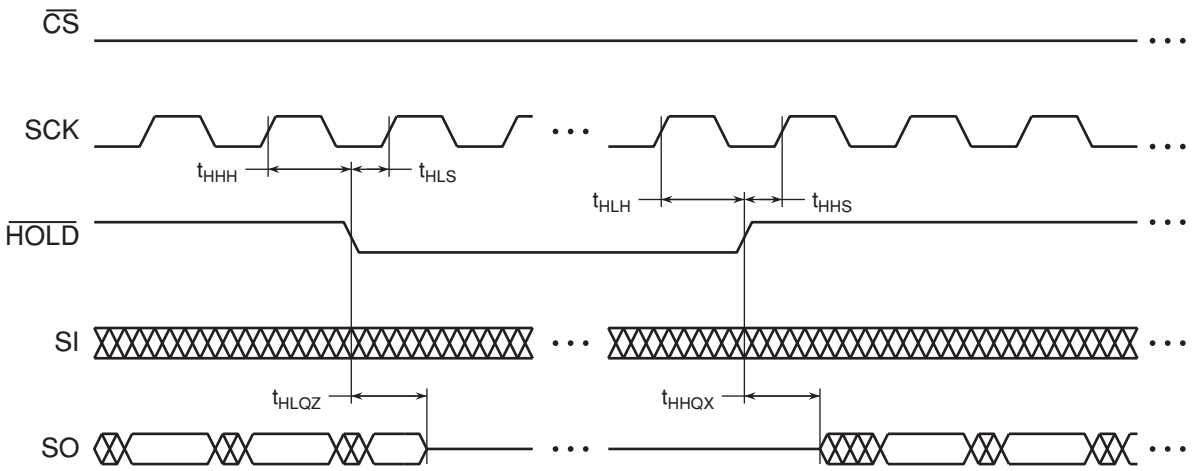

16. Ordering Information

16.1 Ordering Code Detail

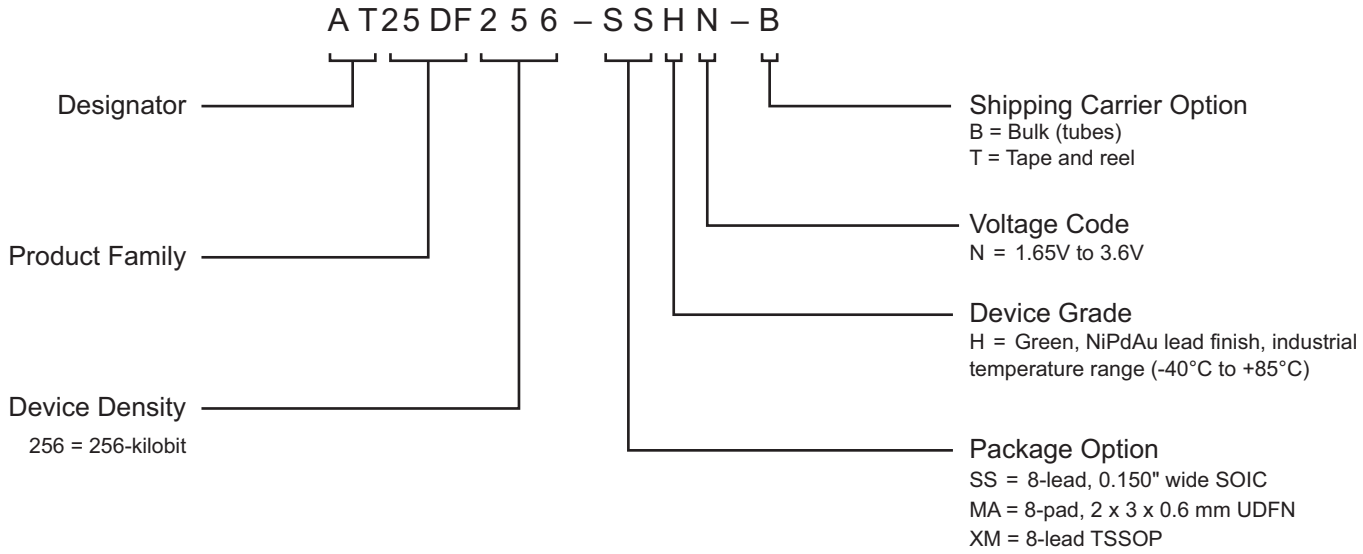

16.2 Green Package Options (Pb/Halide-free/RoHS Compliant)

Ordering Code [1]	Package	Lead Finish	Operating Voltage	Max. Freq. (MHz)	Operation Range
AT25DF256-SSHN-B AT25DF256-SSHN-T	8S1	NiPdAu	1.65V to 3.6V [2]	104	Industrial (-40°C to +85°C)[2]
AT25DF256-MAHN-T	8MA3				
AT25DF256-XMHN-B	8X				
AT25DF256-XMHN-T					

1. The shipping carrier option code is not marked on the devices.
2. Temperature Range:-10°C to +85°C (1.65V to 3.6V), -40°C to +85° (1.7V to 3.6V).

Package Type	
8S1	8-lead, 0.150" Wide, Plastic Gull Wing Small Outline Package (JEDEC SOIC)
8MA3	8-pad, 2 x 3 x 0.6 mm, Thermally Enhanced Plastic Ultra Thin Dual Flat No Lead Package (UDFN)
8X	8-lead, Thin Small Outline Package

17. Packaging Information

17.1 8S1 – JEDEC SOIC

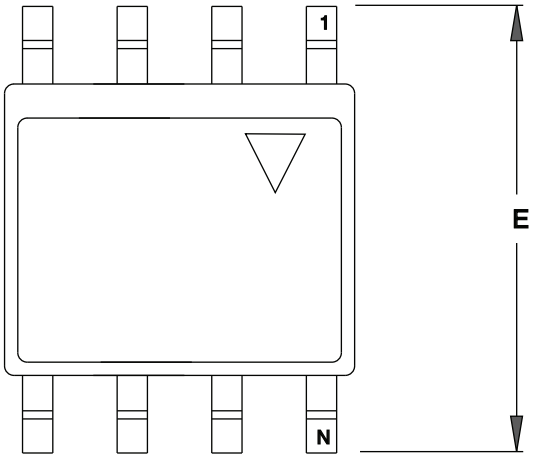

TOP VIEW

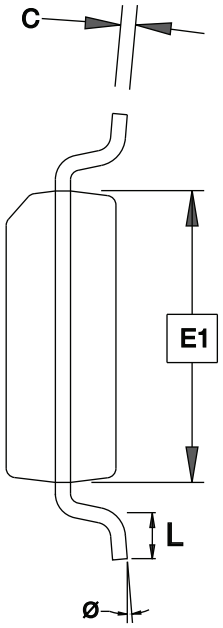

END VIEW

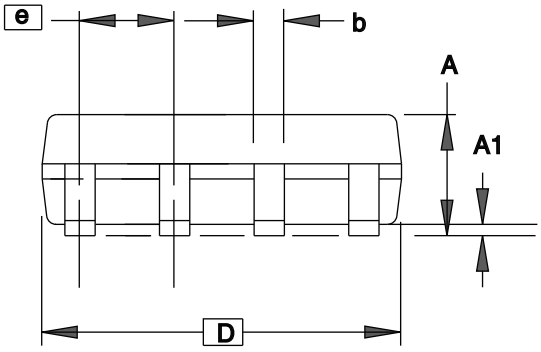

SIDE VIEW

Notes: This drawing is for general information only.
Refer to JEDEC Drawing MS-012, Variation AA
for proper dimensions, tolerances, datums, etc.

COMMON DIMENSIONS
(Unit of Measure = mm)

SYMBOL	MIN	NOM	MAX	NOTE
A	1.35	–	1.75	
A1	0.10	–	0.25	
b	0.31	–	0.51	
C	0.17	–	0.25	
D	4.80	–	5.05	
E1	3.81	–	3.99	
E	5.79	–	6.20	
e	1.27 BSC			
L	0.40	–	1.27	
ø	0°	–	8°	

8/20/14

adesto™ TECHNOLOGIES Package Drawing Contact: contact@adestotech.com	TITLE 8S1, 8-lead (0.150"Wide Body), Plastic Gull Wing Small Outline (JEDEC SOIC)	GPC SWB	DRAWING NO. 8S1	REV. G

17.2 8MA3 – UDFN

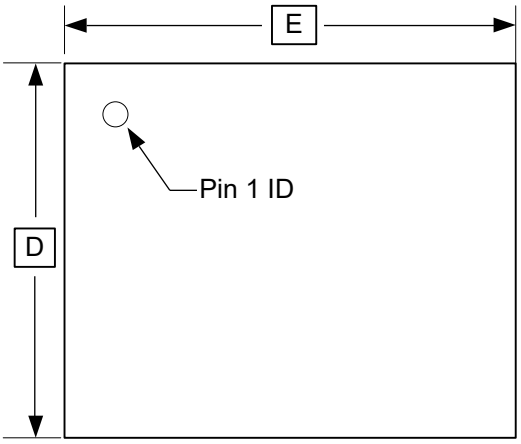

TOP VIEW

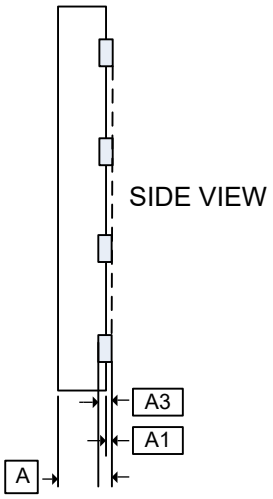

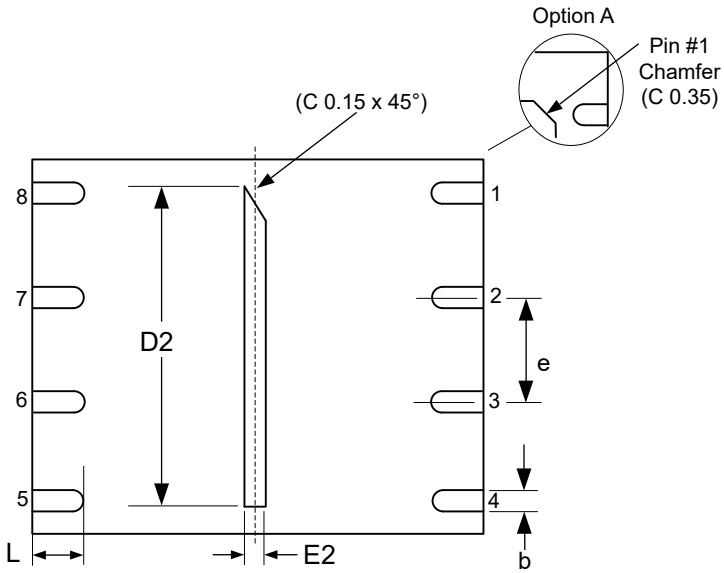

BOTTOM VIEW

COMMON DIMENSIONS
(Unit of Measure = mm)

SYMBOL	MIN	NOM	MAX
A	0.45		0.60
A1	0.00		0.06
A3		0.150 REF	
b	0.20		0.30
D		2.00 BSC ±0.1	
D2	1.55	1.60	1.65
E		3.00 BSC ±0.1	
e		0.50 BSC	
E2	0.15	0.20	0.25
L	0.40	0.50	0.60

Notes: 1. This package conforms to JEDEC reference MO-229, Saw Singulation.
2. The terminal #1 ID is a Laser-marked feature.

	TITLE	GPC	DRAWING NO.	REV.
dialog SEMICONDUCTOR	8-pad (2 x 3 x 0.6 mm Body), Thermally Enhanced Plastic Ultra Thin Dual Flat No Lead Package (UDFN)	YFG	8MA3	D

17.3 8X-TSSOP

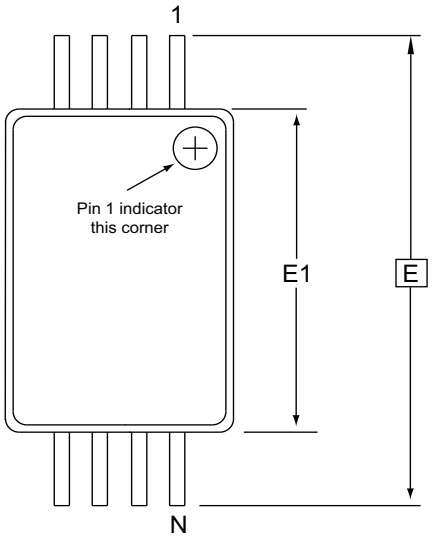

Top View

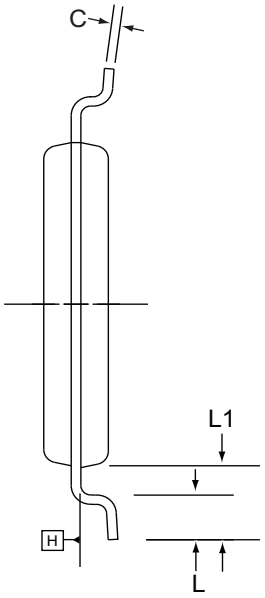

End View

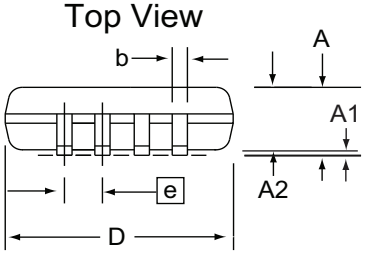

Side View

Notes:
1. This drawing is for general information only. Refer to JEDEC Drawing MO-153, Variation AA, for proper dimensions, tolerances, datums, etc.
2. Dimension D does not include mold Flash, protrusions or gate burrs. Mold Flash, protrusions and gate burrs shall not exceed 0.15mm (0.006in) per side.
3. Dimension E1 does not include inter-lead Flash or protrusions. Inter-lead Flash and protrusions shall not exceed 0.25mm (0.010in) per side.
4. Dimension b does not include Dambar protrusion. Allowable Dambar protrusion shall be 0.08mm total in excess of the b dimension at maximum material condition. Dambar cannot be located on the lower radius of the foot. Minimum space between protrusion and adjacent lead is 0.07mm.
5. Dimension D and E1 to be determined at Datum Plane H.

COMMON DIMENSIONS
(Unit of Measure = mm)

SYMBOL	MIN	NOM	MAX	NOTE
A	-	-	1.20	
A1	0.05	-	0.15	
A2	0.80	1.00	1.05	
D	2.90	3.00	3.10	2, 5
E		6.40 BSC		
E1	4.30	4.40	4.50	3, 5
b	0.19	–	0.30	4
e		0.65 BSC		
L	0.45	0.60	0.75	
L1		1.00 REF		
C	0.09	-	0.20	

12/8/11

adesto TECHNOLOGIES Package Drawing Contact: contact@adestotech.com	TITLE 8X, 8-lead 4.4mm Body, Plastic Thin Shrink Small Outline Package (TSSOP)	GPC TNR	DRAWING NO. 8X	REV. E

18. Revision History

Revision Level – Release Date	History
A – April 2014	Initial release. Document posted to public website.
B – October 2014	Corrected last byte address in sections 6, 7.1, and 7.2. Corrected 8S1 and 8MA3 package outline drawings. Updated I_{UDPD} description in Table 13.3. Updated Table 9-1 (Protected Memory Address). Removed tray shipping option.Updated AC and DC specifications. Changed document status to Preliminary.
C – November 2015	Updated I_{DPD} and I_{SB} specification conditions. Updated document status from Preliminary to Complete.
D – February 2017	Added patent information.Updated description in Section 8.2 (Page Erase). Updated Power-On Timing description (Section 14.)
E – December 2021	Updated drawing in section 17.2.
F – December 2022	Changed company logo to Renesas.

IMPORTANT NOTICE AND DISCLAIMER

RENESAS ELECTRONICS CORPORATION AND ITS SUBSIDIARIES (“RENESAS”) PROVIDES TECHNICAL SPECIFICATIONS AND RELIABILITY DATA (INCLUDING DATASHEETS), DESIGN RESOURCES (INCLUDING REFERENCE DESIGNS), APPLICATION OR OTHER DESIGN ADVICE, WEB TOOLS, SAFETY INFORMATION, AND OTHER RESOURCES “AS IS” AND WITH ALL FAULTS, AND DISCLAIMS ALL WARRANTIES, EXPRESS OR IMPLIED, INCLUDING, WITHOUT LIMITATION, ANY IMPLIED WARRANTIES OF MERCHANTABILITY, FITNESS FOR A PARTICULAR PURPOSE, OR NON-INFRINGEMENT OF THIRD PARTY INTELLECTUAL PROPERTY RIGHTS.

These resources are intended for developers skilled in the art designing with Renesas products. You are solely responsible for (1) selecting the appropriate products for your application, (2) designing, validating, and testing your application, and (3) ensuring your application meets applicable standards, and any other safety, security, or other requirements. These resources are subject to change without notice. Renesas grants you permission to use these resources only for development of an application that uses Renesas products. Other reproduction or use of these resources is strictly prohibited. No license is granted to any other Renesas intellectual property or to any third party intellectual property. Renesas disclaims responsibility for, and you will fully indemnify Renesas and its representatives against, any claims, damages, costs, losses, or liabilities arising out of your use of these resources. Renesas' products are provided only subject to Renesas' Terms and Conditions of Sale or other applicable terms agreed to in writing. No use of any Renesas resources expands or otherwise alters any applicable warranties or warranty disclaimers for these products.

(Rev.1.0 Mar 2020)

Corporate Headquarters

TOYOSU FORESIA, 3-2-24 Toyosu,
Koto-ku, Tokyo 135-0061, Japan
www.renesas.com

Contact Information

For further information on a product, technology, the most up-to-date version of a document, or your nearest sales office, please visit:
www.renesas.com/contact/

Trademarks

Renesas and the Renesas logo are trademarks of Renesas Electronics Corporation. All trademarks and registered trademarks are the property of their respective owners.

© 2021 Renesas Electronics Corporation. All rights reserved.