AT25FF081A

8-Mbit, 1.65 V – 3.6 V Range SPI Serial Flash Memory with Multi-I/O Support

Features

- Voltage Range: 1.65 V - 3.6 V
- 8 Mbit (4 x 2 Mbit physical block) Flash Memory
- Serial Peripheral Interface (SPI) compatible
  - Supports SPI modes 0 and 3
  - Supports dual output operation (1-1-2)
  - Supports quad output operation (1-1-4)
  - Supports quad I/O operation (1-4-4)
  - Supports XiP operation (1-4-4, 0-4-4)
- 133 MHz maximum operating frequency
  - Clock-to-output of 8 ns
- Flexible, optimized erase architecture for code + data storage applications
  - Uniform 4-kByte block erase
  - Uniform 32-kByte block erase
  - Uniform 64-kByte block erase
  - Full chip erase
- Flexible non-volatile block protection
- 1 x 128-byte factory-programmed unique identifier
- 3 x 128-byte, One Time Programmable (OTP) security registers
- Flexible programming
  - Byte/Page program (1 to 256 Bytes)
  - Sequential program mode capability
- Erase program suspend resume
- Software controlled *Reset* and *Terminate* commands
- Hardware reset option (via $\overline{\text{HOLD}}$ pin)
- JEDEC hardware reset
- Non-volatile Status Register configuration option
- JEDEC standard manufacturer and device ID read methodology
- Serial Flash Discoverable Parameters (SFDP) version 1.6
- Low power dissipation
  - 30 µA standby current (typical)
  - 8.5 µA Deep Power-Down (DPD) current (typical)
  - 7 nA Ultra Deep Power-Down (UDPD) current (typical)
  - 8.5 mA active read current (1-1-1 — 104 MHz)
  - 8.5 mA program current
  - 9.6 mA erase current
- User configurable and auto I/O pin drive levels
- Endurance:100,000 program/erase cycles
- Data Retention: 20 years
- Temperature Range: -40 ºC to +85 ºC
- Industry standard green (Pb/Halide-free/RoHS Compliant) Package Options
  - 8-lead SOIC (150-mil)
  - 8-lead SOIC (208-mil)
  - 8-pad Ultra-thin DFN (2 x 3 x 0.6 mm)
  - 8-ball WLCSP
  - Die in Wafer Form (DWF)

© 2022 Renesas Electronics

Contents

Features 1

Figures 4

Tables 5

1. Product Overview 6

2. Package Pinouts 7

3. Block Diagram 8

4. Pin Descriptions 9

5. Device Operation 11

5.1 Data Transfer Modes 11
5.2 Standard SPI Operation 11
5.3 Dual Output Operation (1-1-2) 15
5.4 Quad Output Operation (1-1-4) 16
5.5 Quad I/O Operation (1-4-4) 17
5.6 XiP Mode Operation 18
5.7 Memory Architecture 20
5.8 Memory Protection 22
5.9 Power-Down Considerations 25
5.10 Erase/Program Suspend Considerations and Nested Operations 28
5.11 OTP Security Register Lock 33
5.12 Standard JEDEC Hardware Reset 34
5.13 Chip Select Restrictions 35
5.14 HOLD / RESET Function 35

6. Status Registers 36

6.1 Register Structure and Updates 36
6.2 Register Accesses 37
6.3 Status Register 1 37
6.4 Status Register 2 39
6.5 Status Register 3 42
6.6 Status Register 4 43
6.7 Status Register 5 44

7. Commands and Addressing 45

7.1 Read Array (03h, 0Bh) 48
7.2 Dual Output Read Array (3Bh) 49
7.3 Quad Output Read Array (6Bh) 50
7.4 XiP Read (EBh), XiP Read with Double-word Aligned Address (E7h) 51
7.5 Block Erase (20h, 52h, D8h) 54
7.6 Chip Erase (60h, C7h) 55
7.7 Byte/Page Program (02h) 56
7.8 Sequential Program Mode (ADh/AFh) 57
7.9 Dual Output Byte/Page Program (A2h) 60
7.10 Quad Output Page Program (32h) 62
7.11 Program/Erase Suspend (75h/B0h) 63
7.12 Program/Erase Resume (7Ah/D0h) 66
7.13 Set Burst Wrap (77h) 67

© 2022 Renesas Electronics

7.14 Write Enable (06h) 68
7.15 Write Disable (04h) 69
7.16 Volatile Status Register Write Enable (50h) 69
7.17 Individual Block Lock (36h) 70
7.18 Individual Block Unlock (39h) 71
7.19 Read Block Lock (3Ch/3Dh) 72
7.20 Global Block Lock (7Eh) 73
7.21 Global Block Unlock (98h) 74
7.22 Program Security Register (9Bh) 75
7.23 Read OTP Security Register (4Bh) 77
7.24 Read Status Registers 1 - 3 (05h, 35h, 15h) 78
7.25 Read Status Registers (65h) 79
7.26 Write Status Registers 1 - 3 — Direct (01h, 31h, 11h) 81
7.27 Write Status Registers — Indirect (71h) 82
7.28 Status Register Lock (6Fh) 84
7.29 Deep Power-Down (B9h) 85
7.30 Resume from Ultra-Deep Power-Down / Deep Power-Down with Device ID (ABh) 86
7.31 Ultra-Deep Power-Down (79h) 88
7.32 Enable Reset (66h) and Reset Device (99h) 89
7.33 Terminate (F0h) 90
7.34 Read Manufacturer/Device ID (90h) 91
7.35 Quad I/O Read Manufacturer/Device ID (94h) 92
7.36 Read JEDEC ID (9Fh) 93
7.37 Serial Flash Discoverable Parameters (5Ah) 95

8. Electrical Specifications 96

8.1 Absolute Maximum Ratings 96
8.2 DC and AC Operating Range 96
8.3 DC Characteristics 96
8.4 AC Characteristics - Maximum Clock Frequencies 97
8.5 AC Characteristics – All Other Parameters 97
8.6 Program and Erase Characteristics 98
8.7 Power On Timing 98
8.8 AC Timing Diagrams 100

9. Ordering Information 102

10. Packaging Information 103

10.1 8S1 – JEDEC SOIC 104
10.2 8S2 – 8-lead EIAJ SOIC 105
10.3 8-Pad 2 x 3 x 0.6 UDFN 106
10.4 8-ball 3 x 2 x 3 Array WLCSP 107

11. Revision History 108

© 2022 Renesas Electronics

Figures

Figure 1. Memory Package Types . . . 7
Figure 2. Block Diagram . . . 8
Figure 3. SPI Transfer — Command Only . . . 12
Figure 4. SPI Transfer — Command and Address Only . . . 12
Figure 5. SPI Transfer — Command and Data Only — Read Operation . . . 13
Figure 6. SPI Transfer — Command and Data Only — Write Operation . . . 13
Figure 7. SPI Transfer — Command, Address, and Data — Read Operation with No Dummy Bytes . . . 14
Figure 8. SPI Transfer — Command, Address, and Data — Read Operation with Dummy Bytes . . . 14
Figure 9. SPI Transfer — Command, Address, and Data — Write Operation . . . 14
Figure 10. Dual Output Read — 1-Pin Command, 1-Pin Address, and 2-Pin Data . . . 15
Figure 11. Dual Output Write — 1-Pin Command, 1-Pin Address, and 2-Pin Data . . . 15
Figure 12. Quad Output Transfer — 1-Pin Command, 1-Pin Address, and 4-Pin Data — Read Operation . . . 16
Figure 13. Quad Output Transfer — 1-Pin Command, 1-Pin Address, and 4-Pin Data — Write Operation . . . 16
Figure 14. Quad I/O Transfer — 1-Pin Command, 4-Pin Address, and 4-Pin Data — Read Operation . . . 17
Figure 15. XiP Transfer — 1-Pin Command, 4-Pin Address, and 4-Pin Data — Initial Read (M[5:4] = 2'b10) . . . 18
Figure 16. XiP Transfer — 4-Pin Address, and 4-Pin Data — Subsequent Reads (M[5:4] = 2'b10) . . . 19
Figure 17. XiP Transfer — Command, 4-Pin Address, and 4-Pin Data — Write Operation . . . 19
Figure 18. Flow Diagram of Nested Operations Example . . . 29
Figure 19. Issuing a Terminate Command Before the Suspend Command has Completed . . . 31
Figure 20. Allowing Enough Time for the Suspend Operation to Complete . . . 32
Figure 21. OTP Security Register Program and Lock . . . 33
Figure 22. JEDEC Standard Hardware Reset . . . 34
Figure 23. AT25FF081A Register Structure . . . 36
Figure 24. Status Register Read Operation Showing 8-bit Address Field . . . 80
Figure 25. Status Register Write Operation Showing 8-bit Address Field . . . 83
Figure 26. Status Register Lock Operation with Two Verification Bytes . . . 84
Figure 27. Resume from Deep Power-Down or Ultra-Deep Power-Down . . . 87
Figure 28. Entering Ultra-Deep Power-Down State . . . 88
Figure 29. Enable Reset and Reset Command Sequence (SPI Mode) . . . 89
Figure 30. Read JEDEC ID . . . 94
Figure 31. AC Timing During Device Power Up . . . 99
Figure 32. AC Power-up Timing After a Brown-Out . . . 99
Figure 33. Serial Input Timing . . . 100
Figure 34. Serial Output Timing . . . 100
Figure 35. $\overline{\text{WP}}$ Timing for Write Status Register Command . . . 100
Figure 36. $\overline{\text{HOLD}}$ Timing – Serial Input . . . 101
Figure 37. $\overline{\text{HOLD}}$ Timing – Serial Output . . . 101

© 2022 Renesas Electronics

Tables

Table 1. Pin Descriptions 9
Table 2. Bus Transfer Types 11
Table 3. AT25FF081A Device Block Memory Map 20
Table 4. AT25FF081A Device Block Memory Map — Page Program 21
Table 5. AT25FF081A Device Block Protection Map — CMPRT = 0, WPS = 0 23
Table 6. AT25FF081A Device Block Protection Map — CMPRT = 1, WPS = 0 24
Table 7. Entering DPD or UDPD Mode 26
Table 8. Exiting DPD or UDPD Mode 26
Table 9. Resetting the Device During a Program or Erase Operation 27
Table 10. Encoding of Erase/Program Suspend Operations 28
Table 11. Command Errors and Their Effect on the EE and PE Bits 30
Table 12. Indirect Addressing of Status Registers 37
Table 13. Status Register 1 Format 38
Table 14. Status Register 2 Format 39
Table 15. Status Register Protection During Normal Operation 41
Table 16. Status Register Protection During Reset 41
Table 17. Status Register 3 Format 42
Table 18. Status Register 4 Format 43
Table 19. Status Register 5 Format 44
Table 20. Command Listing 45
Table 21. Frequency and Number of Dummy Clocks Based on Command Type in Non-Wrap Mode (default) 53
Table 22. Frequency and Number of Dummy Clocks Based on Command Type in Wrap Mode (77h) 53
Table 23. Command Behavior During Sequential Programming Mode 58
Table 24. Command Behavior During Program/Erase or Program/Erase Suspend Operations 64
Table 25. Encoding of Burst Wrap Bits 67
Table 26. OTP Security Register 0 Bit Assignments 75
Table 27. OTP Security Register 1 Bit Assignments 75
Table 28. OTP Security Register 2 Bit Assignments 75
Table 29. OTP Security Register 3 Bit Assignments 75
Table 30. OTP Security Register Addressing 76
Table 31. Indirect Addressing of the Status Registers 79
Table 32. Indirect Status Register Read Sequence 80
Table 33. Indirect Addressing of the Status Registers 82
Table 34. Indirect Status Register Write Sequence 83
Table 35. Options for Exiting DPD and UDPD Modes 86
Table 36. Manufacturer and Device ID Details 93
Table 37. Device ID Part 4 Variants — EDI String Value 94
Table 38. Power On Timing Requirements 99
Table 39. Valid Ordering Codes 102

© 2022 Renesas Electronics

1. Product Overview

The AT25FF081A is a serial interface Flash memory device designed for use in a wide variety of high-volume consumer and connected applications. It is optimized for low-energy applications and can be operated using modern Lithium battery technologies over a wide input voltage range of 1.65 V - 3.6 V.

The AT25FF081A is ideally suited for systems in which program code is shadowed from Flash memory into embedded or external RAM (code shadow) for execution, and where small amounts of data are stored and updated locally in the Flash memory.

The erase block sizes of the AT25FF081A have been optimized to meet the needs of today's code and data storage applications. The device supports 4 kilobyte (kB), 32 kB, and 64 kB block erase operations and a full-chip erase. By optimizing the size of the erase blocks, the memory space can be used much more efficiently.

The device contains four specialized 128-byte One-Time Programmable (OTP) security registers that can be used to store a unique device ID and locked key storage.

Specifically designed for use in a wide variety of systems, the AT25FF081A supports read, program, and erase operations. No separate voltage is required for programming and erasing.

Throughout this document, the term Multi-I/O is used generically to refer to all of the multiple I/O modes, including dual, quad, and XiP.

The physical block size for this device is 2 Mbit.

© 2022 Renesas Electronics

2. Package Pinouts

Figure 1 shows the package pinouts for the following packages. Note that the Die in Wafer Form (DWF) option is not shown.

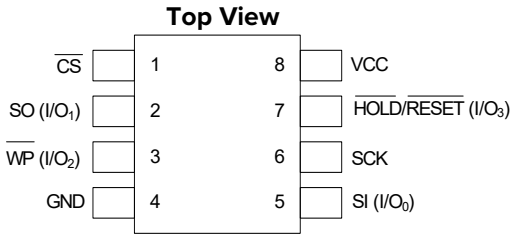

8S1 8-lead SOIC Package (0.150”)

8S2 8-lead EIAJ SOIC Package (0.208”)

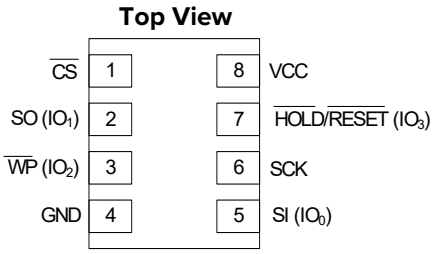

8MA3 8-pad 2 x 3 Ultra-Thin DFN Package

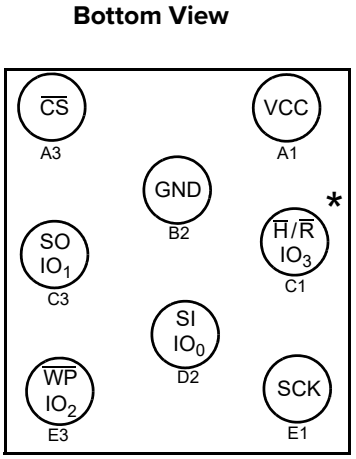

8-ball WLCSP Package

* H/R = HOLD / RESET

Figure 1. Memory Package Types

© 2022 Renesas Electronics

3. Block Diagram

Figure 2 shows a block diagram of the AT25FF081A device. The *Interface Control Logic* block connects to external device through a set of pins. The state of these pins is distributed *Interface Control Logic* block to other blocks as necessary. The design also contains an 8 Mbit serial Flash memory array, a 256-byte SRAM buffer, and an I/*O Interface Unit* that operates depending on the type of data transfer mode.

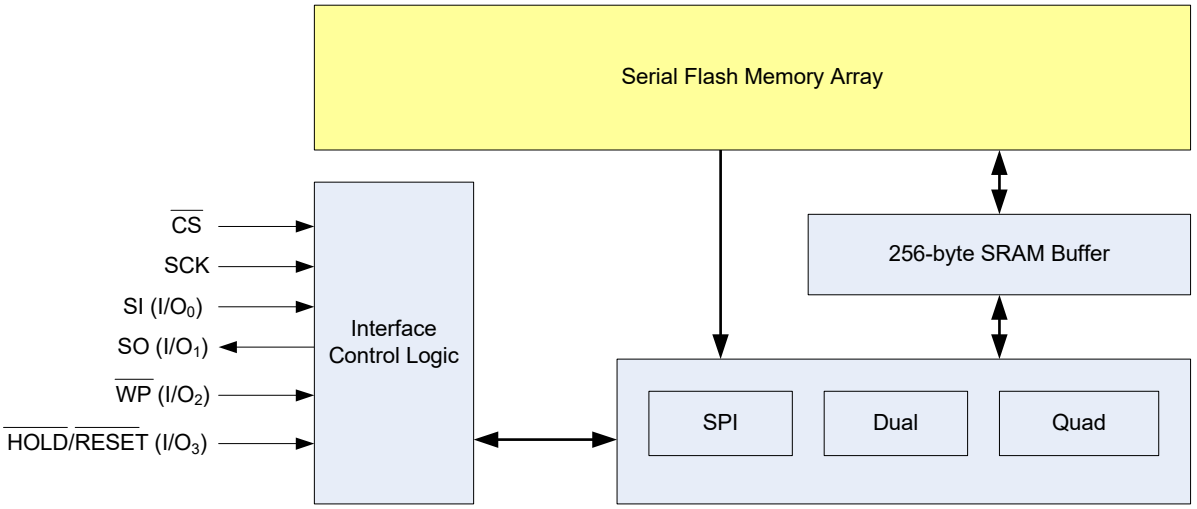

Figure 2. Block Diagram

© 2022 Renesas Electronics

4. Pin Descriptions

Table 1. Pin Descriptions

Symbol	Name and Function	Asserted State	Type
$\overline{CS}$	**CHIP SELECT** Asserting the $\overline{CS}$ pin selects the device. When the $\overline{CS}$ pin is deasserted, the device is be deselected and normally be placed in standby mode (not Deep Power-Down mode), and the SO pin is in a high-impedance state. When the device is deselected, data are not accepted on the SI pin. A high-to-low transition on the $\overline{CS}$ pin is required to start an operation, and a low-to-high transition is required to end an operation. When ending an internally self-timed operation such as a program or erase cycle, the device does not enter the standby mode until the completion of the operation.	Low	Input
SCK	**SERIAL CLOCK** This pin is used to provide a clock to the device and is used to control the flow of data to and from the device. Command, address, and input data present on the SI pin is always latched in on the rising edge of SCK, while output data on the SO pin is always clocked out on the falling edge of SCK.	-	Input
SI (I/O_0)	**SERIAL INPUT** The SI pin is used to shift data into the device. The SI pin is used for all data input including command and address sequences. Data on the SI pin is always latched in on the rising edge of SCK. With the Multi I/O Read commands, the SI pin becomes an output pin (I/O_0) in conjunction with other pins to allow either two or four bits of data on ($I/O_{1:0}$ or $I/O_{3:0}$) to be clocked out on every falling edge of SCK. Data present on the SI pin is ignored whenever the device is deselected ($\overline{CS}$ is deasserted and the device is in the reset condition).	-	Input/ Output
SO (I/O_1)	**SERIAL OUTPUT** The SO pin is used to shift data out from the device. Data on the SO pin is always clocked out on the falling edge of SCK. With the Multi I/O Read commands, the SO pin remains an output pin (I/O_1) in conjunction with other pins to allow either two or four bits of data on ($I/O_{1:0}$ or $I/O_{3:0}$) to be clocked out on every falling edge of SCK. The SO pin is in a high-impedance state whenever the device is deselected ($\overline{CS}$ is deasserted and the device is in the reset condition).	-	Input/ Output
$\overline{WP}$ (I/O_2)	**WRITE PROTECT** The $\overline{WP}$ pin controls the hardware locking feature of the device. When asserted, this bit prevents the Status Register from being written. This bit is used in conjunction with other Status Register bits (CMPRT, BPSIZE, TB, and BP[2:0]) to provide hardware protection of the memory array. The $\overline{WP}$ pin is internally pulled-high and may be left floating if hardware controlled protection is not used. However, it is recommended that the $\overline{WP}$ pin also be externally connected to V_{CC} whenever possible. When the QE bit in Status Register 2 is set, enabling quad mode (Output or I/O), the WP pin becomes bidirectional and functions as the IO_2 pin used to transmit address and/or data, depending on the transfer mode.	Low	Input/ Output

© 2022 Renesas Electronics

Table 1. Pin Descriptions (Cont.)

Symbol	Name and Function	Asserted State	Type
$\overline{HOLD}$/$\overline{RESET}$ (I/O_3)	**$\overline{HOLD}$ / $\overline{RESET}$** The $\overline{HOLD}$ pin is used to temporarily pause serial communication without deselecting or resetting the device. While the $\overline{HOLD}$ pin is asserted, transitions on the SCK pin and data on the SI pin are ignored and the SO pin is placed in a high-impedance state. The $\overline{CS}$ pin must be asserted, and the SCK pin must be in the low state in order for a Hold condition to start. A Hold condition pauses serial communication only and does not have an effect on internally self-timed operations such as a program or erase cycle. With the Quad Output Byte/Page Program command, the $\overline{HOLD}$ pin becomes an input pin (I/O_3) and, along with other pins, allows four bits (on I/O_{3-0}) of data to be clocked in on every rising edge of SCK. With the Quad-Output Read commands, the $\overline{HOLD}$ Pin becomes an output pin (I/O_3) in conjunction with other pins to allow four bits of data on ($I/O3_{3-0}$) to be clocked in on every falling edge of SCK. To maintain consistency with the SPI nomenclature, the $\overline{HOLD}$ (I/O_3) pin is referenced as the $\overline{HOLD}$ pin unless specifically addressing the Quad Output mode in which case it is referenced as I/O_3. The $\overline{HOLD}$ pin is internally pulled-high and may be left floating if the Hold function is not used. However, it is recommended that the $\overline{HOLD}$ pin also be externally connected to V_{CC} whenever possible. When the QE bit in the Status Register is cleared, the IO_3 pin can be configured either as a $\overline{HOLD}$ pin or as a $\overline{RESET}$ pin depending on the state of the HOLD/RESET bit 7 in Status Register 3. Note that when the QE bit is set, the $\overline{HOLD}$ or $\overline{RESET}$ function is not available as this pin is used to transfer data.	Low	Input/ Output
V_{CC}	**DEVICE POWER SUPPLY** The V_{CC} pin is used to supply the source voltage to the device. Operations at invalid V_{CC} voltages may produce spurious results; do not attempt this.	-	Power
GND	**GROUND** The ground reference for the power supply. Connect GND to the system ground.	-	Power

© 2022 Renesas Electronics

5. Device Operation

This section describes the various data transfer modes supported by the device, as well as other system operations.

5.1 Data Transfer Modes

The JEDEC specification uses a numerical system to indicate the type of transfer for a given command. The nomenclature for this system is defined as *(x-y-z)* to indicate the number of active pins used for the command (x), address (y), and data (z). For an example, a designation of 1-1-2 indicates that one pin (SI) is used to transfer the command, one pin (SI) for the address, and two pins (SI and SO) for the data. The AT25FF081A supports the following transfer types.

Table 2. Bus Transfer Types

Transfer Type	Transfer Name	Command	Pin(s) Used for Command	Address	Pin(s) Used for Address	Data	Pin(s) Used for Data
1-0-0	SPI	Yes	SI	No	--	No	--
1-1-0	SPI	Yes	SI	Yes	SI	No	--
1-0-1	SPI	Yes	SI	No	--	Yes	SI (write) SO (read)
1-1-1	SPI	Yes	SI	Yes	SI	Yes	SI (write) SO (read)
1-1-2	Dual Output	Yes	SI	Yes	SI	Yes	SI, SO
1-1-4	Quad Output	Yes	SI	Yes	SI	Yes	SI, SO, $\overline{WP}$, $\overline{HOLD}$
1-4-4	Quad I/O	Yes	SI	Yes	SI, SO, $\overline{WP}$, $\overline{HOLD}$	Yes	SI, SO, $\overline{WP}$, $\overline{HOLD}$
0-4-4	XiP	No	--	Yes	SI, SO, $\overline{WP}$, $\overline{HOLD}$	Yes	SI, SO, $\overline{WP}$, $\overline{HOLD}$

The AT25FF081A supports the transfer formats below, which are described in the following subsections:

- Standard SPI Operation
- Dual Output Operation
- Quad Output Operation
- Quad I/O Operation
- XiP Operation

5.2 Standard SPI Operation

Standard SPI transfers are divided into three elements; command, address, and data. SPI mode support the following four transfer types, as described in Table 2.

- Command only, no address or data (1-0-0)
- Command and address only, no data (1-1-0)
- Command and data only, no address (1-0-1)
- Command, address, and data (1-1-1)

For standard SPI transfers, command and address are always transferred on the SI pin. For write operations, data is also transferred on the SI pin. For read operations, data is transferred on the SO pin.

The AT25FF081A supports the two most common SPI modes, 0 and 3, meaning that data is always latched on the rising edge of SCK and always output on the falling edge of SCK.

© 2022 Renesas Electronics

5.2.1 Command Only, No Address or Data (1-0-0)

The following diagram shows a command-only transfer. In this type of transfer no address or data are required. An example is the *Chip Erase* (60h/C7h) command. A 1-0-0 transfer type is shown in Figure 3.

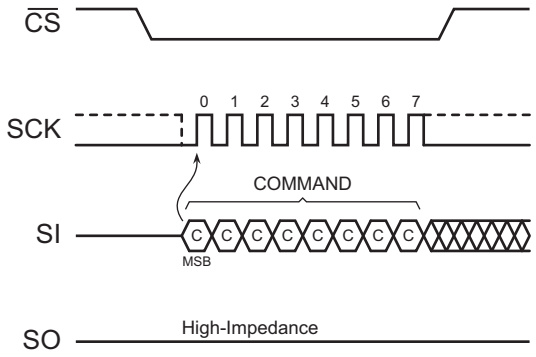

Figure 3. SPI Transfer — Command Only

5.2.2 Command and Address Only, No Data (1-1-0)

The following diagram shows a transfer with command and address only. In this type of transfer no data is required. An example is the *Block Erase* (20h) command, where the address is the location of the block to be erased.

The 1-1-0 transfer type is shown in Figure 4.

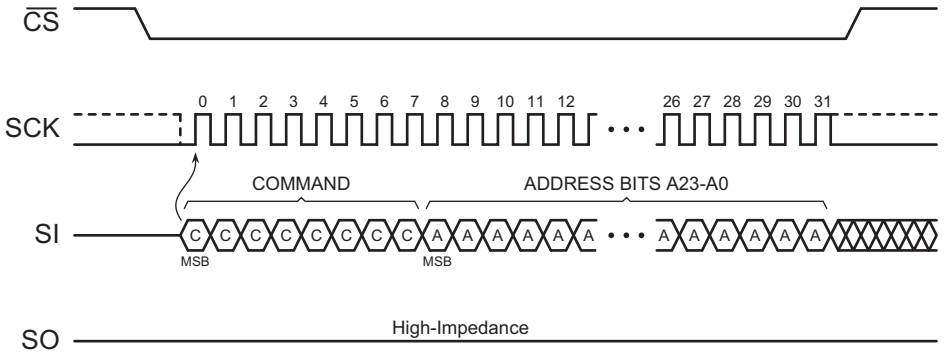

Figure 4. SPI Transfer — Command and Address Only

© 2022 Renesas Electronics

5.2.3 Command and Data Only, No Address (1-0-1)

The following diagrams show a transfer with command and data only (1-0-1). In this type of transfer no address is required. An example is the *Status Register Read* (05h/35h/15h) and *Status Register Write* (01h/31h/11h) commands, where the command itself indicates the location of the register. The 1-0-1 transfer type for a read operation is shown in Figure 5.

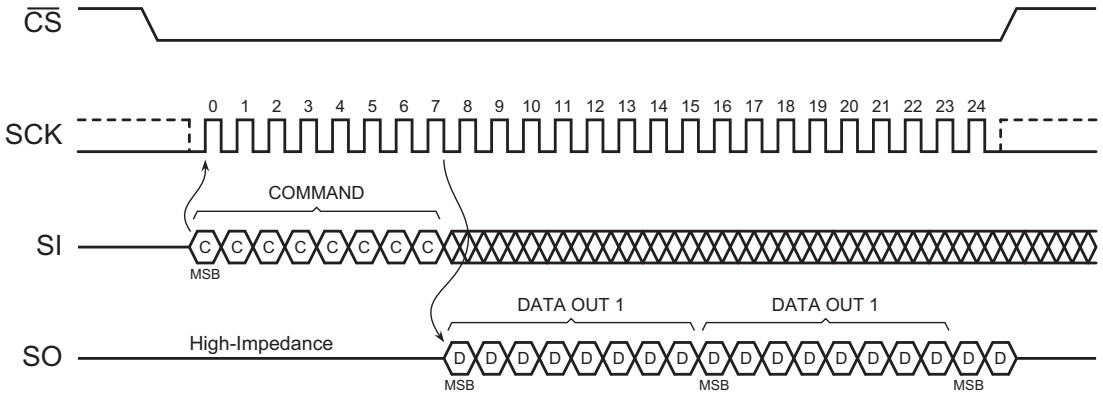

Figure 5. SPI Transfer — Command and Data Only — Read Operation

The 1-0-1 transfer type for a write operation is shown in Figure 6.

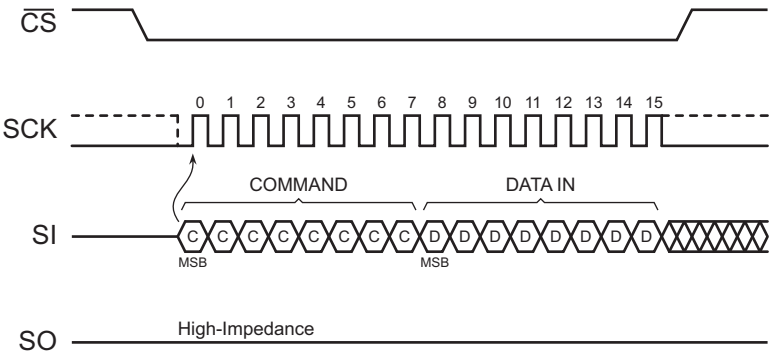

Figure 6. SPI Transfer — Command and Data Only — Write Operation

© 2022 Renesas Electronics

5.2.4 Command, Address, and Data (1-1-1)

Figure 7 shows a command, address, and data transfer. In this type of transfer the command and address are followed by one or more data types, depending on the command type.

Note that this type of transfer may contain one or more dummy bytes between the end of the address and the beginning of the data output depending on the type of command. See Figure 20 for more information.

The 1-1-1 transfer type for a read operation without dummy bytes is shown in Figure 7. An example is the *Read Array* (03h) command.

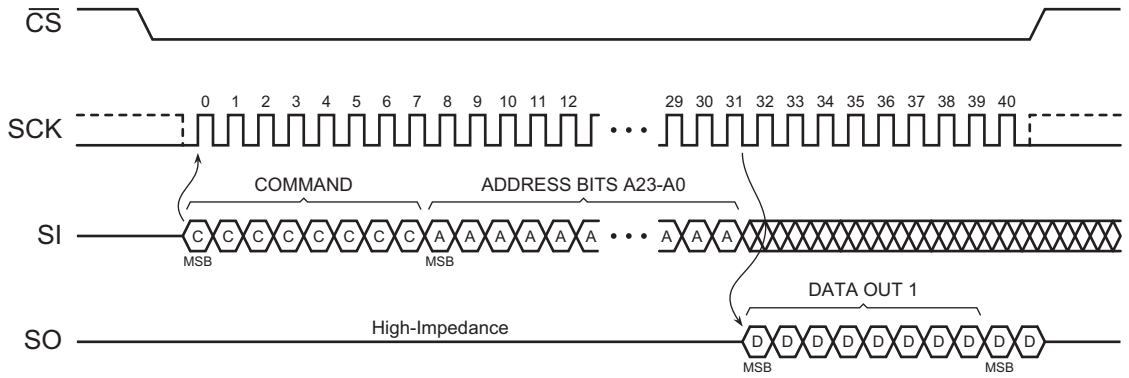

Figure 7. SPI Transfer — Command, Address, and Data — Read Operation with No Dummy Bytes

The 1-1-1 transfer type for a read operation with dummy bytes is shown in Figure 8. An example is the *Fast Read Array* (0Bh) command. Note that eight dummy clocks are shown in the figure below for illustration purposes only. More than eight clocks may be required depending on the type of operation and operating frequency.

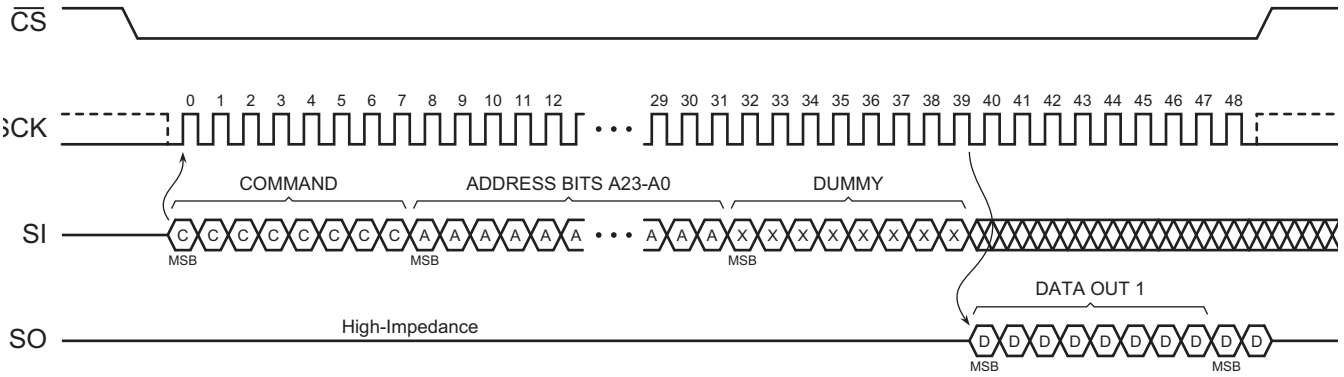

Figure 8. SPI Transfer — Command, Address, and Data — Read Operation with Dummy Bytes

Figure 9 shows the 1-1-1 transfer type for a write operation. An example is the Byte/Page Program (02h) command.

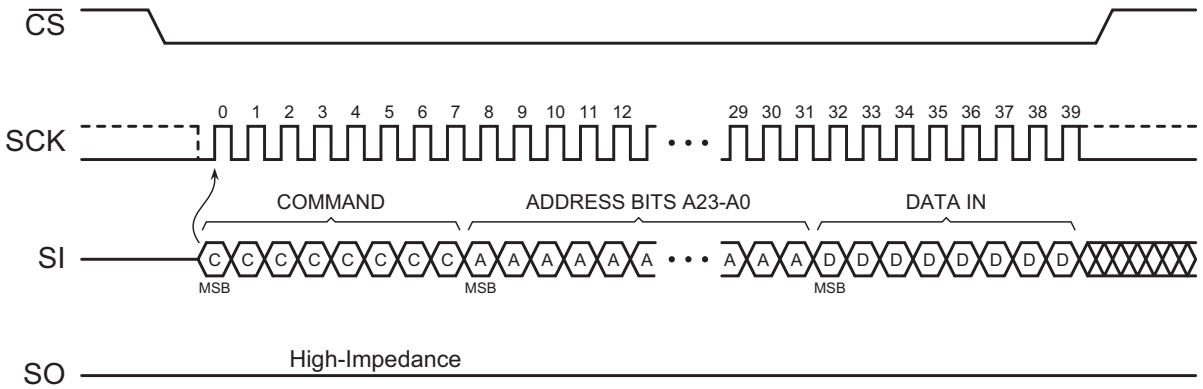

Figure 9. SPI Transfer — Command, Address, and Data — Write Operation

© 2022 Renesas Electronics

5.3 Dual Output Operation (1-1-2)

The AT25FF081A supports the dual output mode (1-1-2) transfer type which enhances overall throughput over the standard SPI mode. This mode transfer command and address on the SI pin like in SPI mode, but the data is transferred on to the SI and SO pins. This means that only half the number of clocks are required to transfer the data.

A dual output read operation is shown in Figure 10. An example of this operation is a *Dual Output Read* (3Bh). Note that this type of transfer may contain one or more dummy bytes between the end of the address and the beginning of the data output depending on the type of command and the operating frequency. For more information, see the Command table in Section 7.

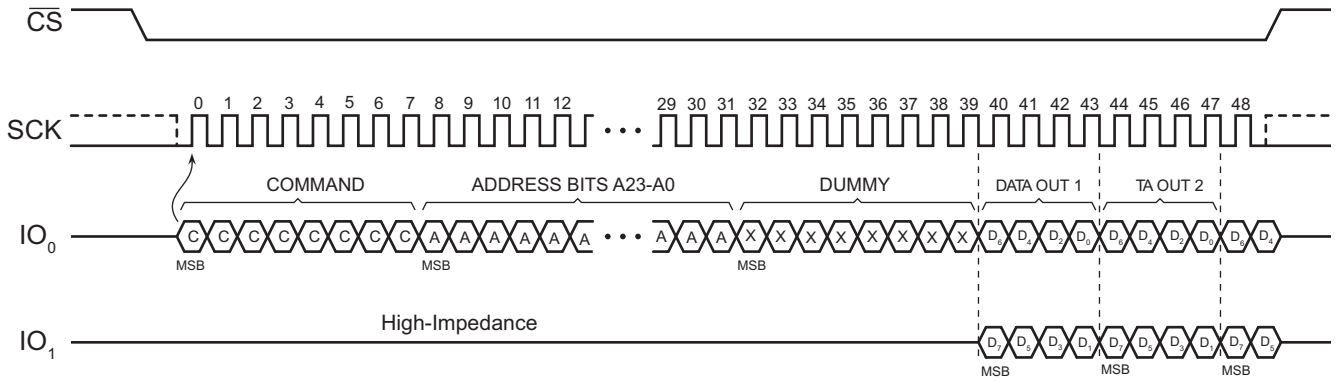

Figure 10. Dual Output Read — 1-Pin Command, 1-Pin Address, and 2-Pin Data

A dual output (1-1-2) write operation is shown in Figure 11. An example of this operation is a *Dual Output Byte/Page Program* (A2h).

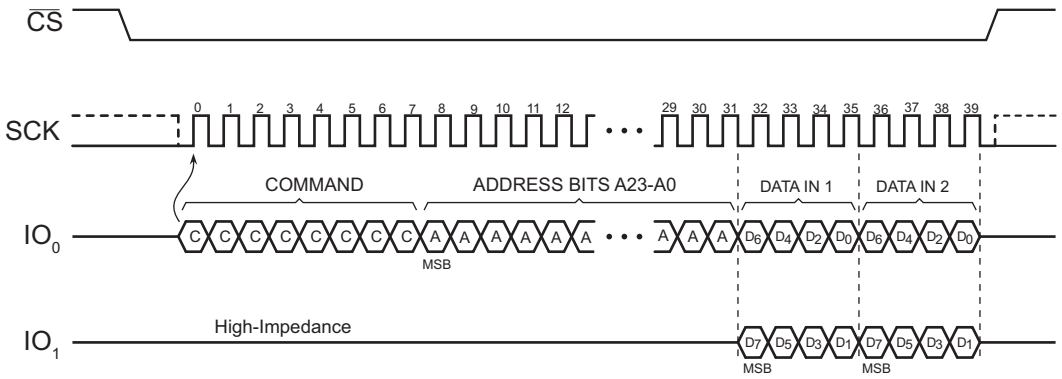

Figure 11. Dual Output Write — 1-Pin Command, 1-Pin Address, and 2-Pin Data

© 2022 Renesas Electronics

5.4 Quad Output Operation (1-1-4)

The AT25FF081A supports the Quad Output which enhances overall throughput over the standard SPI and dual operating modes by increasing the data transfer rate. In this mode, data is transferred on four pins; SI, SO, $\overline{WP}$, and $\overline{HOLD}$. This means that only 1/4th the number of clocks are required to transfer the data relative to standard SPI mode. This is known as a 1-1-4 transfer, which is defined as 1-pin command, 1-pin address, 4-pin data (1-1-4).

In Quad Output the command (C) and address (A) are driven to the memory device on the SI (IO_0) pin. During write operations, the SI (IO_0), SO (IO_1), $\overline{WP}$ (IO_2), and $\overline{HOLD}$ (IO_3) pins switched to inputs and the data is driven on all four pins, allowing four data bits to be transferred on every clock. During read operations, once the command and address are transferred on the SI (IO_0) pin, the SI (IO_0), SO (IO_1), $\overline{WP}$ (IO_2), and $\overline{HOLD}$ (IO_3) pins switched to outputs and the data is driven on all four pins, allowing four data bits to be transferred on every clock.

A 1-1-4 Quad Output read operation is shown in Figure 12. An example of this operation is a *Quad Output Read* (6Bh). Note that this type of transfer may contain one or more dummy bytes between the end of the address and the beginning of the data output depending on the type of command and the operating frequency. See the Command table in Section 7 for more information.

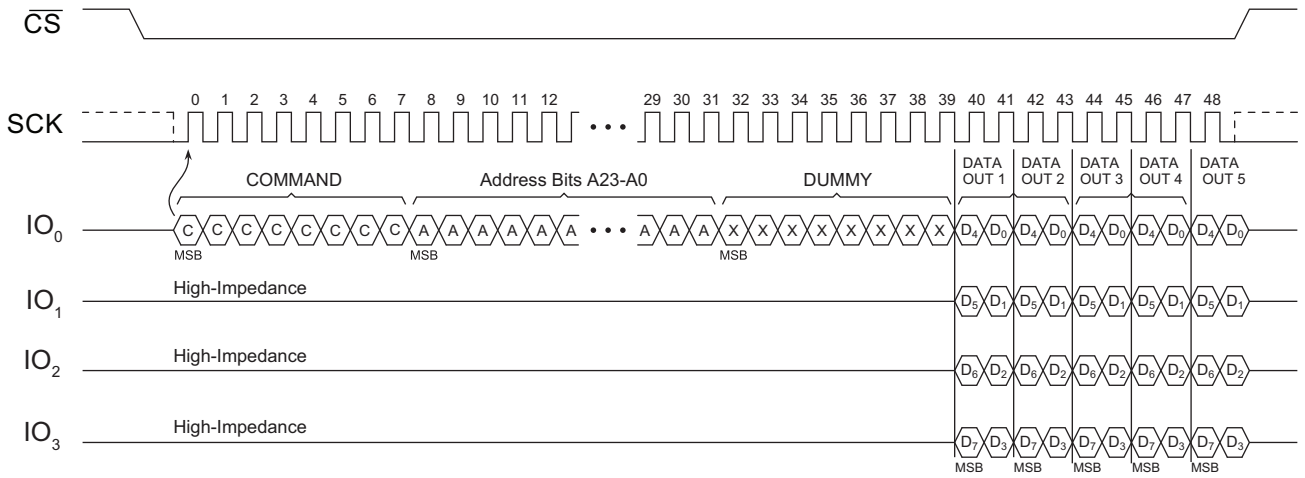

Figure 12. Quad Output Transfer — 1-Pin Command, 1-Pin Address, and 4-Pin Data — Read Operation

A 1-1-4 Quad Output write operation is shown in Figure 13. An example of this operation is a *Quad Output Byte/Page Program* (32h).

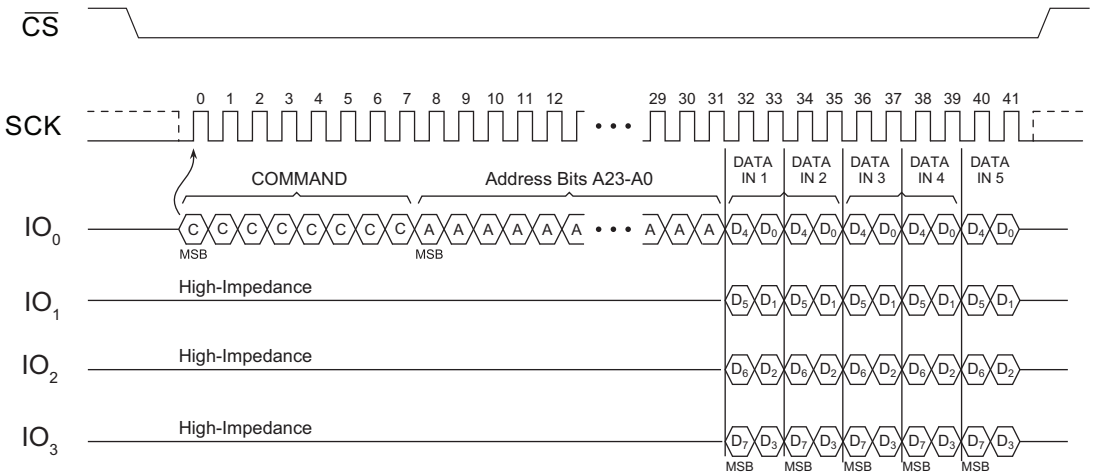

Figure 13. Quad Output Transfer — 1-Pin Command, 1-Pin Address, and 4-Pin Data — Write Operation

© 2022 Renesas Electronics

5.5 Quad I/O Operation (1-4-4)

The AT25FF081A supports the Quad I/O mode which enhances overall throughput over the standard SPI and dual operation modes by increasing the data transfer rate. In this mode, address and data are transferred on four pins; SI, SO, $\overline{WP}$, and $\overline{HOLD}$. This means that only 1/4th the number of clocks are required to transfer the address and data relative to standard SPI mode. This is known as a 1-4-4 transfer which is defined as: 1-pin command, 4-pin address, and 4-pin data (1-4-4).

In Quad I/O mode the command (C) is driven to the memory device on the SI (IO_0) pin. During write operations, the SI (IO_0), SO (IO_1), $\overline{WP}$ (IO_2), and $\overline{HOLD}$ (IO_3) pins switched to inputs and the address and data are driven on all four pins, allowing four bits to be transferred on every clock. During read operations, once the command is transferred on the SI (IO_0) pin, address is transferred on the SI (IO_0), SO (IO_1), $\overline{WP}$ (IO_2), and $\overline{HOLD}$ (IO_3) pins, allowing a 24-bit address to be transferred in only six clocks. Once the address transfer is complete, these pins are switched to outputs and the data is driven on all four pins, allowing four data bits to be transferred on every clock. Note that mode bits M[7:0] must not be in high impedance mode. For optimal performance it is recommended to drive a value of 55h or FFh on these bits when not in XiP mode.

A 1-4-4 quad I/O read operation is shown in Figure 14. An example of this operation is a *Manufacturer/Device ID Read* (94h). Note that this type of transfer may contain one or more dummy bytes between the end of the address and the beginning of the data output depending on the type of command and the operating frequency. See the Table 20 for more information.

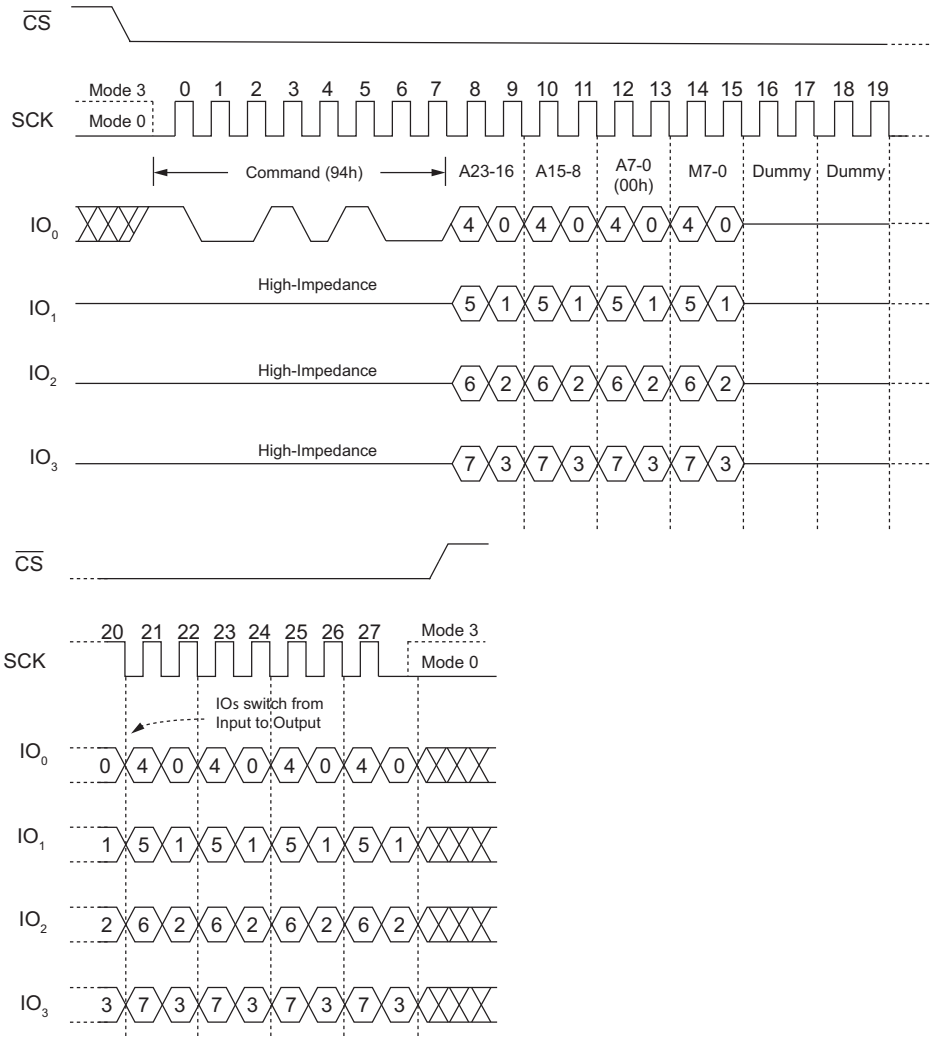

Figure 14. Quad I/O Transfer — 1-Pin Command, 4-Pin Address, and 4-Pin Data — Read Operation

© 2022 Renesas Electronics

5.6 XiP Mode Operation

The XiP mode is similar to the Quad I/O mode in that both the address and data are transferred on all four pins, SI (IO_0), SO (IO_1), $\overline{WP}$ (IO_2), and $\overline{HOLD}$ (IO_3). Using all four pins to transfer address and data allows XiP mode to reduce the overall number of clocks required to complete the operation, thereby streamlining code execution.

The XiP mode is enabled by setting bit 2 (QE) of Status Register 1, and bit 3 (XiP) of Status Register 4. Setting the QE bit enables Quad Output, allowing address and data to be transferred on all four pins. Setting the XiP bit enables continuous read mode, allowing subsequent transfers to occur without the need for driving the command each time, controlled by mode bits M[5:4] as explained below. Therefore, the initial EBh or E7h command requires the command to be driven, but for subsequent transfers the command is not required.

The XiP mode is only used for the following commands:

- EBh: XiP mode initial read (1-4-4)
- EBh: XiP mode subsequent reads (0-4-4)
- E7h: XiP mode initial read with Doubleword Aligned (DWA) address (1-4-4)
- E7h: XiP mode subsequent reads with DWA address (0-4-4)

The only difference between the EBh and E7h commands is that the E7h command is performed only on a double-word aligned address boundary. The EBh command does not have this restriction. Note that mode bits M[7:0] must not be in high-impedance mode. For optimal performance it is recommended to drive a value of 55h or FFh on these bits when not in XiP mode.

The *Set Burst with Wrap* (77h) command does not access the memory directly, but rather is used in conjunction with the EBh and E7h commands to select 8-, 16-, 32-, or 64-Byte sections within a 256-byte page. The user selects the size by programming the wrap bits as part of the 77h command. See the table in Section 7.13, Set Burst Wrap (77h) for more information.

When the EBh/E7h command is driven onto the bus, the associated data immediately following the address contains eight mode bits, known as M[7:0]. Of these bits, M[5:4] are decoded and used by hardware to determine if the device is in XiP continuous read mode. If the value on M[5:4] equals 2'b10, the device is placed into XiP mode to allow for continuous read operations to occur, meaning that for subsequent operations the command field is not required. Each time a subsequent transfer is made, it contains only the address and mode bits.

Initial Transfer and XiP Mode Detection (M[5:4])

The initial XiP transfer follows the 1-4-4 format, where the EBh or E7h command is transferred on the SI (IO_0) pin, and address and data are transferred on the SI (IO_0), SO (IO_1), $\overline{WP}$ (IO_2), and $\overline{HOLD}$ (IO_3) pins. Because all four pins are used, the address requires only six clocks to transfer. The initial 1-4-4 XiP mode transfer is shown in Figure 15.

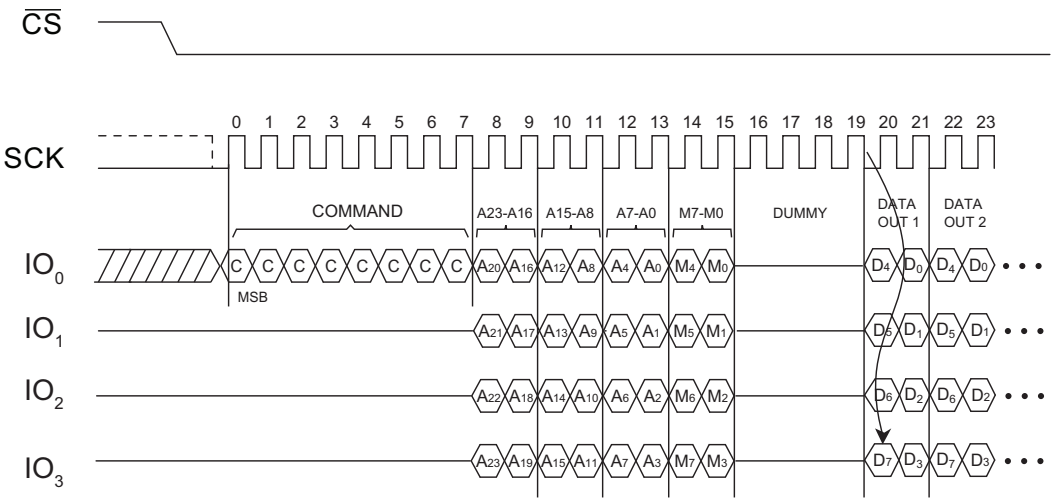

Figure 15. XiP Transfer — 1-Pin Command, 4-Pin Address, and 4-Pin Data — Initial Read (M[5:4] = 2'b10)

© 2022 Renesas Electronics

Subsequent Transfers

Once XiP mode is detected, subsequent operations do not require the command to be transferred. After the data stream starts, the user can deassert the $\overline{CS}$ pin. Once $\overline{CS}$ is deasserted, data output is suspended. Once $\overline{CS}$ is again driven low, only the address and M[7:0] mode data are required because the device is already in XiP mode. Each time a new operation is transferred on the bus, hardware decodes the M[7:0] bits. As long as M[5:4] have a value of 2'b10, the device is in XiP mode and it is not necessary to transfer the command. Once M[5:4] ≠ 2'b10 (any value other than 2'b10), the operation completes and the device exits XiP mode.

A subsequent 0-4-4 XiP mode transfer is shown in Figure 16.

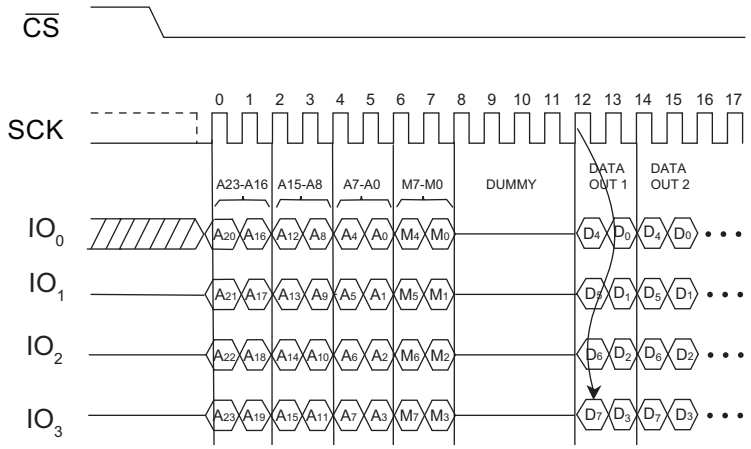

Figure 16. XiP Transfer — 4-Pin Address, and 4-Pin Data — Subsequent Reads (M[5:4] = 2'b10)

Set Burst with Wrap

As mentioned above, the *Set Burst with Wrap* (77h) command is used in conjunction with the EBh and E7h commands to select specific sections within a 256-byte page. When this command is transferred, the data field contains 8 wrap bits. Bits 6:4 of this field determine the wrap length, which can be between 8 and 64 bytes. See Section 7.13, Set Burst Wrap (77h) for more information.

Note that when the device receives the EBh/E7h command with M[5:4] = 2'b10, then the device enters XiP mode. While in the XiP (0-4-4) mode (see Subsequent Transfers subsection above) the only command that the device can execute are EBh (or E7h). This is mandatory since the command field for subsequent transfers does not exist.

During normal operation, the user sends the 77h command before entering XiP mode. If the user wants to issue a 77h command after XiP mode has been entered (to change the wrap length/properties), they must exit the XiP mode by sending a 0-4-4 command with M[5:4] ≠ 2'b10. This exits XiP mode. Then the user can issue the 77h command.

The 77h command is a 1-4-4 XiP mode transfer as shown in Figure 17.

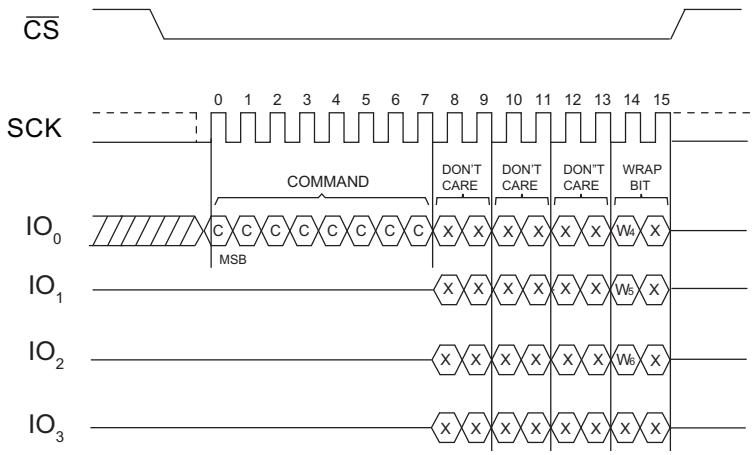

Figure 17. XiP Transfer — Command, 4-Pin Address, and 4-Pin Data — Write Operation

See Section 7.13, Set Burst Wrap (77h) for more information.

© 2022 Renesas Electronics

5.7 Memory Architecture

The memory array of the AT25FF081A memory array is divided into three levels of granularity comprised of blocks and pages:

- 64 kB blocks
- 32 kB blocks
- 4 kB blocks

The size of the erase blocks is optimized for both code and data storage applications, allowing both code and data segments to reside in their own erase regions.

Table 3 shows the breakdown of each level and details the number of pages per block. The program operations to the memory array can be done at the full page level or at the byte level (a variable number of bytes). Erase operations can be performed at the chip or block level.

Table 3. AT25FF081A Device Block Memory Map

64 kB Block Erase (D8h)	32 kB Block Erase (52h)	4 kB Block Erase (20h)[1]	Block Address Range
64 kB (block 15)	32 kB (block 31)	4 kB (B255)	0FF000h - 0FFFFFh
		4 kB (B254)	0FE000h - 0FEFFFh
		4 kB (B253)	0FD000h - 0FDFFFh
		4 kB (B252)	0FC000h - 0FCFFFh
		4 kB (B251)	0FB000h - 0FBFFFh
		4 kB (B250)	0FA000h - 0FAFFFh
		4 kB (B249)	0F9000h - 0F9FFFh
		4 kB (B248)	0F8000h - 0F8FFFh
	32 kB (block 30)	4 kB (B247)	0F7000h - 0F7FFFh
		4 kB (B246)	0F6000h - 0F6FFFh
		4 kB (B245)	0F5000h - 0F5FFFh
		4 kB (B244)	0F4000h - 0F4FFFh
		4 kB (B243)	0F3000h - 0F3FFFh
		4 kB (B242)	0F2000h - 0F2FFFh
		4 kB (B241)	0F1000h - 0F1FFFh
		4 kB (B240)	0F0000h - 0F0FFFh
64 kB (block 14) to 64 kB (block 1)	32 kB (block 29) to 32 kB (block 2)	4 kB (B239) to 4 kB (B16)	0EF000h - 0EFFFFh to 010000h - 010FFFh
64 kB (block 0	32 kB (block 1)	4 kB (B15)	00F000h - 00FFFFh
		4 kB (B14)	00E000h - 00EFFFh
		4 kB (B13)	00D000h - 00DFFFh
		4 kB (B12)	00C000h - 00CFFFh
		4 kB (B11)	00B000h - 00BFFFh
		4 kB (B10)	00A000h - 00AFFFh
		4 kB (B9)	009000h - 009FFFh
		4 kB (B8)	008000h - 008FFFh
	32 kB (block 0)	4 kB (B7)	007000h - 007FFFh
		4 kB (B6)	006000h - 006FFFh
		4 kB (B5)	005000h - 005FFFh
		4 kB (B4)	004000h - 004FFFh
		4 kB (B3)	003000h - 003FFFh
		4 kB (B2)	002000h - 002FFFh
		4 kB (B1)	001000h - 001FFFh
		4 kB (B0)	000000h - 000FFFh

1. B = Block

© 2022 Renesas Electronics

Table 4 shows how one 4 kB block maps to sixteen 256 byte pages. The very top and bottom block ranges are shown.

Table 4. AT25FF081A Device Block Memory Map — Page Program

4 kB Blocks		256 Byte Page	1 - 256 Byte Page Program (02h)
4 kB (B255)		256 Bytes	0FFF00h - 0FFFFFh
4 kB (B254)		256 Bytes	0FFE00h - 0FFEFFh
4 kB (B253)		256 Bytes	0FFD00h - 0FFDFFh
4 kB (B252)		256 Bytes	0FFC00h - 0FFCFFh
4 kB (B251)		256 Bytes	0FFB00h - 0FFBFFh
4 kB (B250)		256 Bytes	0FFA00h - 0FFAFFh
4 kB (B249)		256 Bytes	0FF900h - 0FF9FFh
4 kB (B248)		256 Bytes	0FF800h - 0FF8FFh
4 kB (B247)		256 Bytes	0FF700h - 0FF7FFh
4 kB (B246)		256 Bytes	0FF600h - 0FF6FFh
4 kB (B245)		256 Bytes	0FF500h - 0FF5FFh
4 kB (B244)		256 Bytes	0FF400h - 0FF4FFh
4 kB (B243)		256 Bytes	0FF300h - 0FF3FFh
4 kB (B242)		256 Bytes	0FF200h - 0FF2FFh
4 kB (B241)		256 Bytes	0FF100h - 0FF1FFh
4 kB (B240)		256 Bytes	0FF000h - 0FF0FFh
4 kB (B239) to 4 kB (B16)	. . .	. . .	. . .
4 kB (B15)		256 Bytes	000F00h - 000FFFh
4 kB (B14)		256 Bytes	000E00h - 000EFFh
4 kB (B13)		256 Bytes	000D00h - 000DFFh
4 kB (B12)		256 Bytes	000C00h - 000CFFh
4 kB (B11)		256 Bytes	000B00h - 000BFFh
4 kB (B10)		256 Bytes	000A00h - 000AFFh
4 kB (B9)		256 Bytes	000900h - 0009FFh
4 kB (B8)		256 Bytes	000800h - 0008FFh
4 kB (B7)		256 Bytes	000700h - 0007FFh
4 kB (B6)		256 Bytes	000600h - 0006FFh
4 kB (B5)		256 Bytes	000500h - 0005FFh
4 kB (B4)		256 Bytes	000400h - 0004FFh
4 kB (B3)		256 Bytes	000300h - 0003FFh
4 kB (B2)		256 Bytes	000200h - 0002FFh
4 kB (B1)		256 Bytes	000100h - 0001FFh
4 kB (B0)		256 Bytes	000000h - 0000FFh

© 2022 Renesas Electronics

5.8 Memory Protection

The AT25FF081A device incorporates a robust memory protection scheme that allows memory locations to be protected down to the 4 kB block level. The device provides the ability to globally lock all blocks in one operation, or to lock individual blocks on a per-block basis.

5.8.1 Standard Memory Protection

The standard memory protection scheme is invoked by clearing bit 2 (WPS) of Status Register 3. When this bit is cleared, the AT25FF081A uses a combination of the following register fields to set the memory protection scheme:

- CMPRT: When this bit is set, unprotected areas of memory become protected, and protected areas of memory become unprotected. For example, when CMPRT = 0, a top 64 kB block can be protected while the rest of the array is not; when CMP = 1, the same 64 kB block becomes unprotected while the rest of the array becomes read-only. See bit 6 of Section 6.4, Status Register 2 for more information.
- BPSIZE: This bit works in conjunction with bits 4:2 (BP[2:0]) in Status Register 1 to determine the size of the blocks to be protected. Block sizes of 4 kB and 64 kB can be protected depending on the state of this bit. See bit 6 of Section 6.3, Status Register 1 for more information.
- TB: This bit indicates if the protection is from the bottom up or the top down of the memory. See bit 5 of Section 6.3, Status Register 1 for more information.
- BP[2:0]: This field can be programmed to protect all of the memory array, none of the memory array, or a portion of the memory array. When that portion of the memory if protected, it is protected from the program and erase commands. See bit 4:2 of Section 6.3, Status Register 1 for more information.

The protection scheme differs based on the setting of the CMPRT bit described above. Table 5 shows the relationship between the BPSIZE, BP[2:0], and TB bits when CMPRT = 0. The right-most column shows the protected address range. All addresses not shown are unprotected.

© 2022 Renesas Electronics

Table 5. AT25FF081A Device Block Protection Map — CMPRT = 0, WPS = 0

CMPRT	BPSIZE	TB	BP[2:0]	Protected Address Range
0	0	0	3'b000	NONE
0	0	0	3'b001	0F0000h - 0FFFFFh
0	0	0	3'b010	0E0000h - 0FFFFFh
0	0	0	3'b011	0C0000h - 0FFFFFh
0	0	0	3'b100	080000h - 0FFFFFh
0	0	0	3'b101	000000h - 0FFFFFh
0	0	0	3'b110	000000h - 0FFFFFh
0	0	0	3'b111	000000h - 0FFFFFh
0	0	1	3'b000	NONE
0	0	1	3'b001	000000h - 00FFFFh
0	0	1	3'b010	000000h - 01FFFFh
0	0	1	3'b011	000000h - 03FFFFh
0	0	1	3'b100	000000h - 07FFFFh
0	0	1	3'b101	000000h - 0FFFFFh
0	0	1	3'b110	000000h - 0FFFFFh
0	0	1	3'b111	000000h - 0FFFFFh
0	1	0	3'b000	NONE
0	1	0	3'b001	0FF000h - 0FFFFFh
0	1	0	3'b010	0FE000h - 0FFFFFh
0	1	0	3'b011	0FC000h - 0FFFFFh
0	1	0	3'b100	0F8000h - 0FFFFFh
0	1	0	3'b101	0F8000h - 0FFFFFh
0	1	0	3'b110	000000h - 0FFFFFh
0	1	0	3'b111	000000h - 0FFFFFh
0	1	1	3'b000	NONE
0	1	1	3'b001	000000h - 000FFFh
0	1	1	3'b010	000000h - 001FFFh
0	1	1	3'b011	000000h - 003FFFh
0	1	1	3'b100	000000h - 007FFFh
0	1	1	3'b101	000000h - 007FFFh
0	1	1	3'b110	000000h - 0FFFFFh
0	1	1	3'b111	000000h - 0FFFFFh

© 2022 Renesas Electronics

Table 6 shows the relationship between the BPSIZE, BP[2:0], and TB bits when CMPRT = 1.

Table 6. AT25FF081A Device Block Protection Map — CMPRT = 1, WPS = 0

CMPRT	BPSIZE	TB	BP[2:0]	Protected Address Range
1	0	0	3'b000	000000h - 0FFFFFh
1	0	0	3'b001	000000h - 0EFFFFh
1	0	0	3'b010	000000h - 0DFFFFh
1	0	0	3'b011	000000h - 0BFFFFh
1	0	0	3'b100	000000h - 07FFFFh
1	0	0	3'b101	NONE
1	0	0	3'b110	NONE
1	0	0	3'b111	NONE
1	0	1	3'b000	000000h - 0FFFFFh
1	0	1	3'b001	010000h - 0FFFFFh
1	0	1	3'b010	020000h - 0FFFFFh
1	0	1	3'b011	040000h - 0FFFFFh
1	0	1	3'b100	080000h - 0FFFFFh
1	0	1	3'b101	NONE
1	0	1	3'b110	NONE
1	0	1	3'b111	NONE
1	1	0	3'b000	000000h - 0FFFFFh
1	1	0	3'b001	000000h - 0FEFFFh [1] [2]
1	1	0	3'b010	000000h - 0FDFFFh [1] [2]
1	1	0	3'b011	000000h - 0FBFFFh [1] [2]
1	1	0	3'b100	000000h - 0F7FFFh [2]
1	1	0	3'b101	000000h - 0F7FFFh [2]
1	1	0	3'b110	NONE
1	1	0	3'b111	NONE
1	1	1	3'b000	000000h - 0FFFFFh
1	1	1	3'b001	001000h - 0FFFFFh [3] [4]
1	1	1	3'b010	002000h - 0FFFFFh [3] [4]
1	1	1	3'b011	004000h - 0FFFFFh [3] [4]
1	1	1	3'b100	008000h - 0FFFFFh [4]
1	1	1	3'b101	008000h - 0FFFFFh [4]
1	1	1	3'b110	NONE
1	1	1	3'b111	NONE

1. When the 32 kB Erase command is used, the protected region is 0x00_0000 - 0x0F_7FFF.
2. When the 64 kB Erase command is used, the protected region is 0x00_0000 - 0x0E_FFFF.
3. When the 32 kB Erase command is used, the protected region is 0x00_8000 - 0x0F_FFFF.
4. When the 64 kB Erase command is used, the protected region is 0x01_0000 - 0x0F_FFFF.

5.8.2 Individual Block Lock and Unlock

In addition to the standard protection scheme described in the previous subsection, the AT25FF081A device also provides the ability to lock individual memory locations. Protection of memory locations can be applied individually using the *Individual Block Lock* (36h) command and the *Individual Block Unlock* (39h) command. Note that in the AT25FF081A device all lock bits are set by default, making all memory locations protected. The user must execute a series of one or more *Individual Block Unlock* (39h) commands to unlock the desired memory locations.

The individual memory protection scheme is invoked by setting bit 2 (WPS) of Status Register 3. When this bit is set, the AT25FF081A uses the *Individual Block Lock* (36h) command that provides the address of the 4 kB or 64 kB block to be locked. See Table 17 for more information on the WPS bit.

© 2022 Renesas Electronics

Figure 3 above shows the address ranges for each 4 kB block corresponding to the top and bottom 64 kB blocks of the memory map. The appropriate 24-bit address is driven on the SI pin after the 36h command. After decoding the command, hardware reads the address and sets the appropriate lock bit for that 4 kB block.

Note that the ability to lock 4 kB blocks only applies to the top and bottom 64 kB blocks of the map. This corresponds to blocks 0 and 15. For 64 kB blocks 1 - 14, the blocks can only be locked on the 64 kB boundary (1 lock bit per 64 kB). This equates to a total of 46 lock bits;

- 16 bits, one per 4 kB sub-block in the top 64 kB block
- 16 bits, one per 4 kB sub-block in the bottom 64 kB block
- 14 bits, one each for 64 kB blocks 1 - 14

See Section 7.17, Individual Block Lock (36h) and Section 7.18, Individual Block Unlock (39h) for more information.

5.8.3 Global Block Lock and Unlock

In addition to individual block protection of memory locations, as described in the previous subsection, the AT25FF081A also allows for the blocks to be locked and unlocked globally using the *Global Block Lock* (7Eh) and the *Global Block Unlock* (98h) commands. The user must execute a *Global Unlock Block* command to unlock the memory locations.

Note that in the AT25FF081A the factory default setting is the Standard Memory Protection scheme; therefore, all memory locations are unprotected.

See Section 7.20, Global Block Lock (7Eh) and Section 7.21, Global Block Unlock (98h) for more information.

5.8.4 Reading the State of the Lock Bits

In addition to globally or individually locking and unlocking selected memory blocks as described above, the AT25FF081A device allows the user to poll any block in memory to determine if it has been locked. This is accomplished by executing either the 3Ch or 3Dh command, along with the 24-bit address. Both of these commands perform the exact same operation and can be used interchangeably.

Once this information is decoded, hardware fetches the 8-bit lock field from the requested location and outputs this information onto the SO pin. The most significant bit (MSB) of the value is transferred first, and the least significant bit (LSB) is transferred last. If the LSB is 1, the corresponding block is locked and no erase or program operation can be executed to that block. If the LSB is 0, the block or section is unlocked and program/erase operations are allowed. See Section 7.19, Read Block Lock (3Ch/3Dh) for more information.

5.9 Power-Down Considerations

The AT25FF081A device supports the *Deep Power-Down* (B9h) and *Ultra Deep Power-Down* (79h/B9h) modes. Also, bit 7 (PDM) of Status Register 4 (SR4) can be used to select either of these modes using the B9h command. The 79h command is provided for backward compatibility.

There are three ways to enter power-down mode:

1. Set the PDM bit in SR4 (logic 1) and execute the B9h command to place the device into Deep Power-Down (DPD) mode. In this mode it is possible to execute the *Resume from Power-Down* (ABh) command or *Enable Reset* (66h) and *Reset Device* (99h) commands in order to exit DPD mode. The device could also be reset by JEDEC reset, hardware reset, or power-on-reset in order to exit DPD mode. The exit from DPD mode time is defined by the t_{RDPD} timing parameter in the AC specifications section of this document. See Section 5.9.2 below. Note that in the AT25FF081A device, simply deasserting $\overline{CS}$ as in other devices does not exit DPD mode.
2. Clear the PDM bit in SR4 (logic 0) and execute the B9h command to place the device into Ultra Deep Power-Down (UDPD) mode. To exit this mode, it is necessary to execute the *Resume from Ultra-Deep Power-Down* (ABh) command or a JEDEC reset, hardware reset, or power-on-reset to initiate an internal reset of the device. The resume from UDPD mode recovery time is defined by the t_{RUDPD} timing parameter in the AC specifications section of this document. See Section 5.9.2 below. Note that in the AT25FF081A device, simply deasserting $\overline{CS}$ as in other devices does NOT exit UDPD mode.

© 2022 Renesas Electronics

3. Execute the 79h command to place the device into Ultra Deep Power-Down (UDPD) mode. If this command is used, the state of the PDM bit in SR4 is ignored. This mode allows for software backward compatibility. A device reset is required to exit UPDP mode. In this mode it is necessary to execute the *Resume from Ultra-Deep Power-Down* (ABh) command or a JEDEC reset, hardware reset or power-on-reset to initiate an internal reset of the device. The exit from UDPD mode recovery time is defined by the t_{RUDPD} timing parameter in the AC specifications section of this document. See Section 5.9.2 below for more information on exiting power-down mode.

5.9.1 Entering Power-Down Mode

The conditions for entering DPD or UDPD mode are shown in the Table 7. The PDM column indicates the state of the Power-Down Mode bit in Status Register 4.

Table 7. Entering DPD or UDPD Mode

Command	PDM bit	Power-Down Mode	Power-Down Exit Recovery Time
B9h	1	Deep Power-Down	Short
B9h	0	Ultra Deep Power-Down	Long
79h	x	Ultra Deep Power-Down	Long

5.9.2 Exiting Power-Down Mode

The following methods can be used to exit DPD or UDPD mode.

Table 8. Exiting DPD or UDPD Mode

Command	PDM bit	Power-Down Mode	Exit Command	Power On Reset	JEDEC Reset	Hardware Reset Pin [1]	66h/99h Command	Terminate (F0h)	Status After Exit
B9h	1	DPD	ABh [2]	Y	Y	Y	Y	N	Idle
B9h	0	UDPD	ABh [3]	Y	Y	Y	N	N	Idle
79h	x	UDPD	ABh [3]	Y	Y	Y	N	N	Idle

1. Hardware reset function must be enabled by software before entering the Power-Down mode. See bit 7 of Status Register 3.
2. Executing the ABh command in DPD mode returns the device to an idle state. The SRAM contents are retained.
3. Executing the ABh command in UDPD mode causes the device to initiate an internal reset sequence.The SRAM contents are undefined.

ABh Command

Executing the ABh command while in the Deep Power-Down (DPD) mode causes the device to exit DPD and return back to an idle state. This command does not reset the device and no data is lost. Executing the ABh command while in the Ultra-Deep Power-Down (UDPD) mode causes the device to perform an internal reset.

Device Resets

In addition to the ABh command described above, performing a Power On Reset (POR), a JEDEC reset, or asserting the hardware reset pin ($\overline{\text{RESET}}$) also causes the device to exit DPD or UDPD mode.

Enable Reset (66h) / Reset (99h) Command

As shown in Table 8, the 66h/99h reset command is accepted in DPD mode. The device does not exit UDPD mode, regardless of whether the device entered UDPD mode using the B9h command or the 79h command. To exit UDPD mode, the device must be reset as described in the previous subsections.

Terminate Command (F0h)

The *Terminate* (F0) command does not cause exit from DPD or UDPD modes. To exit DPD or UDPD mode still requires either the ABh command, or resetting the device as described in the previous subsections.

© 2022 Renesas Electronics

5.9.3 Reset During Program and Erase Commands

The AT25FF081A device supports the following program and erase operations.

Program operations include:

- Byte/Page Program (02h)
- Sequential Program (AFh/ADh)
- Dual Output Byte/Page Program (A2h)
- Quad Output Byte/Page Program (32h)
- Program Security Register (9Bh)

Erase operations include:

- 4 kB Block Erase (20h)
- 32 kB Block Erase (52h)
- 64 kB Block Erase (D8h)
- Chip Erase (60h/C7h)

These commands are affected when resetting the device as shown in Table 9. In this table, a ‘Y’ entry indicates that the device is reset when that type of reset occurs during the corresponding command. A ‘N’ entry indicates that the operation is terminated, but the device is not reset. For example, when the F0h command is executed during a program or erase operation, the operation is halted, but the device is not reset.

Table 9. Resetting the Device During a Program or Erase Operation

Command Type	Power On Reset	JEDEC Reset	Hardware Reset Pin	66h/99h Command	Terminate (F0h)
Program	Y	Y	Y	Y	N
Erase	Y	Y	Y	Y	N

© 2022 Renesas Electronics

5.10 Erase/Program Suspend Considerations and Nested Operations

The AT25FF081A device provides three Status Register bits to manage program and erase suspend operations.

- SUSP — Status Register 2, bit 7. The SUSP bit is set by hardware and indicates that the program or erase operation has been suspended.
- ES — Status Register 5, bit 3. The ES bit is set by hardware whenever an erase operation is suspended.
- PS — Status Register 5, bit 2. The PS bit is set by hardware whenever a program operation is suspended.

These three bits work in conjunction to define the state of a suspend operation as shown in Table 10.

In this table, the SUSP is a logical OR of the ES and PS bits. When either the ES or PS bit is set, the SUSP bit is set. When both of the ES and PS bits are cleared, the SUSP bit is cleared.

These bits relate to the flow diagram in Figure 18 below as follows: when the erase operation is suspended, hardware sets the ES bit. When the program operation is suspended, hardware sets the PS bit. Once the program operation is complete, hardware clears the PS bit. Finally, when the erase operation is completed, hardware clears the ES bit.

Table 10. Encoding of Erase/Program Suspend Operations

SUSP	ES	PS	Status
0	0	0	No suspend operation in progress.
1	0	1	Program suspend operation in progress.
1	1	0	Erase suspend operation in progress.
1	1	1	Nested erase/program suspend operation in progress.

5.10.1 Nested Operations

The AT25FF081A device supports nested erase and program suspend operations. An erase operation can be suspended and a program operation started. This operation can then also be suspended and another operation commenced, such as a read. After the read operation is complete, the program operation can be resumed. Once the program operation is completed, the erase operation can be resumed. Nested operations adhere to the following constraint:

- Suspending an erase operation followed by a program operation is supported
- Suspending a program operation followed by an erase operation is NOT supported

The erase operation must be suspended first, followed by suspension of the program operation.

Figure 18 shows an example flow diagram of a nested operation.

© 2022 Renesas Electronics

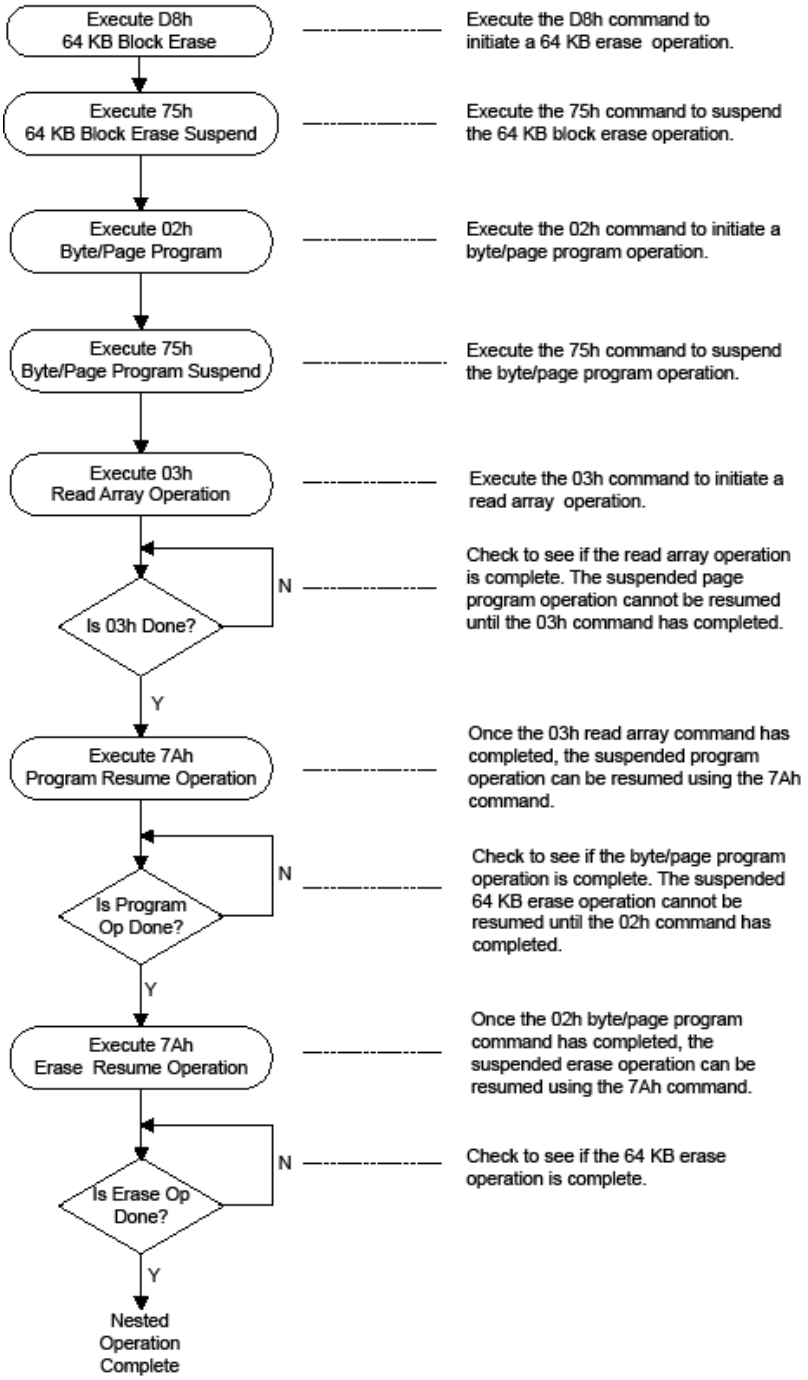

Figure 18. Flow Diagram of Nested Operations Example

5.10.2 Program and Erase Errors

The AT25FF081A device provides two Status Register bits to indicate program and erase errors.

- EE — Status Register 4, bit 4. The EE bit is set by hardware whenever an error occurs during an erase operation
- PE — Status Register 4, bit 5. The PE bit is set by hardware whenever an error occurs during a program operation

When a new program or erase command is accepted by the device, hardware clears the EE or PE bits respectively depending on the command. The device clears the EE bit when a new *Block Erase* or *Chip Erase* command is accepted. The device clears the PE bit when a new *Byte/Page Program, Sequential Programming,*

© 2022 Renesas Electronics

Program OTP Security Register, Write Status Register, or *Status Register Lock* command is accepted. If an error is detected during the command execution, then the EE or PE flag is set. These flags hold their contents even if the program/erase operation is suspended. Note that the Resume command does not change the state of the EE and PE bits. If a *Terminate* command is issued while the device is busy (executing program/erase), then the PE or EE flag is set.

The PE and EE bits are volatile, meaning that any reset operation clears these bits. The ABh command is used to exit Deep Power-Down (DPD) or Ultra-Deep Power-Down (UDPD) mode. If the device is in DPD mode and the user issues the ABh command, then the device exits DPD mode but does not change the state of the PE and EE bits. However, if the ABh command is executed and the device exits from UDPD mode, then the device initiates a reset, which causes both the PE and EE bits to be cleared.

When an error occurs during a given command, the EE and PE bits are set as shown in Table 11. Note that for any of the commands where a 'Yes' appears in the EE or PE columns, when a new command is issued, the EE or PE bit is cleared. Therefore, when the bit is set initially due to an error being detected, it is incumbent on software to detect when these bits are set and take the necessary steps to determine the exact error.

Table 11. Command Errors and Their Effect on the EE and PE Bits

Command Name	Command Code	Sets the EE Bit	Sets the PE Bit
Read Array	03h, 3Bh, 6Bh, EBh, E7h	No	No
Block Erase	20h, 52h, D8h	Yes	No
Chip Erase	60h, C7h	Yes	No
Byte/Page Program	02h, A2h, 32h	No	Yes
Sequential Programming	ADh, AFh	No	Yes
Program/Erase Suspend	B0h, 75h	No	No
Program/Erase Resume	D0h, 7Ah	No	No
Write Enable	06h	No	No
Write Disable	04h	No	No
Volatile Write Enable	50h	No	No
Individual Block Lock	36h	No	No
Individual Block Unlock	39h	No	No
Global Block Lock	7Eh	No	No
Global Block Unlock	98h	No	No
Read Block Lock Status	3Ch, 3Dh	No	No
Program OTP Security Register	9Bh	No	Yes
Read OTP Security Register	4Bh	No	No
Read Status Registers (direct)	05h, 35h, 15h	No	No
Read Status Registers (indirect)	65h	No	No
Write Status Registers (direct)	01h, 31h, 11h	No	Yes
Write Status Registers (indirect)	71h	No	Yes
Status Register Lock	6Fh	No	Yes
Terminate	F0h	Yes (if Erase command is terminated)	Yes (if Program command is terminated)
Enable Reset	66h	No	No
Reset Device	99h	Cleared on POR	Cleared on POR
Read Mfg ID and Device ID	9Fh, 90h, 94h	No	No
Deep Power-Down	B9h	No	No
Resume from Deep Power-Down	ABh	No	No
Resume from Ultra Deep Power-Down	ABh	Cleared on POR	Cleared on POR

© 2022 Renesas Electronics

Table 11. Command Errors and Their Effect on the EE and PE Bits (Cont.)

Command Name	Command Code	Sets the EE Bit	Sets the PE Bit
Ultra Deep Power-Down	79h	No	No
Read SFDP	5Ah	No	No
Set Burst with Wrap	77h	No	No

5.10.3 Suspending and Terminating a Program or Erase Operation

Program Operation

A self-timed program operation can be suspended using the *Suspend* (75h) command and terminated using the *Terminate* (F0h) command. The device responds to either of these commands by initiating a sequence which completes some internal sub-operations, brings the internal voltage supplies to their quiescent state, saves the intermediate address counters and states, and sets either the PS (Program Suspend) bit in Status Register 4 in the case of a *Suspend* command, or the PE (Program Error) bit in Status Register 5 in case of the *Terminate* command.

When the user issues the *Suspend* command, the device requires a period of time equal to t_{SUS} before the BUSY flag goes low and the PS flag goes high. Similarly, when the user issues the *Terminate* command the device requires a period of time equal to t_{SWTERM} before the BUSY flag goes low and the PE flag goes high.

If the user issues the *Suspend* command, and then issues the *Terminate* command before the device has completed the internal suspend operation, the device honors the *Terminate* command and sets the PE flag. The PS flag is not set, and the BUSY flag is cleared. At this point the self-timed command that was terminated cannot be resumed, and the region of the memory that was being programmed/erased is left in an intermediate state.

Erase Operation

A self-timed erase operation can be suspended using the *Suspend* (75h) command and terminated using the *Terminate* (F0h) command. The device responds to either of these commands by initiating a sequence which completes some internal sub-operations, brings the internal voltage supplies to their quiescent state, saves the intermediate address counters and states, and sets either the ES (Erase Suspend) bit in Status Register 4 in the case of a Suspend command, or the EE (Erase Error) bit in Status Register 5 in case of the *Terminate* command.

When the user issues the *Suspend* command the device requires a period of time equal to t_{SUS} before the BUSY flag goes low and the PE flag goes high. Similarly, when the user issues the *Terminate* command the device requires a period of time equal to t_{SWTERM} before the BUSY flag goes low and the EE flag goes high.

If the user issues the *Suspend* command, and then issues the *Terminate* command before the device has completed the internal suspend operation, the device honors the *Terminate* command and sets the EE flag. The ES flags is not set, and the BUSY flag is cleared. At this point the self-timed command that was terminated cannot be resumed, and the region of the memory that was being programmed/erased is left in an intermediate state.

This concept is shown in Figure 19.

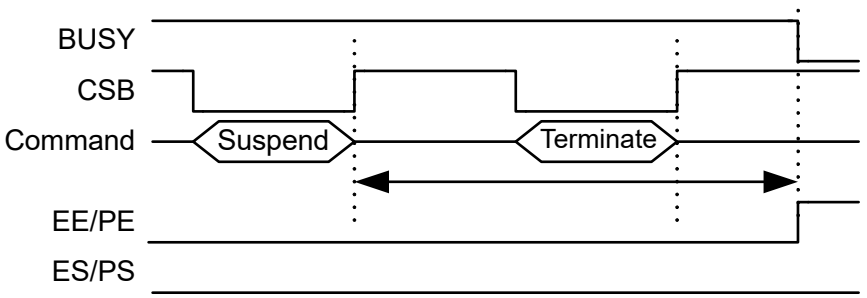

Figure 19. Issuing a Terminate Command Before the Suspend Command has Completed

Terminate After Suspend

If the time between the *Suspend* command and the *Terminate* command is large enough, then the device may finish the internal suspend operation before the *Terminate* command is received. In this case, the device clears

© 2022 Renesas Electronics

the BUSY bit in Status Register 1, and the ES/PS flag in Status Register 5 is set. Now when the device receives the Terminate command, it is ignored by the hardware. This concept is shown in Figure 20.

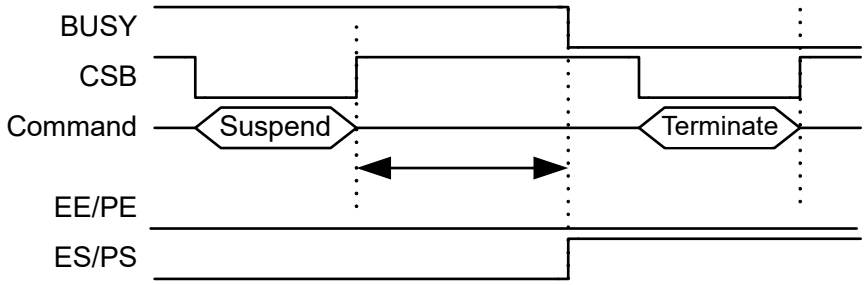

Figure 20. Allowing Enough Time for the Suspend Operation to Complete

If the user wishes to perform another program operation, they must check the status of both the PS and PE flags in Status Registers 4 and 5 respectively to determine the next action.

If the PS bit is cleared and the PE bit is set, the user can issue a new *Program* command. Note that previous *Program* command that was terminated leaves that region of memory in an intermediate state, and it is recommended to erase this region of memory before attempting to reprogram it.

If the ES/PS bit is set, then the user cannot issue another *Program*/*Erase* command. The user must first issue a *Resume* command to re-start the suspended program operation, then either allow it to run to completion or terminate it using the *Terminate* command. The user can now issue a new *Program*/*Erase* command.

5.10.4 Terminating a Non-Volatile Operation in Progress

The *Terminate* (F0h) command, the *Software Reset* command (66h + 99h), the hardware reset ($\overline{\text{RESET}}$) pin, and the JEDEC Reset are ways to terminate any on-going internal self-timed program/erase operation (and in some cases reset the device). However, abruptly terminating a *Status Register Write, Status Register Lock*, or *OTP Security Register Program* command is not desirable as this may leave these non-volatile registers in an indeterminate state.

Therefore when the device is busy executing the *Status Register Write*, the *Status Register Lock* or the *OTP Security Register Program* command, then the *Terminate* command is ignored. The software reset, hardware reset, and JEDEC reset actions are delayed until after the internal self-timed operations are completed; once the internal operation is completed, the device is reset. See Section 5.12 for more information on how to perform a JEDEC hardware reset.

© 2022 Renesas Electronics

5.11 OTP Security Register Lock

The AT25FF081A device supports four 128-byte OTP security registers. One register is programmed by Renesas Electronics at the factory and is always locked. The other three OTP registers can be programmed by the user and become locked whenever any bit in the most significant byte of that register is written. In response to this write operation, hardware writes bits 5:3 (SL3:SL1) of Status Register 2 to indicate that the corresponding register has been locked. Software can read this field to determine which registers have been locked.

Each byte of each register can be written using address bits 8:0 that are driven with the Program OTP Security register command (9Bh). See Table 30 in Section 7.22, Program Security Register (9Bh) for an exact encoding of these address bits.

This concept is shown in Figure 21. In this figure, A[8:7] are used to select between the four OTP Security registers, and A[6:0] are used to select one of the 128 bytes within that register. A value of 7'b1111111 on A[6:0] indicates an access to the MSB of that register as shown below.

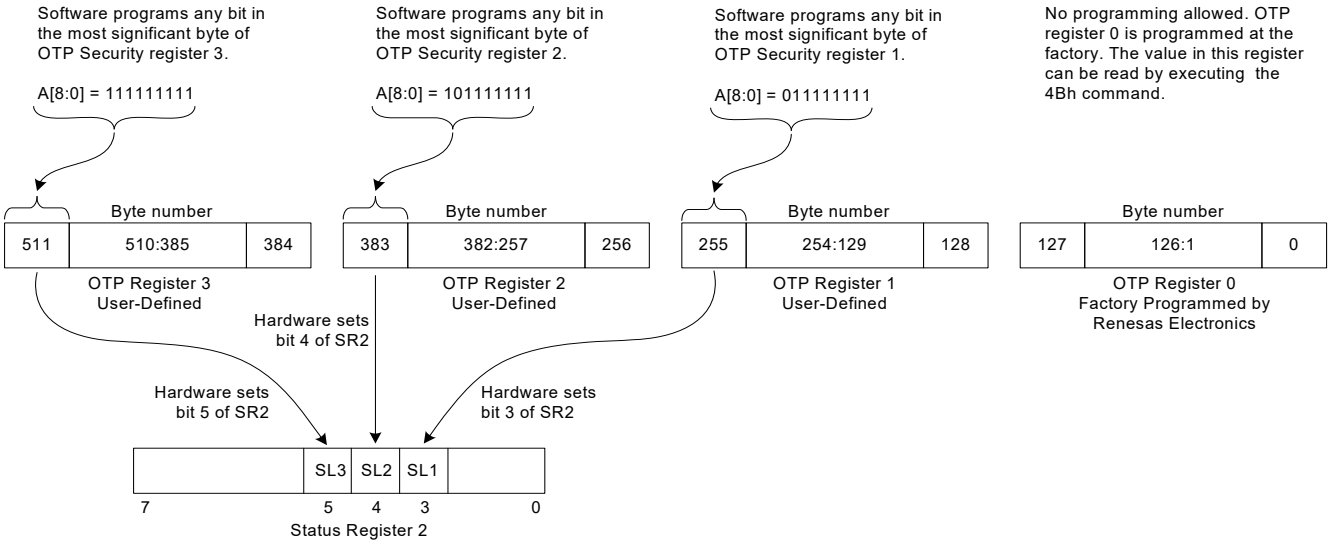

Figure 21. OTP Security Register Program and Lock

© 2022 Renesas Electronics

5.12 Standard JEDEC Hardware Reset

The JEDEC hardware reset sequence does not use the SCK pin. The SCK pin must be held low (mode 0) or high (mode 3) through the entire reset sequence. This prevents any confusion with a command, as no command bits are transferred.

A reset is commanded when the data on the SI pin is 0101 on four consecutive positive edges of the $\overline{CS}$ pin with no edge on the SCK pin throughout. This is a sequence where

1. $\overline{CS}$ is driven active low to select the device
2. Clock (SCK) remains stable in either a high or low state
3. SI is driven low by the bus master, simultaneously with $\overline{CS}$ going active low. No SPI bus slave drives SI during $\overline{CS}$ low before a transition of SCK
4. $\overline{CS}$ is driven inactive. The slave captures the state of SI on the rising edge of $\overline{CS}$

The above steps are repeated 4 times, each time alternating the state of SI.

After the fourth $\overline{CS}$ pulse, the slave triggers its internal reset. SI is low on the first CS, high on the second, low on the third, high on the fourth. This provides a value of 5h, unlike random noise. Any activity on SCK during this time halts the sequence and a Reset is not generated.

After a JEDEC hardware reset while the device is in Ultra-Deep Power-Down (UDPD) mode, the SRAM buffer resets to an undefined value. Hardware resets all volatile Status Registers, including the block protection bits, to their default values.

After a JEDEC hardware reset while the device is in any other mode than UDPD mode, the SRAM buffer keeps the values it had prior to Reset, with the following exception: If the reset sequence is initiated during an update of the SRAM buffer, the contents of the SRAM buffer may be corrupted. Hardware resets all volatile Status Registers, including the block protection bits, reset to their default values.

All non-volatile Status Registers keep the value they had prior to reset, with the following exception: If the reset sequence is initiated during a write to a non-volatile Status Register, the value of that register may be corrupted.

The device reverts to standard SPI mode after JEDEC hardware reset. Figure 22 below shows the timing for the JEDEC hardware reset operation.

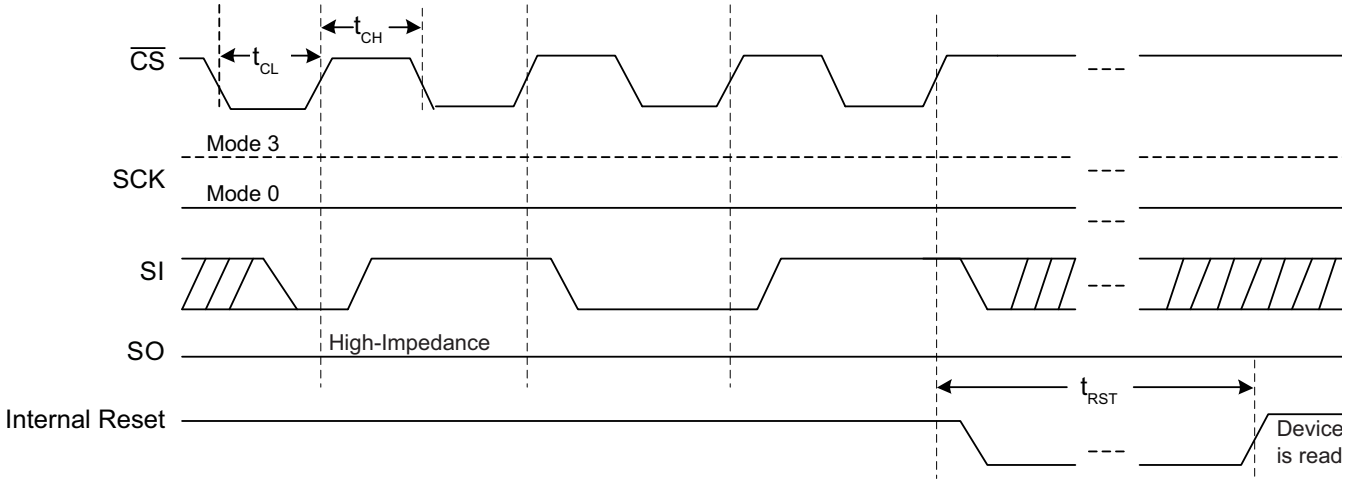

Figure 22. JEDEC Standard Hardware Reset

© 2022 Renesas Electronics

5.13 Chip Select Restrictions

The $\overline{CS}$ pin is used to start and end operations in the device. Once the $\overline{CS}$ pin is asserted and the operation begins, it can only be deasserted on a byte boundary. If the $\overline{CS}$ pin is deasserted on a non-byte boundary, the operation is ignored.

For example, when executing the ABh command to exit power-down mode, only the command is required. No address and data are required to perform this operation. Therefore, only eight clocks are required to transfer the command. If the $\overline{CS}$ pin is raised after the 8th clock (most significant bit of the command is transferred), hardware performs the operation. If the $\overline{CS}$ pin is raised after the 9th or 10th clock (not a byte boundary), the operation is ignored and no ABh command is executed.

Similarly, if the ABh command is used to fetch the device ID, once the $\overline{CS}$ pin is asserted, 40 clock cycles are required: 8 clocks for the command, 24 dummy clocks, and 8 clocks to shift out the device ID. If the $\overline{CS}$ pin is raised after the 40th clock, hardware transfers the ID information, exits power-down mode, and completes the operation. However, if the $\overline{CS}$ pin is raised on the 41st or 42nd clock (not a byte boundary), the ID information is still returned as that occurred in clocks 32 - 40, but the device does not exit power-down mode.

5.14 $\overline{HOLD}$ / $\overline{RESET}$ Function

The AT25FF081A device provides a configurable $\overline{HOLD}$/$\overline{RESET}$ pin. This pin can be configured to operate as either a $\overline{HOLD}$ pin, or as a device $\overline{RESET}$ pin, by programming bit 7 ($\overline{HOLD}$/$\overline{RESET}$) of Status Register 3. When this bit is cleared, the $\overline{HOLD}$/$\overline{RESET}$ pin functions as an active low $\overline{HOLD}$ pin. When this bit is set, the $\overline{HOLD}$/$\overline{RESET}$ pin functions as a active low device $\overline{RESET}$ pin.

The HOLD/RESET function is only valid in the SPI and dual output mode of operation. When bit 1 (QE) of Status Register 2 is set, indicating the device is in either Quad Output, quad I/O mode, or XiP mode. In this case the HOLD/RESET functions are not available and the pin functions as the I/O_3 data pin.

When configured as a $\overline{RESET}$ pin, no commands are accepted while the pin is low and the device is in reset.

Configuring the pin for the $\overline{HOLD}$ function allows an operation to be paused, then resumed when the $\overline{HOLD}$ pin is deasserted. Once the $\overline{HOLD}$ pin is asserted (with $\overline{CS}$ low), the HOLD function takes effect on the next falling edge of SCK. Conversely, once the $\overline{HOLD}$ pin is deasserted, the HOLD function is removed on the next falling edge of SCK. Note that the $\overline{CS}$ pin must be low for the entire time in which the HOLD operation is in progress.

The HOLD function can be used in situations where the clock and data signals of the AT25FF081A device are shared with other external agents, allowing the device to share the bus with other high priority events such as interrupts or other events that need immediate attention. Once the condition is resolved, the $\overline{HOLD}$ pin can be deasserted, allowing the operation to resume.

During the time the $\overline{HOLD}$ pin is asserted, the Serial Output (SO) pin is forced to the high impedance state. The state of the Serial Input (SI) and Serial Clock (SCK) pins are ignored. Note that the $\overline{CS}$ pin must be low for the entire time in which the HOLD operation is in progress.

© 2022 Renesas Electronics

6. Status Registers

The device contains five Status Registers (SR) described in the following subsections. The Status Registers can be read to determine the device's ready/busy status, as well as the status of many other functions such as hardware locking and software protection.

6.1 Register Structure and Updates

In the AT25FF081A device there are two sets of Status Registers. One set is implemented in hardware and is accessed as Status Registers 1 - 5. These are known as volatile registers as they lose their data during a device reset. Also, the device keeps a copy of the Status Registers in memory. These are known as non-volatile registers because they are stored in the Flash and are not affected by a device reset. On power up, the non-volatile contents of the memory are copied to the Status Registers. See Section 6.2.2 for more information on volatile and non-volatile register types.

The AT25FF081A provides two methods for updating the Status Registers. When the *Write to Status Register* command is preceded by the *Volatile Status Register Write Enable* (50h) command, only the flip-flops holding the Status Register bits are updated; the non-volatile memory dedicated to the Status Registers is not updated. When the *Write to Status Register* command is preceded with a *Write Enable* (06h) command, then both the flip-flops holding the Status Register bits and the non-volatile memory dedicated to the Status Registers are updated. This concept is shown in Figure 23.

The main difference between these two commands is the time required to execute them. Accesses to memory are much slower by default. So for the 50h command, the write is to the volatile Status Registers only which is very fast. For the 06h command, the write is not only to the Status Registers, but also to non-volatile memory which is much slower.

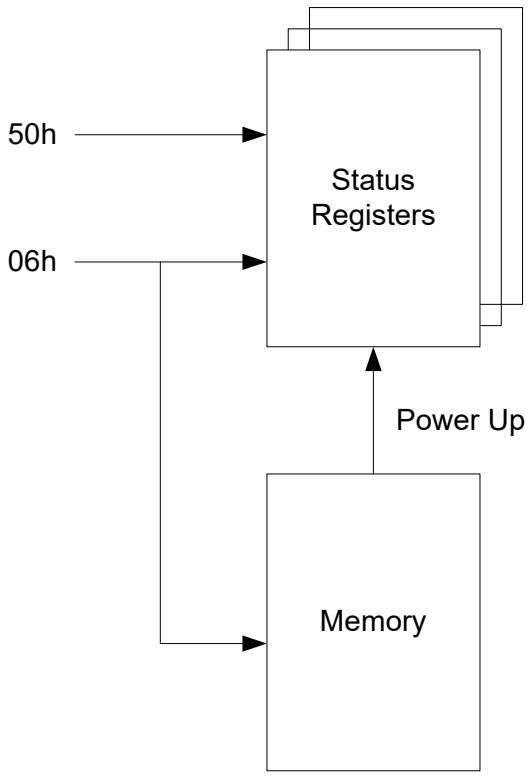

Figure 23. AT25FF081A Register Structure

© 2022 Renesas Electronics

6.2 Register Accesses

This section describes the various ways to access the AT25FF081A Status Registers. The AT25FF081A incorporates five Status Registers. Each of these registers can be written or read using both the direct and indirect addressing methods as described in Section 6.2.1. Also, the device supports both volatile and non-volatile registers as described in Section 6.2.2.

6.2.1 Direct and Indirect Addressing

The AT25FF081A device supports both direct and indirect addressing for accessing the Status Registers. The indirect addressing method can be used for all five Status Registers, and the direct addressing for the first three Status Registers. This means that Status Registers 4 - 5 can only be accessed using the indirect addressing method.

Historically, Renesas Electronics products have supported at most three Status Registers. These registers have been accessed using the direct addressing method, where every register has a specific command used to access it and perform read or write operations. An example of these commands is as follows:

- 05h: Read Status Register 1
- 35h: Read Status Register 2
- 15h: Read Status Register 3
- 01h: Write Status Register 1
- 31h: Write Status Register 2
- 11h: Write Status Register 3

The above commands have been retained to provide backward compatibility with existing software. In addition to the direct method, the AT25FF081A device also provides an indirect method. In the indirect method, a single command (65h) is used to execute a read operation on all of the Status Registers. Another command (71h) is used to execute a write operation on all of the Status Registers. Once the command is provided, an 8-bit address field is used to determine which register to access. The encoding of the address field is shown in Table 12.

Table 12. Indirect Addressing of Status Registers

Command	Address	Action
65h	01h	Read Status Register 1
	02h	Read Status Register 2
	03h	Read Status Register 3
	04h	Read Status Register 4
	05h	Read Status Register 5
71h	01h	Write Status Register 1
	02h	Write Status Register 2
	03h	Write Status Register 3
	04h	Write Status Register 4
	05h	Write Status Register 5

Note that by using the indirect address method, an address width of 8 bits indicates that up to 256 registers can be accessed, allowing for future expansion without requiring additional commands or associated hardware complexity.

6.2.2 Volatile and Non-Volatile Register Accesses

As shown in Figure 23, the AT25FF081A device supports both volatile and non-volatile register accesses. Volatile register accesses are to the Status Registers implemented in hardware. Non-volatile register accesses are to the Status Registers stored in memory. During power-up, the contents of the registers in memory are copied to the hardware Status Registers.

The preceding 50h or 06h commands determines if the *Write Status Register* command is to the volatile or non-volatile register set.

6.3 Status Register 1

Table 13 shows the bit assignments for Status Register 1.

© 2022 Renesas Electronics

Table 13. Status Register 1 Format

Bit #	Acronym	Name	Type	Default	Description
7	SRP0	Status Register Protect 0	R/W	0	The SRP0 bit works in conjunction with the SRP1 bit in Status Register 1 and the $\overline{WP}$ pin to control write protection. Types of protection include software protection, hardware protection, one-time programmable (OTP) protection, and power supply lock-down protection. See Table 15 for an encoding of these bits.
6	BPSIZE	Block Protect Size	R/W	0	The BPSIZE bit controls the size of the blocks protected by the Block Protect Bits (BP2, BP1, BP0 in bits 4:2 of this register). This bit is encoded as follows: 0: 64 kB block size 1: 4 kB block size The blocks can also be protected from the bottom up or from the top down as described in the TB bit of this register.
5	TB	Top/Bottom	R/W	0	The TB bit controls the direction of the blocks to be protected by the Block Protect Bits (BP2, BP1, BP0 in bits 4:2 of this register). This bit is encoded as follows: 0: Protect from bottom up; 1: Protect from top down The size of the protected blocks can also be selected as described in the BPSIZE bit of this register.
4:2	BP2:0	Block Protect	R/W	000	The 3-bit Block Protect field provides write protection control and status. These bits are set using the Write Status Register 1 (01h) command. This field can be programmed to protect all of the memory array, none of the memory array, or a portion of the memory array. When that portion of the memory is selected, it is protected from the Program and Erase commands as described in the Memory Protection table. The default is 3'b000 for this field, indicating that none of the memory array is protected.
1	WEL	Write Enable Latch Status	R	0	The WEL bit indicates the current status of the internal Write Enable Latch. When the WEL bit is in the logic "0" state, the device does not accept any program, erase, memory protection, or Write Status Register commands. The WEL bit defaults to the logic "0" state after a device power-up or reset. This bit is encoded as follows: 0: Device is not write enabled (default); 1: Device is write enabled. If the WEL bit is in the logic "1" state, it is not reset to a logic "0" if an operation aborts due to an incomplete or unrecognized command being clocked into the device before the $\overline{CS}$ pin is deasserted. In order for the WEL bit to be reset when an operation aborts prematurely, the entire command for a program, erase, memory protection, or Write Status Register command must have been clocked into the device. When the Write Enable (06h) command is executed, the WEL bit is set. Conversely, when the Volatile Status Register Write Enable (50h) command is executed, the WEL bit is not set.
0	$\overline{RDY}$/BSY	Ready/Busy Status	R	0	The $\overline{RDY}$/BSY bit is used to determine whether or not an internal operation, such as a program or erase, is in progress. To poll the $\overline{RDY}$/BSY bit to detect the completion of a program or erase cycle, new Status Register data must be continually clocked out of the device until the state of the $\overline{RDY}$/BSY bit changes from a logic "1" to a logic "0". This bit is encoded as follows: 0: Device is ready; 1: Device is busy with an internal operation.

© 2022 Renesas Electronics

6.4 Status Register 2

Table 14 shows the bit assignments for Status Register 2.

Table 14. Status Register 2 Format

Bit #	Acronym	Name	Type	Default	Description
7	SUSP	Suspend Status	R	0	The SUSP bit is set by hardware and indicates that the program or erase operation has been suspended. This bit is set after software executes an Erase/Program Suspend (75h) command. Hardware clears this bit when it detects that any of the following events have occurred: ▪ Erase/Program Resume (7Ah) command ▪ Hardware Reset, JEDEC Hardware Reset ▪ 66h / 99h Reset command
6	CMPRT	Complement Protect	R/W	0	The CMPRT is used in conjunction with BPSIZE, TB, and BP2:BP0 bits to provide additional memory array protection. This bit is encoded as follows: 0: Current protection mechanism is unchanged 1: Current protection mechanism is reversed When this bit is set, unprotected areas of memory become protected, and protected areas of memory become unprotected. For example, when CMPRT = 0, a top 64 kB block can be protected while the rest of the array is not; when CMP = 1, the same 64 kB block becomes unprotected while the rest of the array becomes read-only.
5:3	SL3:SL1	Security Lock 3:1	R	000	The 3-bit SL3:SL1 field provides a One-Time-Program (OTP) lock status of Security registers 1 - 3. This field is used by software to determine which of these Security registers have been locked. Note that Security register 0 is always locked as the value is programmed by Renesas Electronics at the factory. The default state of SL[3:1] is 0, indicating that all registers are unlocked. Each bit corresponds to a Status Register as follows: SL3 (bit 5): Security register 3 SL2 (bit 4): Security register 2 SL1 (bit 3): Security register 1 Each bit in this field is set by hardware when the most significant byte of the corresponding Security register (the 128th byte) is programmed. For example, when the most significant byte of Security register 1 is set, bit 3 (SL1) of this field is set. Conversely, when the most significant byte of Security register 3 is set, bit 5 (SL3) of this field is set. Each time a bit is set, it indicates that the corresponding 128-Byte Security register has become read-only permanently.
2	R	Reserved	R	0	Reserved

© 2022 Renesas Electronics

Table 14. Status Register 2 Format (Cont.)

Bit #	Acronym	Name	Type	Default	Description
1	QE	Quad Enable	R/W	0	The QE bit enables Quad SPI and XiP operation.This bit is encoded as follows: 0: QE mode is disabled 1: QE mode is enabled When the QE bit is cleared (logic 0), the $\overline{WP}$ and $\overline{HOLD}$/$\overline{RESET}$ pins are enabled and perform their respective functions. When the QE bit is set (logic 1), the $\overline{WP}$ and $\overline{HOLD}$/$\overline{RESET}$ pins function as the IO_2 and IO_3 pins respectively, and the $\overline{WP}$ and $\overline{HOLD}$/$\overline{RESET}$ pins functions are disabled. This bit only pertains to the following commands: 6Bh: Quad Output Read EBh: XiP Mode Read E7h: XiP Mode Read with Double-word Aligned Address 32h: Quad Output Page Program 77h: Set Burst with Wrap 94h: Quad I/O Read Manufacturer/Device ID
0	SRP1	Status Register Protect 1	R/W	0	The SRP1 bit works in conjunction with the SRP0 bit in Status Register 0 and the $\overline{WP}$ pin to control write protection. Types of protection include software protection, hardware protection, one-time programmable (OTP) protection, and reset lock-down protection. See Table 15 for an encoding of these bits.

© 2022 Renesas Electronics

Table 15 shows the operation of the SRP[1:0] volatile Status Register bits during normal operation.

Table 15. Status Register Protection During Normal Operation

SRP1	SRP0	SRLOCK	WP	Type of Protection	Description
0	0	x	x	Software Protected (protection is controlled by the CMPRT, BPSIZE, TB, BP[2:0], or WPS bits)	When both the SRP0 and SRP1 bits are 0, the Status Registers can be written by executing a Write Status Register command (01h, 31h, 11h, 71h) and setting the WEL bit of this register. Note that the $\overline{WP}$ pin has no meaning during this type of operation.
0	1	x	0	Hardware Protected (protection is controlled by the $\overline{WP}$ pin)	When the SRP[1:0] bits are 0, 1 respectively, and the $\overline{WP}$ pin is low, the registers are hardware protected and cannot be written to.
0	1	x	1	Hardware Unprotected (protection is controlled by the CMPRT, BPSIZE, TB, BP[2:0], or WPS bits)	When the SRP[1:0] bits are 0, 1 respectively, and the $\overline{WP}$ pin is high, the registers are not hardware protected and can be written to by executing a Write Status Register command (01h, 31h, 11h, 71h) and setting the WEL bit of this register.
1	0	x	x	Reset Lockdown	When the SRP[1:0] bits are 1, 0 respectively, the Status Registers are write protected and cannot be written until the device is reset (caused by a power-cycle, hardware reset, or software reset). After reset, hardware changes the state of the SRP[1:0] bits as shown in Table 16.
1	1	0	x	Reset Lockdown	When the SRP[1:0] bits are 1,1 respectively, and the SRLOCK bit is 0, the Status Registers are write protected and cannot be written until the device is reset (caused by a power-cycle, hardware reset or software reset). After reset, hardware changes the state of SRP[1:0] bits as shown in Table 16.
1	1	1	x	OTP	When the SRP[1:0] bits are 1,1 respectively, and the SRLOCK bit is 1, the Status Registers are permanently write protected.

Table 16 shows the behavior of the SRP1 and SPR0 bits after a reset condition.

Table 16. Status Register Protection During Reset

Non-Volatile Memory Bits			Type of Protection	Description	Volatile Register Bits	
SRP1	SRP0	SRLOCK			SRP1	SRP0
0	0	x	Software Protected	The reset operation maintains the volatile SRP1 and SRP0 at 0,0.	0	0
0	1	x	Hardware Protected	The reset operation maintains the volatile SRP1 and SRP0 at 0,1.	0	1
1	0	x	Reset Lockdown	The reset operation changes the volatile SRP1 and SRP0 bits to 0,0.	0	0
1	1	0	Reset Lockdown	The reset operation changes the volatile SRP1 and SRP0 bits to 0,1.	0	1
1	1	1	One-Time Program (OTP)	The reset operation maintains the volatile SRP1 and SRP0 at 1,1. This makes the Status Registers permanently write protected.	1	1

© 2022 Renesas Electronics

6.5 Status Register 3

Table 17 shows the bit assignments for Status Register 3.

Table 17. Status Register 3 Format

Bit #	Acronym	Name	Type	Default	Description
7	HOLD/ RESET	HOLD or RESET Function	R/W	0	Renesas Electronics provides a variety of packages for the AT25FF081A as shown in Section 2. Each of these packages provides a dedicated HOLD/RESET pin that can be configured as a RESET pin, or as a HOLD pin, depending on the programming of this bit. This bit is encoded as follows: 0: HOLD function is enabled 1: RESET function is enabled Note that this pin can only be configured as HOLD or RESET when the QE bit (see bit 1 of Status Register 2) is cleared (logic 0). If the QE bit is set, the pin functions as a dedicated data pin and the HOLD/RESET functionality is disabled.
6:5	DRV1:0	Drive Level	R/W	01[1]	The DRV1 and DRV0 bits are used to determine the output driver strength during read operations. The driver strength is automatically adjusted with VCC level. The driver strength is encoded as following: 00: Reserved 01: 100% (increase 1.66X at low VCC) 10: 66% (increase 2X at low VCC) 11: 33% (increase 3X at low VCC)
4:3	R	Reserved	R	0	Reserved
2	WPS	Write Protection Select	R/W	0	The WPS bit selects the Write Protect scheme. This bit is encoded as follows: 0: The AT25FF081A uses a combination of CMPRT, BPSIZE, TB, and BP[2:0] bits in Status Register 1 to protect a specific area of the memory array. 1: The AT25FF081A uses the individual block locks to protect any individual block. The default value for all individual block lock bits is 1 upon device power on or after reset. When this bit is set, software uses the Block Lock (36h) and Block Unlock (39h) commands to lock and unlock blocks of memory. For more information on this functionality, see Section 5.8, Memory Protection.
1:0	R	Reserved	R	0	Reserved

1. Default driver strength was used for device test and characterization. In order to achieve optimal performance in user system, it is recommended to adjust driver strength setting to match user system load under application specific environmental conditions.

© 2022 Renesas Electronics

6.6 Status Register 4

Table 18 shows the bit assignments for Status Register 4.

Table 18. Status Register 4 Format

Bit #	Acronym	Name	Type	Default	Description
7	PDM	Power-Down Mode	R/W	0	This bit is used in conjunction with the Deep Power-Down command (B9h) to place the device into either Deep Power-Down mode, or Ultra Deep Power-Down mode. This bit is encoded as follows: 0: Execution of the B9h command invokes Ultra Deep Power-Down mode. This is the same as executing the UDPD command 79h. In this mode the SRAM buffer contents are not preserved. 1: Execution of the B9h command invokes Deep Power-Down mode. In this mode the SRAM buffer contents are preserved. In both modes, the ABh command is required to exit the corresponding Power-Down mode. Simply toggling the $\overline{CS}$ pin does not result in exiting from Power-Down mode. For more information see Section 5.9, Power-Down Considerations.
6	SPM	Sequential Program Mode Status	R	0	The SPM bit indicates whether the device is in the Byte/Page Program mode or the Sequential Program Mode. The default state after power-up or device reset is the Byte/Page Program mode. This bit is encoded as follows: 0: Byte/Page Programming Mode (default) 1: Sequential Programming Mode entered If this bit is 1, the address is only required for the first transfer of the sequential operation. Therefore, on the first transfer, command, address, and data are required. If there are subsequent operations, the address is not required. Software need only supply the command and data (on a write).
5	PE	Program Error	R	0	This bit is set by hardware whenever an error occurs during a program operation.
4	EE	Erase Error	R	0	This bit is set by hardware whenever an error occurs during an erase operation.
3	XiP	XiP Mode Select	R/W	0	This bit determines whether a command is required each time a read operation is executed using the E7h or EBh (Quad Read) commands. This bit is encoded as follows: 0: XiP mode (continuous read mode) is disabled 1: XiP mode (continuous read mode) is enabled If this bit is set and either the E7h or EBh commands are executed, the command is only required for the first access (1-4-4). In this case, the command is transferred on the SI pin, and the address and data are transferred on the SI (I/O_0), SO (I/O_1), $\overline{WP}$ (I/O_2), and $\overline{HOLD}$ (I/O_3) pins. Subsequent accesses require only address and data (0-4-4). Note that if either this bit or the QE bit (see bit 1 of Status Register 2) is 0, the device can never be placed into 0-4-4 mode, and a command is required for each access.
2:0	BWS[2:0]	Burst Wrap Settings	R	001	This 3-bit field maps to the W6:W4 bits of the Set Burst Wrap command (77h) to determine the burst wrap status and the wrap length. See Section 7.13 for more information on the Set Burst Wrap command and an encoding of this field.

© 2022 Renesas Electronics

6.7 Status Register 5

Table 19 shows the bit assignments for Status Register 5.

Table 19. Status Register 5 Format

Bit #	Acronym	Name	Type	Default	Description
7	SRLOCK	Status Register Lock	R	0	Hardware sets this bit when the user executes the Status Register Lock (6Fh) command, immediately followed by two verification bytes, 4Dh and 67h. Once this action occurs, the Status Registers can be permanently locked.
6:4	DC[2:0]	Dummy Clocks	R/W	000	This field indicates the number of dummy clocks to be inserted between the address and data transactions for the EBh and E7h commands. Note that the dummy clocks include the 2 clocks required to clock in the M[7:0] bits. 000: 2 clocks 001: 4 clocks 010: 6 clocks 011: 8 clocks 100: 10 clocks 101 - 111: Reserved
3	ES	Erase Suspend	R	0	This bit is set by hardware whenever an erase operation is suspended.
2	PS	Program Suspend	R	0	This bit is set by hardware whenever a program operation is suspended.
1	TERE	Terminate Enable	R/W	0	The TERE bit is used to enable or disable the Terminate command. This bit is encoded as follows: 0: Terminate command is disabled 1: Terminate command is enabled When the TERE bit is cleared (the default state after power-up), the Terminate command is disabled and any attempts to reset the device using the Terminate command are ignored. When the TERE bit is set, the Terminate command is enabled. The TERE bit retains its state as long as power is applied to the device. Once set, the TERE bit remains in that state until it is modified using the Write Status Register Byte 5 command or until the device has been power cycled.
0	DWA	Doubleword Aligned	R/W	0	Setting the DWA bit indicates that the devices adheres to double-word aligned addressing. This bit is only used when the EBh (XiP DWA Read) command is executed and is encoded as follows: 0: Double-word addressing is disabled 1: Double-word addressing is enabled When this bit is set, the lower 2 bits of address are ignored and assumed to be 00.

© 2022 Renesas Electronics

7. Commands and Addressing

A valid command or operation must always be started by first asserting the $\overline{CS}$ pin. After the $\overline{CS}$ pin has been asserted, the host controller must then clock out a valid 8-bit command on the SPI bus. Following the command, information such as address and data bytes would then be clocked out by the host controller. All command, address, and data bytes are transferred with the most-significant bit (MSB) first. An operation is ended by deasserting the $\overline{CS}$ pin.

Commands not supported by the AT25FF081A are ignored by the device and no operation is started. The device continues to ignore any data presented on the SI pin until the start of the next operation ($\overline{CS}$ pin being deasserted and then reasserted). Also, if the $\overline{CS}$ pin is deasserted before the complete command and address information are sent to the device, then no operation is performed and the device simply returns to the idle state and waits for the next operation.

Depending on the command, up to three bytes of information may be required, representing address bits A23 - A0. Since the upper address limit of the AT25FF081A memory array is 0FFFFFh, address bits A23 - A20 are always ignored by the device.

Table 20. Command Listing

Command Name	Sct in Doc.	Hex Cmd	Transfer Type [1]		Command		Address		Dummy		Data	
			Mode	Format	Bytes	Clocks	Bytes	Clocks	Bytes	Clocks	Bytes [2]	Clocks
Read Commands												
Read Array	7.1	03h	SPI	1-1-1	1	8	3	24	0	0	Var.	Var. x 8
Fast Read Array	7.1	0Bh	SPI	1-1-1	1	8	3	24	1	8	Var.	Var. x 8
Dual Output Read Array	7.2	3Bh	Dual Output	1-1-2	1	8	3	24	1	8	Var.	Var. x 4
Quad Output Read Array	7.3	6Bh	Quad Output	1-1-4	1	8	3	24	1	8	Var.	Var, x 2
XiP Mode Read Array (initial transfer)	7.4	EBh	XiP	1-4-4	1	8	3	6	Var.	Var. x 2	Var.	Var. x 2
XiP Mode Read Array (subsequent transfers)	7.4	---	XiP	0-4-4	0	0	3	6	Var.	Var. x 2	Var.	Var. x 2
XiP Mode Read Array - DWA addr (initial transfer)	7.4	E7h	XiP	1-4-4	1	8	3	6	Var.	Var. x 2	Var.	Var. x 2
XiP Mode Read Array - DWA addr, subsequent transfers	7.4	---	XiP	0-4-4	0	0	3	6	Var.	Var. x 2	Var.	Var. x 2
Program/Erase Commands												
Block Erase (4 Kbytes)	7.5	20h	SPI	1-1-0	1	8	3	24	0	0	0	0
Block Erase (32 Kbytes)	7.5	52h	SPI	1-1-0	1	8	3	24	0	0	0	0
Block Erase (64 Kbytes)	7.5	D8h	SPI	1-1-0	1	8	3	24	0	0	0	0
Chip Erase	7.6	60h	SPI	1-0-0	1	8	0	0	0	0	0	0
	7.6	C7h	SPI	1-0-0	1	8	0	0	0	0	0	0
Byte/Page Program (1 - 256 bytes)	7.7	02h	SPI	1-1-1	1	8	3	24	0	0	Var. (1 - 256)	Var. x 8
Sequential Program Mode [3] (first command)	7.8	ADh/ AFh	SPI	1-1-1	1	8	3	24	0	0	1	8
Sequential Program Mode (subsequent commands)	7.8	ADh/ AFh	SPI	1-0-1	1	8	0	0	0	0	1	8
Dual Output Byte/Page Program	7.9	A2h	Dual Output	1-1-2	1	8	3	24	0	0	Var. (1 - 256)	Var. x 4

© 2022 Renesas Electronics

Table 20. Command Listing (Cont.)

Command Name	Sct in Doc.	Hex Cmd	Transfer Type [1]		Command		Address		Dummy		Data	
			Mode	Format	Bytes	Clocks	Bytes	Clocks	Bytes	Clocks	Bytes [2]	Clocks
Quad Output Byte/Page Program	7.10	32h	Quad Output	1-1-4	1	8	3	24	0	0	Var. (1 - 256)	Var. x 2
Erase/Program Suspend	7.11	75h/ B0h	SPI	1-0-0	1	8	0	0	0	0	0	0
Erase/Program Resume	7.12	7Ah/ D0h	SPI	1-0-0	1	8	0	0	0	0	0	0
Set Burst with Wrap	7.13	77h	Quad I/O	1-4-4	1	8	3 [4]	6	0	0	1 [5]	2
Protection Commands												
Write Enable	7.14	06h	SPI	1-0-0	1	8	0	0	0	0	0	0
Write Disable	7.15	04h	SPI	1-0-0	1	8	0	0	0	0	0	0
Volatile Status Register Write Enable	7.16	50h	SPI	1-0-0	1	8	0	0	0	0	0	0
Individual Block Lock	7.17	36h	SPI	1-1-0	1	8	3	24	0	0	0	0
Individual Block Unlock	7.18	39h	SPI	1-1-0	1	8	3	24	0	0	0	0
Read Block Lock	7.19	3Ch/ 3Dh	SPI	1-1-1	1	8	3	24	0	0	1 [6]	8
Global Block Lock	7.20	7Eh	SPI	1-0-0	1	8	0	0	0	0	0	0
Global Block Unlock	7.21	98h	SPI	1-0-0	1	8	0	0	0	0	0	0
Security Register Commands												
Program OTP Security Register	7.22	9Bh	SPI	1-1-1	1	8	3 [7]	24	0	0	Var. (1 - 128)	Var. x 8
Read OTP Security Register	7.23	4Bh	SPI	1-1-1	1	8	3 [7]	24	1	8	Var. (1 - 128)	Var. x 8
Status Register Commands												
Read Status Register 1	7.24	05h	SPI	1-0-1	1	8	0	0	0	0	1	8
Read Status Register 2	7.24	35h	SPI	1-0-1	1	8	0	0	0	0	1	8
Read Status Register 3	7.24	15h	SPI	1-0-1	1	8	0	0	0	0	1	8
Read Status Register 4	7.25	65h	SPI	1-1-1	1	8	1	8	1	8	1	8
Read Status Register 5	7.25	65h	SPI	1-1-1	1	8	1	8	1	8	1	8
Write Status Register 1	7.26	01h	SPI	1-0-1	1	8	0	0	0	0	1 [8]	8
Write Status Register 2	7.26	31h	SPI	1-0-1	1	8	0	0	0	0	1	8
Write Status Register 3	7.26	11h	SPI	1-0-1	1	8	0	0	0	0	1	8
Write Status Register 4	7.27	71h	SPI	1-1-1	1	8	1	8	0	0	1	8
Write Status Register 5	7.27	71h	SPI	1-1-1	1	8	1	8	0	0	1	8
Read Status Registers	7.25	65h	SPI	1-1-1	1	8	1 [9]	8	1	8	Var. [10] (1 - 5)	Var. x 8
Write Status Registers	7.27	71h	SPI	1-1-1	1	8	1 [9]	8	0	0	1	8
Status Register Lock	7.28	6Fh	SPI	1-0-1	1	8	0	0	0	0	2	16
Power-Down Commands												
Deep Power-Down [11]	7.29	B9h	SPI	1-0-0	1	8	0	0	0	0	0	0
Ultra Deep Power-Down [12]	7.31	79h/B 9h	SPI	1-0-0	1	8	0	0	0	0	0	0
Resume from Deep Power-Down	7.30	ABh	SPI	1-0-0	1	8	0	0	0	0	0	0

© 2022 Renesas Electronics

Table 20. Command Listing (Cont.)

Command Name	Sct in Doc.	Hex Cmd	Transfer Type [1]		Command		Address		Dummy		Data	
			Mode	Format	Bytes	Clocks	Bytes	Clocks	Bytes	Clocks	Bytes [2]	Clocks
Resume from Deep Power-Down with Device ID	7.30	ABh	SPI	1-1-1	1	8	3	24	0	0	1	8
Resume from Ultra Deep Power-Down	7.30	ABh	SPI	1-0-0	1	8	0	0	0	0	0	0
Reset Commands												
Enable Reset	7.32	66h [13]	SPI	1-0-0	1	8	0	0	0	0	0	0
Reset Device	7.32	99h [13]	SPI	1-0-0	1	8	0	0	0	0	0	0
Terminate	7.33	F0h	SPI	1-0-1	1	8	0	0	0	0	1	8
Manufacturer/Device Commands												
Manufacturer/Device ID	7.34	90h	SPI	1-1-1	1	8	3	24	0	0	2 [14]	16
Manufacturer/Device ID	7.35	94h	Quad I/O	1-4-4	1	8	3	6	1	2	2 [14]	4
JEDEC ID	7.36	9Fh	SPI	1-0-1	1	8	0	0	0	0	5 [15]	40
Miscellaneous Commands												
Read SFDP	7.37	5Ah	SPI	1-1-1	1	8	3	24	1	8	Var. [16]	Var. x 8

1. Indicates command, address, and data, and the number of pins each type is driven on. For example, 1-1-2 indicates that the command is driven on one pin (SI), address is driven on one pin (SI), and data is driven on two pins (SI and SO).
2. Var = Variable.
3. For the initial transfer of the ADh/AFh command, the command, address, and data are required. For all subsequent command, only the command and data are necessary. The address field is not required and increments automatically within the device.
4. For the 77h command, 24 bits are transferred in the address field, but these bits are don't care and are not used in the operation.
5. For the 77h command, the data byte consists of wrap bits W[7:0]. Bits 6:4 of this value are the only valid bits of the byte and are used to set the wrap mode.
6. For the 3Ch/3Dh command, the data byte returned provides the lock status for the 4 kB block relative to the address provided.
7. For the 9Bh and 4Bh commands, only the lower 9 bits of address (A[8:0]) are valid. Address bits 23:9 are don't care.
8. For compatibility with legacy devices, command 01h can also be used with 2 bytes of data. In such case, the second byte is written to Status Register 2.
9. The 65h and 71h commands require only one byte of address.
10. For the 65h command, if the initial value in the address field is 01h, pointing to SR1, all of the Status Registers can be read in one operation as long as the $\overline{CS}$ pin is held low. Once the data for SR1 is fetched, hardware increments the address automatically and fetch the contents of SR2, etc., until all five registers have been read.
11. Deep Power-Down mode can be entered by executing the B9h command with bit 7 (PDM) of Status Register 4 set.
12. Ultra Deep Power-Down mode can be entered by either executing the 79h command, or by executing the B9h command with bit 7 (PDM) of Status Register 4 cleared.
13. The 66h and 99h commands are used together and form back-to-back 1-0-0 sequences on the bus.
14. For the 90h and 94h commands, two data bytes are output. The first byte is the manufacturer ID, and the second byte is the device ID.
15. For the 9Fh command, five bytes are output. First byte is the manufacturer ID, second byte is Device ID 1, third byte is Device ID 2, fourth byte is the extended string length, and the fifth byte is the extended string value.
16. For the 5Ah command, hardware outputs the data associated with the address provided, then increments the address automatically and continues to output successive locations as long as the $\overline{CS}$ pin remains asserted. To read the entire SFDP value, software must program the initial address as 000000h to access the first address, the leave $\overline{CS}$ asserted until the entire SFDP is read out.

© 2022 Renesas Electronics

7.1 Read Array (03h, 0Bh)

The *Read Array* command can be used to sequentially read a continuous stream of data from the device by simply providing the clock signal once the initial starting address is specified. The device incorporates an internal address counter that automatically increments every time one byte of data is output by the device.

Two commands (0Bh and 03h) can be used to read the memory array. The use of each command depends on the maximum clock frequency that is used to read data from the device. The 0Bh command can be used at any clock frequency up to the maximum specified by f_{SCK}, and the 03h command can be used for lower frequency read operations up to the maximum specified by f_{RDLF}.

7.1.1 Transfer Format

The 03h/0Bh command follows the 1-1-1 transfer format described in Section 5.2, where the command and address are transferred on the SI pin, and data is transferred on the SO pin. See Figure 7 for timing diagram of a 1-1-1 transfer showing the toggling of external bus signals for a read operation without dummy bytes. Figure 8 shows a read operation with dummy bytes.

7.1.2 Transfer Sequence

To perform the *Read Array* command, the $\overline{CS}$ pin is asserted and the information transferred as follows:

- Assert the $\overline{CS}$ pin.
- The appropriate command (0Bh or 03h) is clocked into the device. Eight clocks are required to transfer the command. The most significant bit of the command is transferred first.
- Three address bytes are clocked in to specify the starting address location of the first byte to read within the memory array. A total of 24 clocks are required to transfer the address. The most significant bit of the address (A[23]) is transferred first.
- Following the three address bytes, an additional dummy byte must be clocked into the device if the 0Bh command is used.
- Data is output on the SO pin. Each byte transfer requires eight clock cycles. The number of bytes transferred is determined by software. The transfer can be anywhere from a single byte to the entire memory array. The most significant bit of each data byte is transferred first.
- Deasserting the $\overline{CS}$ pin terminates the read operation and puts the SO pin into high-impedance state. The $\overline{CS}$ pin can be deasserted at any time and does not require a full byte of data be read.

See Table 20 for more information on the transfer sequence for this command.

When the last byte (0FFFFFh) of the memory array has been read, the device loops back and continues reading at the beginning of the array (000000h). No delays are incurred when wrapping around from the end of the array to the beginning of the array.

© 2022 Renesas Electronics

7.2 Dual Output Read Array (3Bh)

The Dual Output Read Array command is similar to the standard Read Array (03h/0Bh) command and can be used to sequentially read a continuous stream of data from the device by simply providing the clock signal once the initial starting address has been specified. Unlike the standard Read Array command, however, the Dual Output Read Array command allows two bits of data to be clocked out of the device on every clock cycle, rather than just one.

7.2.1 Transfer Format

The 3Bh command follows the 1-1-2 transfer format described in Section 5.3, where the command and address are transferred on the SI pin, and output data is transferred on the SI and SO pin. To facilitate this transfer, hardware switches the SI pin to an output as soon as the command has been decoded and the address transferred. See Figure 10 for a timing diagram of this command.

7.2.2 Transfer Sequence

To perform the Dual Output Read Array operation, the $\overline{CS}$ pin is asserted and the information transferred as follows:

- The 3Bh command is clocked into the device. Eight clocks are required to transfer the command. The most significant bit of the command is transferred first.
- Three address bytes are clocked in to specify the starting address location of the first byte to read within the memory array. A total of 24 clocks are required to transfer the address. The most significant bit of the address (A[23]) is transferred first.
- Following the three address bytes, an additional dummy byte must be clocked into the device. This requires eight clock cycles to complete.
- Data is output on the SI and SO pins. As a result, each byte transfer requires four clock cycles, half that of the 03h/0Bh commands. The data is always output with the most significant bit of the byte transferred first. The number of bytes transferred is determined by software. The transfer can be anywhere from a single byte to the entire memory array. The data is driven onto the bus as follows:1st data clock: bit 7 is output on the SO pin
  - 1st data clock: bit 6 is output on the SI pin
  - 2nd data clock: bit 5 is output on the SO pin
  - 2nd data clock: bit 4 is output on the SI pin
  - 3rd data clock: bit 3 is output on the SO pin
  - 3rd data clock: bit 2 is output on the SI pin
  - 4th data clock: bit 1 is output on the SO pin
  - 4th data clock: bit 0 is output on the SI pin
  - Subsequent bytes are output with each additional 4 clocks. The sequence above continues with each byte of data being output after every four clock cycles.
- Deasserting the $\overline{CS}$ pin terminates the read operation and puts the SO and SI pins into a high-impedance state. The $\overline{CS}$ pin can be deasserted at any time and does not require that a full byte of data be read.

When the last byte (0FFFFFh) of the memory array has been read, the device continues reading from the beginning of the array (000000h). No delays are incurred when wrapping around from the end of the array to the beginning of the array.

© 2022 Renesas Electronics

7.3 Quad Output Read Array (6Bh)

The Quad Output Read Array command is similar to the Dual Output Read Array command, except that the Quad Output Read Array command allows four bits of data to be clocked out of the device on every clock cycle, rather than just one or two. Note that the Quad Enable bit (QE) in Status Register 2 (SR2) must be set to enable this command. The Quad Output Read Array command can be used at any clock frequency, up to the maximum specified by f_{SCK}.

7.3.1 Transfer Format

The 6Bh command follows the 1-1-4 transfer format described in Section 5.4, where the command and address are transferred on the SI pin, and data is transferred on the $\overline{HOLD}$, $\overline{WP}$, SO, and SI pins. See Figure 14 for a timing diagram of this transaction.

7.3.2 Transfer Sequence

To perform the Quad Output Read Array operation, the $\overline{CS}$ pin is asserted and the information transferred as follows:

- The 6Bh command is clocked into the device. Eight clocks are required to transfer the command. The most significant bit of the command is transferred first.
- Three address bytes are clocked in to specify the starting address location of the first byte to read within the memory array. A total of 24 clocks are required to transfer the address. The most significant bit of the address (A[23]) is transferred first.
- Following the three address bytes, an additional dummy byte must be clocked into the device. This requires eight clock cycles to complete.
- Following transfer of the dummy byte, hardware switches the $\overline{HOLD}$, $\overline{WP}$, and SI pins to outputs.
- Data is output on the $\overline{HOLD}$, $\overline{WP}$, SO, and SI pins. As a result, each byte transfer requires two clock cycles, one-fourth that of the 03h/0Bh commands. The data is always output with the most significant bit of the byte transferred first. The number of bytes transferred is determined by software. The transfer can be anywhere from a single byte to the entire memory array. Each data byte is shifted out of the device as follows:
  - First data clock: bit 7 is output on the $\overline{HOLD}$ pin
  - First data clock: bit 6 is output on the $\overline{WP}$ pin
  - First data clock: bit 5 is output on the SO pin
  - First data clock: bit 4 is output on the SI pin
  - Second data clock: bit 3 is output on the $\overline{HOLD}$ pin
  - Second data clock: bit 2 is output on the $\overline{WP}$ pin
  - Second data clock: bit 1 is output on the SO pin
  - Second data clock: bit 0 is output on the SI pin
- Deasserting the $\overline{CS}$ pin terminates the read operation and puts the $\overline{HOLD}$, $\overline{WP}$, SO, SI pins into a high-impedance state. The $\overline{CS}$ pin can be deasserted at any time and does not require that a full byte of data be read.

When the last byte (0FFFFFh) of the memory array has been read, the device continues reading from the beginning of the array (000000h). No delays are incurred when wrapping around from the end of the array to the beginning of the array.

© 2022 Renesas Electronics

7.4 XiP Read (EBh), XiP Read with Double-word Aligned Address (E7h)

The XiP Read command (EBh) is similar to the Quad Output Read Array command, except that four bits of address are clocked into the device on every clock cycle, rather than just one. The E7h command is similar to the EBh command but works only on double-word aligned (DWA) addresses. As such, the E7h command ignores address bits A[1:0] and internally assumes that these two bits are always 2'b00. This allows us to run the E7h command at faster clock speeds or fewer dummy clock cycles compared to the EBh command.

The EBh command can operate in either DWA mode or non-DWA mode depending on the state of the DWA bit in Status Register 5. See Section 6.7, Status Register 5 for more information.

7.4.1 Transfer Format

The initial EBh/E7h command follows the 1-4-4 transfer format described in Section 5.6, where the command is transferred on the SI pin, and the address and data are transferred on the SI (IO_0), SO (IO_1), $\overline{WP}$ (IO_2), and $\overline{HOLD}$ (IO_3) pins. See Figure 15 for a timing diagram of this command.

Subsequent EBh/E7h commands follow the 0-4-4 transfer format described in Section 5.6, where the address and data are transferred on the SI (IO_0), SO (IO_1), $\overline{WP}$ (IO_2), and $\overline{HOLD}$ (IO_3) pins. No command transfer is required. See Figure 16 for a timing diagram of this command.

7.4.2 Mode Bits

The EBh and E7h commands follow the 1-4-4 and 0-4-4 transfer formats as described above. During the initial transfer, an 8-bit mode field is transferred immediately following the last address byte; it is decoded by hardware to determine if the device is placed into XiP continuous read mode. If so, then subsequent transfers do not require the command field, resulting in a 0-4-4 transfer type. This mode increases performance by saving 8 clocks cycles per transfer. For more information on this mode, see Section 5.6, XiP Mode Operation.

7.4.3 Transfer Sequence — Initial Transfer

To perform the initial XiP Mode Read operation, the $\overline{CS}$ pin is asserted and the information transferred as follows:

- The EBh/E7h command is clocked into the device. Eight clocks are required to transfer the command. The most significant bit of the command is transferred first. This field is transferred on the SI pin.
- Three address bytes are clocked in to specify the starting address location of the first byte to read within the memory array. A total of 6 clocks are required to transfer the address. The most significant bit of the address (A[23]) is transferred first. Each address byte is shifted out of the device as follows:
  - First clock: address bit 23 is input on the $\overline{HOLD}$ pin
  - First clock: address bit 22 is input on the $\overline{WP}$ pin
  - First clock: address bit 21 is input on the SO pin
  - First clock: address bit 20 is input on the SI pin
  - Second clock: address bit 19 is input on the $\overline{HOLD}$ pin
  - Second clock: address bit 18 is input on the $\overline{WP}$ pin
  - Second clock: address bit 17 is input on the SO pin
  - Second clock: address bit 16 is input on the SI pin
  - Third and fourth clocks: A15:A8 are shifted in same as above
  - Fifth and sixth clocks: A7:A0 are shifted in same as above
- Following the three address bytes, a programmable number of dummy bytes must be clocked into the device. See the Section 7.4.5 below for more information. Note that the Mode bits are treated as part of the dummy bytes and must be clocked in to the device.
- Following transfer of the dummy bytes, hardware switches the SI (IO_0), SO (IO_1), $\overline{WP}$ (IO_2), and $\overline{HOLD}$ (IO_3) pins to outputs.
- Data is output on the $\overline{HOLD}$, $\overline{WP}$, SO, and SI pins. As a result, each byte transfer requires two clock cycles. The data is always output with the most significant bit of the byte transferred first. Each data byte is shifted out of the device as follows:
  - First clock: bit 7 is output on the $\overline{HOLD}$ pin
  - First clock: bit 6 is output on the $\overline{WP}$ pin

© 2022 Renesas Electronics

- First clock: bit 5 is output on the SO pin
- First clock: bit 4 is output on the SI pin
- Second clock: bit 3 is output on the $\overline{HOLD}$ pin
- Second clock: bit 2 is output on the $\overline{WP}$ pin
- Second clock: bit 1 is output on the SO pin
- Second clock: bit 0 is output on the SI pin

- Deasserting the $\overline{CS}$ pin terminates the read operation and puts the SI (IO_0), SO (IO_1), $\overline{WP}$ (IO_2), and $\overline{HOLD}$ (IO_3) pins into a high-impedance state. The $\overline{CS}$ pin can be deasserted at any time and does not require that a full byte of data be read.
- When the last byte (0FFFFFh) of the memory array has been read, the device continues reading from the beginning of the array (000000h). No delays are incurred when wrapping around from the end of the array to the beginning of the array.

7.4.4 Transfer Sequence — Subsequent Transfers

To perform subsequent XiP Mode Read operations, the $\overline{CS}$ pin is asserted and the information transferred as follows:

- Three address bytes are clocked in to specify the starting address location of the first byte to read within the memory array. A total of 6 clocks are required to transfer the address. The most significant bit of the address (A[23]) is transferred first. The address is transferred on the bus in the same manner described in Section 7.4.3 above.
- Following the three address bytes, a programmable number of dummy bytes must be clocked into the device. See Section 7.4.5 below for more information. Note that the Mode bits are treated as part of the dummy bytes and must be clocked in to the device.
- Data is output on the $\overline{HOLD}$, $\overline{WP}$, SO, and SI pins. As a result, each byte transfer requires two clock cycles. The data is always output with the most significant bit of the byte transferred first. Data is shifted out onto the bus in the same manner described in Section 7.4.3 above.
- Deasserting the $\overline{CS}$ pin terminates the read operation and puts the SI (IO_0), SO (IO_1), $\overline{WP}$ (IO_2), and $\overline{HOLD}$ (IO_3) pins into a high-impedance state. The $\overline{CS}$ pin can be deasserted at any time and does not require that a full byte of data be read.

When the last byte (0FFFFFh) of the memory array has been read, the device continues reading from the beginning of the array (000000h). No delays are incurred when wrapping around from the end of the array to the beginning of the array.

© 2022 Renesas Electronics

7.4.5 Programmable Number of Dummy Clocks

The number of dummy clocks required differs depending on the frequency, the type of command being performed, and the state of bit 0 (DWA) of Status Register 5. This relationship is shown in Table 21. The number of Dummy clocks is set using bits 6:4 (DC[2:0]) of Status Register 5. See Section 6.7, Status Register 5 for more information. Note that the number of dummy clocks includes the 2 SCK clock periods required to clock in the M[7:0] mode bits.

Table 21. Frequency and Number of Dummy Clocks Based on Command Type in Non-Wrap Mode (default)

Cmd	DWA Bit	DC[2:0]	Dummy Clocks	XiP enabled (044) (1.65 V - 3.6 V)	XiP enabled (044) (2.7 V - 3.6 V)	XiP disabled (144) (1.65 V - 3.6 V)	XiP disabled (144) (2.7 V - 3.6 V)
				SCK Frequency (MHz)			
EBh	0	000	25	25	30	25	30
	0	001	45	45	55	45	45
	0	010	75	75	85	60	60
	0	011	104	104	108	85	90
	0	100	104	104	108	108	108
	1	000	45	45	55	65	65
	1	001	108	108	108	108	133
	1	010	120	120	133	120	133
	1	011	120	120	133	120	133
	1	100	120	120	133	120	133
E7h	x	000	45	45	50	50	50
	x	001	96	96	96	104	104
	x	010	104	104	120	108	120
	x	011	108	108	120	108	120
	x	100	108	108	120	108	120

The EBh command can operate on both doubleword aligned (DWA = 1) and non-doubleword aligned (DWA = 0) addresses. The E7h command works only on doubleword aligned addresses, so the DWA bit is ignored.

Table 22. Frequency and Number of Dummy Clocks Based on Command Type in Wrap Mode (77h)

Cmd	DWA Bit	DC[2:0]	Dummy Clocks	XiP enabled (044) (1.65 V - 3.6 V)	XiP enabled (044) (2.7 V - 3.6 V)	XiP disabled (144) (1.65 V - 3.6 V)	XiP disabled (144) (2.7 V - 3.6 V)
				SCK Frequency (MHz)			
EBh	0	000	2	25	25	25	30
	0	001	4	40	40	45	50
	0	010	6	60	60	70	85
	0	011	8	75	75	85	96
	0	100	10	96	108	85	104
	1	000	2	40	40	50	50
	1	001	4	75	75	85	96
	1	010	6	100	120	90	100
	1	011	8	108	120	96	100
	1	100	10	108	120	96	104
E7h	x	000	2	40	40	45	50
	x	001	4	80	80	85	96
	x	010	6	100	120	85	104
	x	011	8	108	120	90	104
	x	100	10	108	120	90	104

The EBh command can operate on both doubleword aligned (DWA = 1) and non-doubleword aligned (DWA = 0) addresses. The E7h command works only on doubleword aligned addresses, so the DWA bit is ignored.

© 2022 Renesas Electronics

7.5 Block Erase (20h, 52h, D8h)

A block of 4-, 32-, or 64-kBytes (kB) can be erased (all bits set to the logical “1” state) in a single operation by using one of three different forms of the Block Erase command.

- The 20h command is used for a 4 kB erase
- The 52h command is used for a 32 kB erase
- The D8h command is used for a 64 kB erase

7.5.1 Command Prerequisites

Before a Block Erase command can be issued, the Write Enable (06h) command must have been previously issued to the device to set the WEL bit of Status Register 1.

7.5.2 Transfer Format

The 20h/52h/D8h command follows the 1-1-0 transfer format described in Section 5.2, where the command and address are transferred on the SI pin. The address represents the block to be erased. No data is transferred for this command.

7.5.3 Transfer Sequence

To perform the Block Erase operation, the $\overline{CS}$ pin is asserted and the information transferred as follows:

- The appropriate command is clocked into the device. Eight clocks are required to transfer the command. The most significant bit of the command is transferred first.
- Three address bytes are clocked in to specify the address location within the 4-, 32-, or 64-kByte block to be erased. A total of 24 clocks are required to transfer the address. The most significant bit of the address (A[23]) is transferred first.

See Table 20 for more information on the transfer sequence for this command.

7.5.4 Erase Operation

- When the $\overline{CS}$ pin is deasserted, the device starts the erase of the appropriate block. The erasing of the block is internally self-timed and takes place in time t_{BLKE}. Since the Block Erase command erases a region of bytes, the lower order address bits do not need to be decoded by the device. Depending on the command issued, the address is treated as follows:
- For a 4 kB erase, address bits A11 - A0 are ignored by the device and their values can be either a logical 1 or 0.
- For a 32 kB erase, address bits A14 - A0 are ignored by the device.
- For a 64 kB erase, address bits A15 - A0 are ignored by the device.

7.5.5 Command Status

While the device is executing, a successful erase cycle, bit 0 in Status Register 1 (SR1) indicates that the device is busy. For faster throughput, it is recommended that Status Register 1 be polled rather than waiting the t_{BLKE} time to determine if the device has finished erasing. At some point before the erase cycle completes, the WEL bit in the Status Register is reset back to the logical “0” state.

7.5.6 Programming Restrictions

The following events can cause the block erase operation to be aborted. If any of these events occur, the WEL bit in Status Register 1 is reset back to the logic 0 state.

- The $\overline{CS}$ pin must be deasserted on a byte boundary (multiples of eight bits). Otherwise, the device aborts the operation and no erase operation is performed.
- Despite the lower order address bits not being decoded by the device, the complete three address bytes must still be clocked into the device before the $\overline{CS}$ pin is deasserted. If the address is incomplete, the operation is aborted.

© 2022 Renesas Electronics

- If the memory is in the protected state, the Block Erase command cannot be executed and the device returns to the idle state once the $\overline{CS}$ pin has been deasserted.

7.5.7 Error Reporting

The device incorporates an intelligent erase algorithm that can detect when a byte location fails to erase properly. If an erase error occurs, it is indicated by the EE and PE bits in Status Register 4. See Section 6.6, Status Register 4 for more information.

7.6 Chip Erase (60h, C7h)

The entire memory array can be erased in a single operation by using the Chip Erase command. Two commands (60h and C7h) can be used for the Chip Erase command. There is no difference in device functionality when utilizing these two commands, so they can be used interchangeably.

7.6.1 Command Prerequisites

Before a Chip Erase command can be issued, the Write Enable (06h) command must have been previously issued to the device to set the WEL bit of Status Register 1.

This command is not executed if any memory region is protected by either the block protect bits or the individual block locks. For more information on the block protect bits, see bits 4:2 (BP[2:0]) of Section 6.3, Status Register 1. For more information on enabling individual lock bits, see bit 2 (WPS) of Section 6.5, Status Register 3.

7.6.2 Transfer Format

The 60h/C7h commands follow the 1-0-0 transfer format described in Section 5.2, where the command is transferred on the SI pin. No address or data are transferred for this command. See Figure 3 for a timing diagram of this operation.

7.6.3 Transfer Sequence

To perform the Chip Erase operation, the $\overline{CS}$ pin is asserted and the information transferred as follows:

- The 60h/C7h command is clocked into the device. Eight clocks are required to transfer the command. The most significant bit of the command is transferred first.
- When the $\overline{CS}$ pin is deasserted, the device begins to erase the entire memory array. The erasing of the device is internally self-timed and takes place in time t_{CHPE}.

See Table 20 for more information on the transfer sequence for this command.

7.6.4 Device Status

While the device is executing a successful erase cycle, the $\overline{RDY}$/BSY bit in Status Register 1 can be read and indicates the device is busy. For faster throughput, it is recommended that Status Register 1 be polled rather than waiting the t_{CHPE} time to determine if the device has finished erasing. At some point before the erase cycle completes, the WEL bit in SR1 is reset back to the logical “0” state.

7.6.5 Programming Restrictions

The Chip Erase command adheres to the following programming restrictions. The following events can cause the chip erase operation to be aborted. If either one occurs, the WEL bit in Status Register 1 is reset back to the logical “0” state.

- The $\overline{CS}$ pin must be deasserted on a byte boundary (multiple of eight bits). Otherwise, the device aborts the operation and no erase operation is performed.
- If any block in the memory is in the protected state, the Chip Erase command cannot be executed and the device returns to the idle state once the $\overline{CS}$ pin has been deasserted.
- A Chip Erase command cannot be suspended by executing the Program/Erase Suspend (75h) command. Hardware ignores the Program/Erase Suspend command if it is issued during a Chip Erase.

© 2022 Renesas Electronics

7.6.6 Error Reporting

The device incorporates an intelligent erase algorithm that can detect when a byte location fails to erase properly. If an erase error occurs, it is indicated by the EE and PE bits in Status Register 4. For more information, see Section 6.6, Status Register 4.

7.7 Byte/Page Program (02h)

The Byte/Page Program command allows anywhere from a single byte of data to 256 bytes of data to be programmed into previously erased memory locations. An erased memory location is one that has all eight bits set to the logical “1” state (a byte value of FFh).

7.7.1 Command Prerequisites

Before a Byte/Page Program command can be issued, the Write Enable (06h) command must have been previously issued to the device to set the WEL bit of Status Register 1.

7.7.2 Transfer Format

The 02h command follows the 1-1-1 transfer format described in Section 5.2, where the command, address, and data are all transferred on the SI pin. See Figure 9 for a timing diagram of this transaction.

7.7.3 Transfer Sequence

To perform the Byte/Page Program operation, the $\overline{CS}$ pin is asserted and the information transferred as follows:

- The 02h command is clocked into the device. Eight clocks are required to transfer the command. The most significant bit of the command is transferred first.
- Three address bytes are clocked in to specify the starting address location of the first byte to read within the memory array. A total of 24 clocks are required to transfer the address. The most significant bit of the address (A[23]) is transferred first.
- Each byte transfer requires eight clock cycles. The data is always input with the most significant bit of the byte transferred first. The number of bytes transferred is determined by software. The transfer can be anywhere from a single byte to the entire buffer. If less than 256 bytes of data were sent to the device, then the remaining bytes within the page are not programmed and remain in the erased state (FFh).
- Once the $\overline{CS}$ pin is deasserted, hardware moves the data from the buffer to the memory. The programming of the data bytes is internally self-timed and takes place in time t_{PP} or t_{BP} if only programming a single byte.

See Table 20 for more information on the transfer sequence for this command.

7.7.4 Device Status

While the data is being transferred, bit 0 ($\overline{RDY}$/BSY) of Status Register 1 can be read and indicates that the device is busy. For faster throughput, it is recommended that Status Register 1 be polled rather than waiting the t_{BP} or t_{PP} time to determine if the data bytes have finished programming.

7.7.5 Programming Restrictions

The Byte/Page Program command adheres to the following programming restrictions. If any of the following conditions occur, the programming cycle is aborted and the WEL bit in Status Register 1 is reset back to the logic ‘0’ state.

Deassertion of the $\overline{CS}$ Pin

The $\overline{CS}$ pin must be deasserted on even byte boundaries (multiples of eight bits). Otherwise, the device aborts the operation and no data is programmed into the memory array.

Protected Memory

If the memory is in a protected state, then the Byte/Page Program command is not executed, and the device returns to the idle state once the $\overline{CS}$ pin has been deasserted.

© 2022 Renesas Electronics

Page Address Boundary

If the starting memory address denoted by A[23:0] does not fall on an even 256-byte page boundary (A[7:0] are not all 0), then special circumstances regarding which memory locations to be programmed apply. In this situation, any data sent to the device that exceeds the page size wraps around back to the beginning of the same page.

For example, if the starting address denoted by A23-A0 is 0000FEh, and three bytes of data are sent to the device, then the first two bytes of data is programmed at addresses 0000FEh and 0000FFh while the last byte of data is programmed at address 000000h. The remaining bytes in the page (addresses 000001h through 0000FDh) are not programmed and remain in the current state. Also, if more than 256 bytes of data are sent to the device, then only the last 256 bytes sent are latched into the internal buffer.

Incomplete Address or Data

If the device receives either an incomplete address, or an incomplete data byte, the operation is aborted and hardware clears the WEL bit is Status Register 1.

7.8 Sequential Program Mode (ADh/AFh)

The Sequential Program Mode improves throughput over the Byte/Page Program command when the Byte/Page Program command is used to program single bytes only into consecutive address locations. For example, some systems may be designed to program only a single byte of information at a time and cannot utilize a buffered Page Program operation due to design restrictions. In such a case, the system would normally have to perform multiple Byte Program operations in order to program data into sequential memory locations. This approach can add considerable system overhead and SPI bus traffic.

The Sequential Programming Mode helps reduce system overhead and bus traffic by incorporating an internal address counter that keeps track of the byte location to program, thereby eliminating the need to supply an address sequence to the device for every byte being programmed.

7.8.1 Command Prerequisites

Before a Sequential Program command can be issued, the Write Enable (06h) command must have been previously issued to the device to set the WEL bit of Status Register 1.

When using the Sequential Program mode, all address locations to be programmed must be in the erased state.

7.8.2 Transfer Format

The initial ADh/AFh command follows the 1-1-1 transfer format described in Section 5.2, where the command, address, and data are all transferred on the SI pin. See Figure 9 for a timing diagram of this transaction.

All subsequent ADh/AFh commands follow the 1-0-1 transfer format described in Section 5.2, where the command and data are both transferred on the SI pin. Subsequent accesses do not require an address. See Figure 6 for a timing diagram of this transaction.

7.8.3 Transfer Sequence — Initial Transfer

To perform the initial Sequential Program operation, the $\overline{CS}$ pin is asserted and the information transferred as follows:

- The AFh/ADh command is clocked into the device. Eight clocks are required to transfer the command. The most significant bit of the command is transferred first.
- Three address bytes are clocked in to specify the starting address location of the first byte to written to within the device (typically the memory array). A total of 24 clocks are required to transfer the address. The most significant bit of the address (A[23]) is transferred first.
- Transfer the first byte of data. This requires eight clock cycles. The data is always input with the most significant bit of the byte transferred first.
- Deasserting the $\overline{CS}$ pin starts the internally self-timed program operation, and the byte of data is programmed into the memory location specified by the A23:A0.

See Table 20 for more information on the transfer sequence for this command.

© 2022 Renesas Electronics

7.8.4 Transfer Sequence — Subsequent Transfers

To perform subsequent Sequential Program operations, the $\overline{CS}$ pin is asserted and the information transferred as follows:

- The AFh/ADh command is clocked into the device. Eight clocks are required to transfer the command. The most significant bit of the command is transferred first.
- Because the initial transfer has already occurred and hardware knows already knows the location of the next byte to be programmed, the address field is not necessary. The command can be followed by the next data byte.
- Transfer the next byte of data. This requires eight clock cycles. The data is always input with the most significant bit of the byte transferred first.
- Deasserting the $\overline{CS}$ pin starts the internally self-timed program operation, and the byte of data is programmed into the memory location specified by the internal address counter. There is no need to reissue the Write Enable command once the Sequential Program Mode has been entered.
- When the last desired byte has been programmed into the memory array, the Sequential Program Mode operation can be terminated by reasserting the $\overline{CS}$ pin and sending the Write Disable command to the device to reset the WEL bit in Status Register 1.

7.8.5 Program Status

While the device is programming a byte, the $\overline{RDY}$/BSY bit in Status Register 1 can be read to determine if the device is busy. The programming of the data bytes is internally self-timed and takes place in time t_{PP} (page) or t_{BP} (single byte).

For faster throughput, it is recommended that the Status Register be polled at the end of each program cycle rather than waiting the t_{BP} or t_{PP} time to determine if the byte has finished programming before starting the next operation.

7.8.6 Commands Allowed and Not Allowed in Sequential Program Mode

When the device is busy executing a self-timed program/erase operation ($\overline{RDY}$/BSY bit in SR1 = 1), then it normally ignores most commands from the user. However, there are a handful of commands which are accepted by the device.

Similarly, if the device is not busy ($\overline{RDY}$/BSY bit in SR1 = 0), but is in Sequential Programming mode, only some commands are accepted, and others are rejected by the device.

Table 23 shows which commands can and cannot be executed with the device is in Sequential Program mode.

Table 23. Command Behavior During Sequential Programming Mode

Command Name	Command Code(s)	During Sequential Programming Mode ($\overline{RDY}$/BUSY = 0, SPM = 1)
Read Array	03h, 3Bh, 6Bh, EBh, E7h, 0Bh	Not allowed
Block Erase	20h, 52h, D8h	Not allowed
Chip Erase	60h, C7h	Not allowed
Byte/Page Program	02h, A2h, 32h	Not allowed
Sequential Programming	ADh, AFh	Allowed
Program/Erase Suspend	B0h, 75h	Not Allowed
Program/Erase Resume	D0h, 7Ah	Not allowed
Write Enable	06h	Allowed
Write Disable	04h	Allowed
Volatile Write Enable	50h	Not allowed
Individual Block Lock	36h	Not allowed
Individual Block Unlock	39h	Not allowed
Global Block Lock	7Eh	Not allowed
Global Block Unlock	98h	Not allowed
Read Block Lock Status	3Ch, 3Dh	Not allowed
Program OTP Security Register	9Bh	Not allowed

© 2022 Renesas Electronics

Table 23. Command Behavior During Sequential Programming Mode (Cont.)

Command Name	Command Code(s)	During Sequential Programming Mode (RDY/BUSY = 0, SPM = 1)
Read OTP Security Register	4Bh	Not allowed
Read Status Registers (direct)	05h, 35h, 15h	Allowed
Read Status Registers (indirect)	65h	Allowed
Write Status Registers (direct)	01h, 31h, 11h	Not allowed
Write Status Registers (indirect)	71h	Not allowed
Status Register Lock	6Fh	Not allowed
Terminate	F0h	Allowed
Enable Reset	66h	Allowed
Reset Device	99h	Allowed
Read Mfg ID and Device ID	9Fh, 90h, 94h	Allowed
Deep Power-Down	B9h	Not allowed
Resume from Deep Power-Down	ABh	Not allowed
Ultra Deep Power-Down	79h	Not allowed
Read SFDP	5Ah	Not allowed
Set Burst with Wrap	77h	Not allowed

7.8.7 Programming Restrictions

The Sequential Program mode adheres to the following programming restrictions.

Multiple Data Bytes per Program Cycle

If more than one byte of data is clocked in during a program cycle, then only the last byte of data sent on the SI pin is stored in the internal latches. The programming of each byte is internally self-timed and takes place in time t_{BP}.

Deasserting the $\overline{CS}$ Pin

For each program cycle, a complete byte of data must be clocked into the device before the $\overline{CS}$ pin is deasserted, and the $\overline{CS}$ pin must be deasserted on even byte boundaries (multiples of eight bits). Otherwise, the device aborts the operation, and the byte of data is not programmed into the memory array. Also, hardware resets the WEL bit in Status Register 1.

Protected Memory

If the address initially specified by A[23:0] points to a memory location within a block that is in the protected state, then the Sequential Program Mode command is not executed, and the device returns to the idle state once the $\overline{CS}$ pin has been deasserted. The WEL bit in the Status Register is also reset back to the logical “0” state.

Sequential Program mode does not automatically skip over protected blocks. Therefore, once the highest unprotected memory location in a programming sequence has been programmed, the device automatically exits the Sequential Program mode and resets the WEL bit in Status Register 1.

For example, if block 1 was protected and block 0 was currently being programmed, once the last byte of block 0 was programmed, the Sequential Program mode would automatically end. To continue programming with block 2, the Sequential Program mode would have to be restarted by supplying the ADh or AFh command, the three address bytes, and the first byte of block 2 to program.

Address Wrapping

There is no address wrapping when using the Sequential Program Mode. Therefore, when the last byte (0FFFFFh) of the memory array has been programmed, the device automatically exits the Sequential Program mode and resets the WEL bit in Status Register 1.

64 kB Block Accesses

If during a Sequential Program operation, the address increments into a 64 kB block where an erase operation has been suspended, hardware exits the Sequential Program mode.

© 2022 Renesas Electronics

Clearing the WEL Bit in Status Register 1

If the WEL bit in Status Register 1 is cleared at any time during a sequential programming operation, hardware exits the Sequential Program mode.

7.8.8 Error Reporting

The device incorporates an intelligent programming algorithm that can detect when a byte location fails to program properly. If a programming error arises, it is indicated by the EE and PE bits in Status Register 4.

7.9 Dual Output Byte/Page Program (A2h)

The Dual Output Byte/Page Program (A2h) command is similar to the standard Byte/Page Program command (02h) and can be used to program anywhere from a single byte of data up to 256 bytes of data into previously erased memory locations. Unlike the standard Byte/Page Program command, however, the Dual Output Byte/Page Program command allows two bits of data to be clocked into the device on every clock cycle rather than just one.

7.9.1 Command Prerequisites

Before the Dual Output Byte/Page Program command can be executed, the Write Enable command (06h) must have been previously issued to set the Write Enable Latch (WEL) bit in Status Register 1.

7.9.2 Transfer Format

The A2h command follows the 1-1-2 transfer format described in Section 5.3, where the command and address are transferred on the SI pin, and input data is transferred on the SI and SO pins. To facilitate this transfer, hardware switches the SO pin to an input as soon as the command has been decoded and the address transferred. See Figure 11 for a timing diagram of this transaction.

7.9.3 Transfer Sequence

To perform a Dual Output Page Program operation, the $\overline{CS}$ pin is asserted and the information transferred as follows:

- The A2h command is clocked into the device. Eight clocks are required to transfer the command. The most significant bit of the command is transferred first.
- Three address bytes are clocked in to specify the starting address location of the first byte to written. A total of 24 clocks are required to transfer the address. The most significant bit of the address (A[23]) is transferred first.
- The first byte of data is transferred on the SI and SO pins. This requires four clock cycles. The data is always input with the most significant bit on the SO pin during each clock as shown below. Like the standard Byte/Page Program command, all data clocked into the device is stored to an internal buffer.
  - First data clock: bit 7 is input on the SO pin
  - First data clock: bit 6 is input on the SI pin
  - Second data clock: bit 5 is input on the SO pin
  - Second data clock: bit 4 is input on the SI pin
  - Third data clock: bit 3 is input on the SO pin
  - Third data clock: bit 2 is input on the SI pin
  - Fourth data clock: bit 1 is input on the SO pin
  - Fourth data clock: bit 0 is input on the SI pin
  - Subsequent data bytes are transmitted in the same sequence as above

7.9.4 Program Status

While the device is programming a byte, Status Register 1 can be read to determine if the device is busy. The programming of the data bytes is internally self-timed and takes place in time t_{PP} (page) or t_{BP} (single byte).

For faster throughput, it is recommended that the Status Register be polled at the end of each program cycle rather than waiting the t_{BP} or t_{PP} time to determine if the byte has finished programming before starting the next operation.

© 2022 Renesas Electronics

7.9.5 Programming Restrictions

The Dual Output Byte/Page Program operation adheres to the following programming restrictions.

Page Address Boundary

If the starting memory address denoted by A[23:0] does not fall on a 256-byte page boundary (A[7:0] are not all 0), then special circumstances regarding which memory locations are to be programmed apply. In this situation, any data sent to the device that exceeds the end of the page wraps around to the beginning of the same page.

If the starting address denoted by A[23:0] is 0000FEh and three bytes of data are sent to the device, then the first two bytes of data is programmed at addresses 0000FEh and 0000FFh, while the last byte of data is programmed at address 000000h. The remaining bytes in the page (addresses 000001h through 0000FDh) are not programmed and remain in the erased state (FFh).

Data Transfers

When the $\overline{CS}$ pin is deasserted, the device programs the data stored in the internal buffer into the appropriate memory array locations based on the starting address specified by A[23:0] and the number of data bytes sent to the device. If fewer than 256 bytes of data is sent to the device, then the remaining bytes within the page are not programmed and remains in the erased state (FFh). Conversely, if more than 256 bytes of data are sent to the device, then only the last 256 bytes sent are latched into the internal buffer.

Deassertion of the $\overline{CS}$ Pin

The three address bytes and at least one complete byte of data must be clocked into the device before the $\overline{CS}$ pin can be deasserted. Also, the $\overline{CS}$ pin must be deasserted on a byte boundary (multiple of eight bits). Otherwise, the device aborts the operation and no data is programmed into the memory array.

Protected Memory

If the address specified by A[23:0] points to a memory location within a block that is in the protected state, then the Byte/Page Program command is not executed, and the device returns to the idle state once the $\overline{CS}$ pin has been deasserted. The WEL bit in the Status Register is reset back to the Logical 0 state if the program cycle is aborted

7.9.6 Error Reporting

The device incorporates an intelligent programming algorithm that can detect when a byte location fails to program properly. If a programming error arises, it is indicated by the EE and PE bits in Status Register 4.

© 2022 Renesas Electronics

7.10 Quad Output Page Program (32h)

The Quad Output Page Program command allows between 1 to 256 bytes of data to be programmed at previously erased memory locations.

7.10.1 Command Prerequisites

Before a Sequential Program command can be issued, the Write Enable (06h) command must have been previously issued to the device to set the WEL bit of Status Register 1. For more information on the QE bit, see Section 6.3, Status Register 1. Also, the Quad Enable bit (QE bit in Status Register 2) must be set. For more information on the QE bit, see Section 6.4, Status Register 2.

7.10.2 Transfer Format

The 32h command follows the 1-1-4 transfer format described in Section 5.4, where the command and address are transferred on the SI pin, and data is transferred on the $\overline{\text{HOLD}}$, $\overline{\text{WP}}$, SO, and SI pins. See Figure 13 for a timing diagram of this operation.

7.10.3 Transfer Sequence

To perform the Quad Output Page Program operation, the $\overline{\text{CS}}$ pin is asserted and the information transferred as follows:

- The 32h command is clocked into the device. Eight clocks are required to transfer the command. The most significant bit of the command is transferred first.
- Three address bytes are clocked in to specify the starting address location of the first byte to read within the memory array. A total of 24 clocks are required to transfer the address. The most significant bit of the address (A[23]) is transferred first.
- Following transfer of the last address byte, hardware switches the SO pin to an input.
- Data is input on the $\overline{\text{HOLD}}$, $\overline{\text{WP}}$, SO, and SI pins. As a result, each byte transfer requires only two clock cycles to complete. The data is always input with the most significant bit of the byte transferred first. The number of bytes transferred is determined by software. The transfer can be anywhere from a single byte to the entire memory array. Each data byte is shifted into the device as follows:
  - First data clock: bit 7 is input on the $\overline{\text{HOLD}}$ pin
  - First data clock: bit 6 is input on the $\overline{\text{WP}}$ pin
  - First data clock: bit 5 is input on the SO pin
  - First data clock: bit 4 is input on the SI pin
  - Second data clock: bit 3 is input on the $\overline{\text{HOLD}}$ pin
  - Second data clock: bit 2 is input on the $\overline{\text{WP}}$ pin
  - Second data clock: bit 1 is input on the SO pin
  - Second data clock: bit 0 is input on the SI pin
  - Additional data bytes are transferred on the four pins in the same manner as shown above.

7.10.4 Programming Restrictions

The Quad Output Byte/Page Program command adheres to the following programming restrictions

- The $\overline{\text{CS}}$ pin must be deasserted on a byte boundary (multiples of eight bits). Otherwise, the device aborts the operation and no action is taken.
- If the memory is in a protected state, then the Byte/Page Program command is not executed, and the device returns to the idle state once the $\overline{\text{CS}}$ pin has been deasserted.
- If the starting memory address denoted by A[23:0] does not fall on an even 256-byte page boundary (A[7:0] are not all 0), then special circumstances regarding which memory locations to be programmed apply. In this situation, any data sent to the device that exceeds the page size wraps around back to the beginning of the same page.

  For example, if the starting address denoted by A23-A0 is 0000FEh, and three bytes of data are sent to the device, then the first two bytes of data is programmed at addresses 0000FEh and 0000FFh while the last byte

© 2022 Renesas Electronics

of data is programmed at address 000000h. The remaining bytes in the page (addresses 000001h through 0000FDh) are not programmed and remain in the current state. Also, if more than 256 bytes of data are sent to the device, then only the last 256 bytes sent are latched into the internal buffer.

- If the device receives either an incomplete address, or an incomplete data byte, the operation is aborted and hardware clears the WEL bit is Status Register 1.

7.10.5 Error Reporting

The device also incorporates an intelligent programming algorithm that can detect when a byte location fails to program properly. If a programming error arises, it is indicated by the EE and PE bits in Status Register 4.

7.11 Program/Erase Suspend (75h/B0h)

The device supports two Program/Erase Suspend commands, 75h and B0h, that perform the exact same function. The 75h command can be used for legacy software, and the B0h command is used for compatibility with future implementations.

In some code plus data storage applications, it is often necessary to process certain high-level system interrupts that require relatively immediate reading of code or data from the Flash memory. In such an instance, it may not be possible for the system to wait the microseconds or milliseconds required for the Flash memory to complete a program or erase cycle. The Program/Erase Suspend command allows a program or erase operation in progress to be suspended so that other device operations can be performed. For example, by suspending an erase operation to a particular block, the system can perform functions such as a program or read to a different block.

7.11.1 Transfer Format

The 75h and B0h commands follow the 1-0-0 transfer format described in Section 5.2, where the command is transferred on the SI pin. No address or data are transferred for this command. See Figure 3 for a timing diagram of this operation.

7.11.2 Transfer Sequence

To perform the Program Erase/Suspend operation, the $\overline{CS}$ pin is asserted and the information transferred as follows:

- The 75h or B0h command is clocked into the device. Eight clocks are required to transfer the command. The most significant bit of the command is transferred first.
- When the $\overline{CS}$ pin is deasserted, the device suspends the program.

See Table 20 for more information on the transfer sequence for this command.

7.11.3 Command Behavior During a Program/Erase Operation

If an attempt is made to perform an operation that is not allowed during a program or erase suspend, such as a Write Status Register operation, then the device simply ignores the command and no operation is performed. The state of the WEL bit in Status Register 1 is not affected. Note that in the table below, the $\overline{RDY}$/BSY bit is located in Status Register 1. The PS and ES bits are located in Status Register 5.

© 2022 Renesas Electronics

Table 24. Command Behavior During Program/Erase or Program/Erase Suspend Operations

Command	Command Code(s)	During Program or Erase (RDY/BSY = 1, PS = x, ES = x)	During Program Suspend (RDY/BSY = 0, PS = 1, ES = x)	During Erase Suspend (RDY/BSY = 0, PS = 0, ES = 1)
Read Array	03h, 0Bh, 3Bh, 6Bh, EBh, E7h	Not allowed	Allowed	Allowed
Block Erase	20h, 52h, D8h	Not allowed	Not allowed	Not allowed
Chip Erase	60h, C7h	Not allowed	Not allowed	Not allowed
Byte/Page Program	02h, A2h, 32h	Not allowed	Not allowed	Allowed[1]
Sequential Programming	ADh, AFh	Not allowed	Not allowed	Allowed(1)
Program/Erase Suspend	B0h, 75h	Allowed	Not allowed	Not allowed
Program/Erase Resume	D0h, 7Ah	Not allowed	Allowed	Allowed
Write Enable	06h	Not allowed	Allowed	Allowed
Write Disable	04h	Not allowed	Allowed	Allowed
Volatile Write Enable	50h	Not allowed	Allowed	Allowed
Individual Block Lock	36h	Not allowed	Not allowed	Not allowed
Individual Block Unlock	39h	Not allowed	Not allowed	Not allowed
Global Block Lock	7Eh	Not allowed	Not allowed	Not allowed
Global Block Unlock	98h	Not allowed	Not allowed	Not allowed
Read Block Lock Status	3Ch, 3Dh	Not allowed	Allowed	Allowed
Program OTP Security Register	9Bh	Not allowed	Not allowed	Not allowed
Read OTP Security Register	4Bh	Not allowed	Allowed	Allowed
Read Status Registers (direct)	05h, 35h, 15h	Allowed	Allowed	Allowed
Read Status Registers (indirect)	65h	Allowed	Allowed	Allowed
Write Status Registers (direct)	01h, 31h, 11h	Not allowed	Not allowed	Not allowed
Write Status Registers (indirect)	71h	Not allowed	Not allowed	Not allowed
Status Register Lock	6Fh	Not allowed	Not allowed	Not allowed
Terminate	F0h	Allowed	Allowed	Allowed
Enable Reset	66h	Allowed	Allowed	Allowed
Reset Device	99h	Allowed	Allowed	Allowed
Read Mfg ID and Device ID	9Fh, 90h, 94h	Allowed	Allowed	Allowed
Deep Power-Down	B9h	Not allowed	Not allowed	Not allowed
Resume from Deep Power-Down	ABh	Allowed	Allowed	Allowed
Ultra Deep Power-Down	79h	Not allowed	Not allowed	Not allowed
Read SFDP	5Ah	Not allowed	Allowed	Allowed
Set Burst with Wrap	77h	Not allowed	Allowed	Allowed

1. The operation is allowed in a different 64 kB block.

7.11.4 Device Status

When the $\overline{CS}$ pin is deasserted, the program or erase operation currently in progress suspends within a time of t_{SUSE}. Hardware sets the Suspend (SUSP) bit in Status Register 2 and the ES or PS bits in Status Register 5 to indicate that the program or erase operation has been suspended. Also, hardware clears the $\overline{RDY}$/BSY bit in Status Register 1 to indicate that the device is ready for another operation.

© 2022 Renesas Electronics

7.11.5 Programming Restrictions

The Erase/Program Suspend command adheres to the following programming restrictions.

The following commands cannot be suspended:

- Write Status Register 1 (01h)
- Write Status Register 2 (31h)
- Write Status Register 3 (11h)
- Write Status Registers (71h)
- Status Register Lock (6Fh)
- Program OTP Security Registers (9Bh)
- Chip Erase (60h/C7h)
- Sequential Programming (AFh/ADh)

Hardware ignores the Program/Suspend command if it is issued while these commands are in progress.

Erase Suspend and Program Suspend Ordering

A program operation can be performed while an erase operation is suspended. However, that operation must be completed before the erase operation can be resumed. Also, an erase operation cannot be performed while a program operation is suspended. Other device operations, such as a Read Status Register, can also be performed while a program or erase operation is suspended.

Write Enable Latch Ignored

Since the need to suspend a program or erase operation is immediate, the Write Enable command does not need to be issued prior to the Program/Erase Suspend command being issued. Therefore, the Program/Erase Suspend command operates independently of the state of the WEL bit in the Status Register.

Deasserting the $\overline{CS}$ Pin

The complete command must be clocked into the device before the $\overline{CS}$ pin is deasserted. Also, the $\overline{CS}$ pin must be deasserted on a byte boundary (multiples of eight bits). Otherwise, no suspend operation is performed.

Accessing a Suspended Area

If a read operation is attempted to a suspended area (page for programming, or block for erasing), the device outputs undefined data.

Note: A read operation from a naturally aligned 256 kB area (referred to as a physical block) that contains a suspended area might provide unreliable data. For techniques to ensure high data integrity, see Application Note AN-500. A read operation from a naturally aligned 256 kB area (referred to as a physical block) that contains a suspended area might provide unreliable data. For techniques to ensure high data integrity, see Application Note AN-500.

© 2022 Renesas Electronics

7.12 Program/Erase Resume (7Ah/D0h)

The device supports two Program/Erase Resume commands, 7Ah and D0h, that perform the exact same function. The 7Ah command can be used for legacy software, and the D0h command is used for compatibility with future implementations.

The Program/Erase Resume command allows a suspended program or erase operation to be resumed and continue programming a Flash page or erasing a Flash memory block where it left off.

7.12.1 Command Prerequisites

Hardware accepts the Program/Erase Resume command only if the ES bit (set when an erase operation is suspended) or PS bit (set when a program operation is suspended) in Status Register 5 is set and the $\overline{\text{RDY}}$/BSY bit in Status Register 1 is cleared. If the ES/PS bit is cleared or the $\overline{\text{RDY}}$/BSY bit is set, the Program/Erase Resume command is ignored by the device. See Section 6.3, Status Register 1 and Section 6.7, Status Register 5.

Note that the Write Enable command does not need to be issued prior to the Program/Erase Resume command being issued. Therefore, the Program/Erase Resume command operates independently of the state of the WEL bit in Status Register 1.

7.12.2 Transfer Format

The 7Ah and D0h commands follow the 1-0-0 transfer format described in Section 5.2, where the command is transferred on the SI pin. No address or data are transferred for this command. See Figure 3 for a timing diagram of this operation.

7.12.3 Transfer Sequence

To perform the Program/Erase Resume operation, the $\overline{\text{CS}}$ pin is asserted and the information transferred as follows:

- The 7Ah or D0h command is clocked into the device. Eight clocks are required to transfer the command. The most significant bit of the command is transferred first. No address of data are required for this command.
- When the $\overline{\text{CS}}$ pin is deasserted, the device resumes the program.

See Table 20 for more information on the transfer sequence for this command.

7.12.4 Command Behavior

When the command is executed, hardware performs the following:

- Hardware clears either the PS or the ES bits in Status Register 5 depending on whether a program or erase operation has been suspended. If both of these bits are cleared, hardware clears the SUSP bit in Status Register 2.
- Hardware sets the $\overline{\text{RDY}}$/BSY bit in Status Register 1 to indicate that the device is busy.
- When the $\overline{\text{CS}}$ pin is deasserted, the program or erase operation currently suspended resumes within a time of t_{RES}.

7.12.5 Programming Restrictions

The Program/Erase Resume command adheres to the following programming restrictions.

- The complete command must be clocked into the device before the $\overline{\text{CS}}$ pin is deasserted.
- The $\overline{\text{CS}}$ pin must be deasserted on a byte boundary (multiples of eight bits). Otherwise, no resume operation is performed.
- While the device is busy resuming a program or erase operation, any attempts at issuing the Program/Erase Suspend command are ignored. Therefore, if a resumed program or erase operation needs to be subsequently suspended again, the system must either wait the entire t_{RES} time before issuing the Program/Erase Suspend command, or it can check the status of the $\overline{\text{RDY}}$/BSY bit in Status Register 1, or the ES/PS bits in Status Register 5 to determine if the previously suspended program or erase operation has resumed.

© 2022 Renesas Electronics

- During a simultaneous Erase Suspend/Program Suspend condition, issuing the Program/Erase Resume command results in the program operation resuming first. After the program operation has been completed, the Program/Erase Resume command must be issued again in order for the erase operation to be resumed. For more information, see Section 5.10.1, Nested Operations.

7.13 Set Burst Wrap (77h)

This command is used in conjunction with the EBh and E7h commands to support a cache line fill, regardless of the starting address. This type of operation, known as 'address wrapping', is an MCU-friendly feature that allows the Microcontroller Unit (MCU) cache controller to fill a cache line in one operation, starting from a specific address (known as the critical byte) within the cache line, proceeding to the end of the line, then wrapping around the start of the cache line to complete the fill.

For example, if the wrap size is 16 bytes and the starting address is 0x1004, then the read sequence is: 0x1004, 0x1005, 0x1006, 0x1007, 0x1008, 0x1009, 0x100A, 0x100B, 0x100C, 0x100D, 0x100E, 0x100F, 0x1000, 0x1001, 0x1002, 0x1003. As shown in this sequence, the fill starts at address 0x1004, proceeds to the end of the cache line (0x100F), then wraps around to 0x1000 to complete the fill.

The wrap feature can improve code execution performance in the MCU system, as the MCU first receives the command or data it requires at that instant, and then fetches the remainder of the cache line without requiring additional commands or addresses to be sent.

The 77h command is used to both enable/disable the wrap-around feature, and determine the size of the wrap. The 77h command sets the state of bits W6, W5, and W4 as shown in Table 25.

7.13.1 Transfer Format

The 77h command follows the 1-4-4 transfer format described in Section 5.6, where the command is transferred on the SI pin, and the address and data are transferred on the $\overline{\text{HOLD}}$, $\overline{\text{WP}}$, SO, and SI pins. See Figure 17 for a timing diagram of this command.

7.13.2 Transfer Sequence

To perform the Set Burst with Wrap operation, the $\overline{\text{CS}}$ pin is asserted and the information transferred as follows:

- The 77h command is clocked into the device. Eight clocks are required to transfer the command. The most significant bit of the command is transferred first.
- Three address bytes are clocked in. A total of 6 clocks are required to transfer the address. The most significant bit of the address (A[23]) is transferred first. Even though the address must be clocked in, the address is treated as a don't care field internally.
- Following transfer of the last address byte, eight Wrap bits are transferred which indicate the length of the wrap operation as described in the table below.

7.13.3 Wrap Bits

After the last address byte is transferred, the device transfers eight wrap bits (W7-0), which indicate the wrap length. Note that only wrap bits W6:W4 are used during this operation. The W7 and W3:W0 bits are not used. This is shown in the following table.

Table 25. Encoding of Burst Wrap Bits

W6	W5	W4 = 0		W4 = 1	
		Wrap Length	Wrap Around	Wrap Length	Wrap Around
0	0	8-byte	Yes	N/A	No
0	1	16-byte	Yes	N/A	No
1	0	32-byte	Yes	N/A	No
1	1	64-byte	Yes	N/A	No

Once the 77h command is executed and the W6:W4 bits are set, the subsequent EBh or E7h command uses these bits to determine what section size to access within a given page. As shown in the table, returning to the normal read operation requires the execution of another 77h command with the W4 bit driven high (W4 = 1).

© 2022 Renesas Electronics

7.13.4 Programming Restrictions

The Set Burst with Wrap command adheres to the following programming restrictions.

- The $\overline{CS}$ pin must be deasserted on a byte boundary (multiples of eight bits). Otherwise, the device aborts the operation and no action is taken.

7.14 Write Enable (06h)

The Write Enable command is used to set the Write Enable Latch (WEL) bit in Status Register 1. The WEL bit must be set for any of the following commands to be executed:

- Byte/Page Program (02h)
- Dual Output Byte/Page Program (A2h)
- Quad Output Byte/Page Program (32h)
- Sequential Program Mode (AFh/ADh)
- Any Erase command (20h, 52h, D8h, 60h/C7h)
- Program OTP Security Register (9Bh)
- Write Status Register (01h, 31h, 11h, 71h)

This makes the issuance of the above commands a two step process, thereby reducing the chances of a command being accidentally or erroneously executed. If the WEL bit in the Status Register is not set prior to the issuance of one of these commands, that command is not executed.

7.14.1 Transfer Format

The 06h command follows the 1-0-0 transfer format described in Section 5.2, where the command is transferred on the SI pin. No address or data are transferred for this command. See Figure 3 for a timing diagram of this operation.

7.14.2 Transfer Sequence

To perform the Write Enable operation, the $\overline{CS}$ pin is asserted and the information transferred as follows:

- The 06h command is clocked into the device. Eight clocks are required to transfer the command. The most significant bit of the command is transferred first. No address or data are required for this command.
- When the $\overline{CS}$ pin is deasserted, hardware sets the WEL bit in Status Register 1.

See Table 20 for more information on the transfer sequence for this command.

7.14.3 Programming Restrictions

The Write Enable command adheres to the following programming restrictions.

- The complete command must be clocked into the device before the $\overline{CS}$ pin is deasserted.
- The $\overline{CS}$ pin must be deasserted on a byte boundary (multiple of eight bits). Otherwise, the device aborts the operation and no action is taken.

© 2022 Renesas Electronics

7.15 Write Disable (04h)

The Write Disable command is used to clear the Write Enable Latch (WEL) bit in Status Register 1. When the WEL bit is cleared, the following commands cannot be executed:

- Byte/Page Program (02h)
- Dual Output Byte/Page Program (A2h)
- Quad Output Byte/Page Program (32h)
- Sequential Program Mode (AFh/ADh)
- Any Erase command (20h, 52h, D8h, 60h/C7h)
- Program OTP Security Register (9Bh)
- Write Status Register (01h, 31h, 11h, 71h)

Other conditions can also cause the WEL bit to be cleared. For more information, see Section 13, Status Register 1 Format.

7.15.1 Transfer Format

The 04h command follows the 1-0-0 transfer format described in Section 5.2, where the command is transferred on the SI pin. No address or data are transferred for this command. See Figure 3 for a timing diagram of this operation.

7.15.2 Transfer Sequence

To perform the Write Disable operation, the $\overline{CS}$ pin is asserted and the information transferred as follows:

- The 04h command is clocked into the device. Eight clocks are required to transfer the command. The most significant bit of the command is transferred first. No address or data are required for this command.
- When the $\overline{CS}$ pin is deasserted, hardware clears the WEL bit in Status Register 1.

See Table 20 for more information on the transfer sequence for this command.

7.15.3 Programming Restrictions

The Write Disable command adheres to the following programming restrictions.

- The complete command must be clocked into the device before the $\overline{CS}$ pin is deasserted.
- The $\overline{CS}$ pin must be deasserted on a byte boundary (multiple of eight bits). Otherwise, the device aborts the operation and no action is taken.

7.16 Volatile Status Register Write Enable (50h)

To write the volatile version of the Status Register bits, the Write Enable for Volatile Status Register (50h) command must be issued prior to each Write Status Register (01h) command. The Write Enable for the Volatile Status Register command does not set the Write Enable Latch (WEL) bit in Status Register 1. It is only valid for the next following Write Status Register command, to change the volatile Status Register bit values.

7.16.1 Transfer Format

The 50h command follows the 1-0-0 transfer format described in Section 5.2, where the command is transferred on the SI pin. No address or data are transferred for this command. See Figure 3 for a timing diagram of this operation.

7.16.2 Transfer Sequence

To perform the Write Disable operation, the $\overline{CS}$ pin is asserted and the information transferred as follows:

- The 50h command is clocked into the device. Eight clocks are required to transfer the command. The most significant bit of the command is transferred first. No address or data are required for this command.
- When the $\overline{CS}$ pin is deasserted, hardware performs the operation.

See Table 20 for more information on the transfer sequence for this command.

© 2022 Renesas Electronics

7.16.3 Programming Restrictions

The Volatile Status Register Write Enable command adheres to the following programming restrictions.

- The complete command must be clocked into the device before the $\overline{CS}$ pin is deasserted.
- The $\overline{CS}$ pin must be deasserted on a byte boundary (multiple of eight bits). Otherwise, the device aborts the operation and no action is taken.

7.17 Individual Block Lock (36h)

The Individual Block Lock command can be used to protect individual pages in the memory array from being programmed or erased via one of the Program or Erase commands. To enable the individual block lock function, the WPS bit in Status Register 3 must be set. If the WPS bit is cleared, write protection is then determined by the combination of the CMPRT, BPSIZE, TB, and BP[2:0] bits in the Status Register 1. The default value for each individual lock bit is 1 at power-up or reset, so the entire memory array is protected.

7.17.1 Command Prerequisites

The Write Enable (06h) command must be executed before the device can accept the Individual Block Lock command. This is required to set the WEL bit in Status Register 1.

7.17.2 Transfer Format

The 36h command follows the 1-1-0 transfer format described in Section 5.2, where the command and address are transferred on the SI pin. The address represents the individual block to be locked. Hence no data is transferred for this command.

7.17.3 Transfer Sequence

To perform the Individual Block Lock operation, the $\overline{CS}$ pin is asserted and the information transferred as follows:

- The 36h command is clocked into the device. Eight clocks are required to transfer the command. The most significant bit of the command is transferred first.
- Three address bytes are clocked in to specify the address location to be locked within the memory array. A total of 24 clocks are required to transfer the address. The most significant bit of the address (A[23]) is transferred first.
- When the $\overline{CS}$ pin is deasserted, hardware performs the operation and clears the WEL bit in Status Register 1.

See Table 20 for more information on the transfer sequence for this command.

7.17.4 Programming Restrictions

The Individual Block Lock command adheres to the following programming restrictions.

- The complete command must be clocked into the device before the $\overline{CS}$ pin is deasserted.
- The $\overline{CS}$ pin must be deasserted on a byte boundary (multiple of eight bits). Otherwise, the device aborts the operation and no action is taken.

© 2022 Renesas Electronics

7.18 Individual Block Unlock (39h)

The Individual Block Unlock command can be used to unlock individual pages in the memory array to allow them to be programmed or erased via one of the Program or Erase commands. To enable the individual block unlock function, the WPS bit in Status Register 3 must be set. If WPS is cleared, write protection is then determined by the combination of the CMP, SEC, TB, and BP[2:0] bits in Status Register 1. The default value for each individual lock bit is 1 at power-up or reset, so the entire memory array is being protected.

7.18.1 Command Prerequisites

The Write Enable (06h) command must be executed before the device can accept the Individual Block Unlock command. This is required to set the WEL bit in Status Register 1.

7.18.2 Transfer Format

The 39h command follows the 1-1-0 transfer format described in Section 5.2, where the command and address are transferred on the SI pin. The address represents the individual block to be unlocked. Hence no data is transferred for this command. See Figure 4, SPI Transfer — Command and Address Only for a timing diagram of this transaction.

7.18.3 Transfer Sequence

To perform the individual block unlock operation, the $\overline{CS}$ pin is asserted and the information transferred as follows:

- The 39h command is clocked into the device. Eight clocks are required to transfer the command. The most significant bit of the command is transferred first.
- Three address bytes are clocked in to specify the address location to be unlocked within the memory array. A total of 24 clocks are required to transfer the address. The most significant bit of the address (A[23]) is transferred first.
- When the $\overline{CS}$ pin is deasserted, hardware performs the operation and clears the WEL bit in Status Register 1.

See Table 20 for more information on the transfer sequence for this command.

7.18.4 Programming Restrictions

The Individual Block Unlock command adheres to the following programming restrictions.

- The complete command must be clocked into the device before the $\overline{CS}$ pin is deasserted.
- The $\overline{CS}$ pin must be deasserted on a byte boundary (multiple of eight bits). Otherwise, the device aborts the operation and no action is taken.

© 2022 Renesas Electronics

7.19 Read Block Lock (3Ch/3Dh)

The Read Block Lock commands allow the user to read the status of the lock bits in each block. The individual block locks are used to protect any individual block. The default value for all individual block lock bits is 1 upon device power on or after reset.

The 3Ch and 3Dh commands perform the exact same operation. These two commands are identical and are provided for backward compatibility purposes.

7.19.1 Command Prerequisites

The WPS bit in Status Register 3 must be set. When WPS is set, software uses the Block Lock (36h) and Block Unlock (39h) commands to lock and unlock blocks of memory. If the WPS bit is cleared, write protection is determined by the combination of CMP, SEC, TB, BP[2:0] bits in the Status Registers. The Read Block Lock command must not be used to determine the protection status of any region of the memory. See Section 5.8.1 for more information on the protection scheme.

7.19.2 Transfer Format

The 3Ch and 3Dh commands follow the 1-1-1 transfer format described in Section 5.2, where the command and address are transferred on the SI pin, and data is transferred on the SO pin. Figure 7, SPI Transfer — Command, Address, and Data — Read Operation with No Dummy Bytes shows a timing diagram for this transaction.

7.19.3 Transfer Sequence

To perform the Read Block Lock operation, the $\overline{CS}$ pin is asserted and the information transferred as follows:

- The 3Dh command is clocked into the device. Eight clocks are required to transfer the command. The most significant bit of the command is transferred first.
- Three address bytes are clocked in to specify the starting address location of the first byte to read within the buffer. A total of 24 clocks are required to transfer the address. The most significant bit of the address (A[23]) is transferred first.
- Data is output on the SO pin and requires eight clock cycles. The MSB of the lock value is driven onto the SO pin first, and the LSB is driven out last. If the LSB is 1, the corresponding block is locked and no erase or program operation can be executed to that block. If the LSB is 0, the block is unlocked, indicating that program/erase operations are allowed. The remaining bits 7:1 of this value are undefined.

  If $\overline{CS}$ is kept low and additional data is clocked out, the device simply repeats the same byte over and over again until $\overline{CS}$ goes high. Out of the 8 bits in this byte, the LSB (bit 0) has the lock bit information, the rest of the are undefined. The lock bit information corresponds to the region of memory that encapsulates the 20-bit address provided by the user. So for example:
  - If the user provides an address of 0x000000, the device returns the lock status of the 4 kB region from 0x000000 - 0x000FFF.
  - If the user provides an address of 0x001234, the device returns the lock status of the 4 kB region 0x001000 - 0x001FFF.

7.19.4 Programming Restrictions

The Read Block Lock command adheres to the following programming restrictions.

- The complete command must be clocked into the device before the $\overline{CS}$ pin is deasserted.

© 2022 Renesas Electronics

7.20 Global Block Lock (7Eh)

The Global Block Lock command is used to set all of the block bits to 1 with one operation.

7.20.1 Command Prerequisites

The Write Enable command (06h) must be executed to set WEL bit in Status Register 1 before the Global Block Lock command can be executed. See Section 7.14, Write Enable (06h) for more information.

7.20.2 Transfer Format

The 7Eh command follows the 1-0-0 transfer format described in Section 5.2, where the command is transferred on the SI pin. No address or data are transferred for this command. See Figure 3 for a timing diagram of this operation.

7.20.3 Transfer Sequence

To perform the Global Block Lock operation, the $\overline{CS}$ pin is asserted and the information transferred as follows:

- The 7Eh command is clocked into the device. Eight clocks are required to transfer the command. The most significant bit of the command is transferred first. No address or data are required for this command.
- When the $\overline{CS}$ pin is deasserted, hardware performs the operation and clears the WEL bit in Status Register 1.

See Table 20 for more information on the transfer sequence for this command.

7.20.4 Programming Restrictions

The Global Block Lock command adheres to the following programming restrictions.

- The complete command must be clocked into the device before the $\overline{CS}$ pin is deasserted.
- The $\overline{CS}$ pin must be deasserted on a byte boundary (multiple of eight bits). Otherwise, the device aborts the operation and no action is taken.

© 2022 Renesas Electronics

7.21 Global Block Unlock (98h)

The Global Block UnLock command is used to reset all of the block bits to 0 with one operation.

7.21.1 Command Prerequisites

The Write Enable command (06h) must be executed to set WEL bit in Status Register 1 before the Global Block Unlock command can be executed. See Section 7.14, Write Enable (06h) for more information.

7.21.2 Transfer Format

The 98h command follows the 1-0-0 transfer format described in Section 5.2, where the command is transferred on the SI pin. No address or data are transferred for this command. See Figure 3 for a timing diagram of this operation.

7.21.3 Transfer Sequence

To perform the Global Block Unlock operation, the $\overline{CS}$ pin is asserted and the information transferred as follows:

- The 98h command is clocked into the device. Eight clocks are required to transfer the command. The most significant bit of the command is transferred first. Since all blocks are unlocked with this command, no address or data are required.
- When the $\overline{CS}$ pin is deasserted, hardware performs the operation and clears the WEL bit in Status Register 1.

See Table 20 for more information on the transfer sequence for this command

7.21.4 Programming Restrictions

The Global Block Unlock command adheres to the following programming restrictions.

- The complete command must be clocked into the device before the $\overline{CS}$ pin is deasserted.
- The $\overline{CS}$ pin must be deasserted on a byte boundary (multiple of eight bits). Otherwise, the device aborts the operation and no action is taken.

© 2022 Renesas Electronics

7.22 Program Security Register (9Bh)

There are four specialized 128-byte OTP (One-Time Programmable) Security Registers that can be used for purposes such as unique device serialization and locked key storage.

7.22.1 Command Prerequisites

Before the Program OTP Security Register command can be issued, the Write Enable command (06h) must be executed to set WEL bit in Status Register 1. See Section 7.14, Write Enable (06h) for more information.

7.22.2 OTP Security Register Layout

The OTP Security Registers are independent of the main Flash memory array. The four registers are organized as follows:

Table 26. OTP Security Register 0 Bit Assignments

Security Register Byte Number						
127	126	125	.....	2	1	0
Factory Programmed by Renesas Electronics						

Table 27. OTP Security Register 1 Bit Assignments

Security Register Byte Number						
255	254	253	.....	130	129	128
User Security OTP Register						

Table 28. OTP Security Register 2 Bit Assignments

Security Register Byte Number						
383	382	381	.....	258	257	256
User Security OTP Register						

Table 29. OTP Security Register 3 Bit Assignments

Security Register Byte Number						
511	510	509	.....	386	385	384
User Security OTP Register						

7.22.3 Transfer Format

The 9Bh command follows the 1-1-1 transfer format described in Section 5.2, where the command and address are transferred on the SI pin, and data is transferred on the SO pin. See Figure 9 for timing diagram of this transfer.

7.22.4 Transfer Sequence

To perform the Program OTP Register operation, the $\overline{CS}$ pin is asserted and the information transferred as follows:

- The 9Bh command is clocked into the device. Eight clocks are required to transfer the command. The most significant bit of the command is transferred first.
- Three address bytes are clocked in to specify the starting address location of the first byte to read within the memory array. A total of 24 clocks are required to transfer the address. The most significant bit of the address

© 2022 Renesas Electronics

(A[23]) is transferred first. For this command, address bits 23:9 are don't care. Only bits 8:0 are used to address the appropriate Security register. See Table 30 for an encoding of the address.

- Data is input on the SI pin. Each byte transfer requires eight clock cycles. The data is always input with the most significant bit of the byte transferred first. The number of bytes transferred is determined by software. The transfer can be anywhere from a single byte to the entire OTP register array. Additional data bytes are transferred every eight clocks as long as the $\overline{CS}$ pin is asserted. The programming of the data bytes is internally self-timed and takes place in a time of t_{OTPP} if the entire 128-byte register is programmed at once.
- When the $\overline{CS}$ pin is deasserted, the device takes the data stored in the internal buffer and programs it into the appropriate OTP Security Register locations based on the starting address specified by A8-A0 and the number of data bytes sent to the device.

Note that the Program OTP Security Register command utilizes an internal 256-buffer for processing. Therefore, the contents of the buffer is altered from its previous state when this command is issued.

See Table 20 for more information on the transfer sequence for this command.

7.22.5 Addressing the OTP Security Registers

Each byte within the four OTP security registers can be accessed using bits 8:0 of the address. Bits 23:9 of the address are ignored. The lower 7 bits (6:0) are used to select a byte within a given 128-byte OTP register. The next two bits (8:7) are used to select one of the four OTP registers. This is shown in Table 30.

Table 30. OTP Security Register Addressing

Address									
23:9	A8	A7	A6	A5	A4	A3	A2	A1	A0
Don't care	0	0	OTP Security Register 0 (Factory Programmed by Renesas Electronics) A[6:0] = 0000000 - byte 0, A[6:0] = 1111111 - byte 127						
Don't care	0	1	User defined OTP Security Register 1 A[6:0] = 0000000 - byte 128, A[6:0] = 1111111 - byte 255						
Don't care	1	0	User defined OTP Security Register 2 A[6:0] = 0000000 - byte 256, A[6:0] = 1111111 - byte 383						
Don't care	1	1	User defined OTP Security Register 3 A[6:0] = 0000000 - byte 384, A[6:0] = 1111111 - byte 511						

7.22.6 Programming Status

While the device is programming the OTP Security Register, the $\overline{RDY}$/BSY bit in Status Register 1 can be read to determine if the operation is still in progress. For faster throughput, it is recommended that the Status Register be polled rather than waiting the t_{OTPP} time to determine if the data bytes have finished programming. At some point before the OTP Security Register programming completes, hardware clears the WEL bit in the Status Register.

7.22.7 Locking OTP Registers 1 - 3

The tables above show the bytes associated with each OTP register. OTP register 0 is locked by default as the value is programmed by Renesas Electronics at the factory and cannot be changed. For OTP registers 1 - 3, the most significant byte is as follows:

- OTP Register 1: MSB = byte 255
- OTP Register 2: MSB = byte 383
- OTP Register 3: MSB = byte 511

For OTP registers 1 - 3, bit-level programming is allowed for the first 127 bytes of the registers. However, the register is locked whenever one or more bits of the most significant byte are programmed. For example, if any bit of byte 255 in OTP register 1 is programmed, that register is locked by hardware can cannot be programmed further.

7.22.8 Verifying the Locked Status of a Security Register

As described in the previous subsection, once any bit in the MSB of Security registers 1 - 3 is written, the register is locked and not further programming is allowed. Software can determine the Locked status of each register by

© 2022 Renesas Electronics

reading bits 5:3 (SL3:SL1) of Status Register 2. Each bit corresponds to one of the user defined OTP security registers. If the corresponding bit is cleared, the register is not locked. If the corresponding bit is set, the register is locked and cannot be programmed. See Section 6.4, Status Register 2 for more information.

7.22.9 Programming Restrictions

The Program OTP Register command adheres to the following program restrictions.

Early Power-Down

If the device is powered-down during the OTP Security Register program cycle, then the contents of the 128-byte user programmable portion of the OTP Security Register cannot be guaranteed and may not be programmed again.

Deasserting the $\overline{CS}$ Pin

The $\overline{CS}$ pin must be deasserted on a byte boundary (multiples of eight bits). Otherwise, the device aborts the operation and the user-programmable portion of the OTP Security Register is not programmed.

Incomplete Address or Data

The WEL bit in the Status Register is cleared if the OTP Security Register program cycle aborts due to an incomplete address being sent or an incomplete byte of data being sent.

Register Previously Programmed

Prior to programming an OTP register, hardware checks the state of the SL3:1 field in Status Register 2. For example, if an attempt is made to program OTP register 1, and the register was previously programmed as indicated by the SL1 bit in Status Register 2 being set, the operation is aborted.

7.23 Read OTP Security Register (4Bh)

The Read OTP Security Register command accesses the four specialized OTP security registers. Any portion of the value can be read out depending on when the $\overline{CS}$ pin is deasserted.

7.23.1 Transfer Format

The 4Bh command follows the 1-1-1 transfer format described in Section 5.2, where the command and address are transferred on the SI pin, and data is transferred on the SO pin. See Figure 7 for a timing diagram of this transaction. In this diagram a single byte of data is shown.

7.23.2 Transfer Sequence — Single Register

To perform the Read OTP Security register operation of a single register, the $\overline{CS}$ pin is asserted and the information transferred as follows:

- The 4Bh command is clocked into the device. Eight clocks are required to transfer the command. The most significant bit of the command is transferred first.
- Three address bytes are clocked in to specify the starting address location of the first byte to read within the memory array. A total of 24 clocks are required to transfer the address. The most significant bit of the address (A[23]) is transferred first. The address breakdown is as follows:
- A[23:9] are don't care
- A[8:0] indicate the byte address
- Following the three address bytes, an additional dummy byte must be clocked into the device.
- Data is output on the SO pin. Each byte transfer requires eight clock cycles. The data is always output with the most significant bit of the byte transferred first. The number of bytes transferred depends on how long the $\overline{CS}$ pin remains asserted. A total of 1024 clocks are required to shift out all 128 bytes of data.

7.23.3 Transfer Sequence — All Registers

To perform the Read OTP Security register operation of all four register, the transfer sequence is the same as above, except that the $\overline{CS}$ pin remains asserted until all registers are read. As noted above, a total of 1024 clocks are required to read one register. Therefore, a total of 4096 clocks are required to read out the contents of all four registers.

See Table 20 for more information on the transfer sequence for this command.

© 2022 Renesas Electronics

7.24 Read Status Registers 1 - 3 (05h, 35h, 15h)

Three Read Status Register commands are used to perform a direct read of Status Registers 1 - 3. These registers can also be indirectly accessed using the 65h command as described in the following section. In the direct method, a specific command is executed. Hardware decodes this command and retrieves data from the appropriate Status Register. No address field is required. Status Registers 1 - 3 are accessed by the following commands.

- Read Status Register 1: 05h
- Read Status Register 2: 35h
- Read Status Register 3: 15h

7.24.1 Transfer Format

The 05h/35h/15h commands follow the 1-0-1 transfer format described in Section 5.2, where the command is transferred on the SI pin, and data is transferred on the SO pin. No address is required for this command. See Figure 5 for a timing diagram of this transaction.

7.24.2 Transfer Sequence

To perform the Read Status Register register operation, the $\overline{CS}$ pin is asserted and the information transferred as follows:

- The 05h/35h/15h command is clocked into the device. Eight clocks are required to transfer the command. The most significant bit of the command is transferred first.
- Data is output on the SO pin. Each byte transfer requires eight clock cycles. The data is always output with the most significant bit of the byte transferred first. After the last bit (0) of the Status Register has been clocked out, the sequence repeats itself, starting again with bit 7 of the selected register byte. This continues as long as the $\overline{CS}$ pin remains asserted and the clock pin is being pulsed. The data in the Status Register is constantly being updated, so each repeating sequence may output new data.
- Deasserting the $\overline{CS}$ pin terminates the Read Status Register operation and put the SO pin into a high-impedance state. The $\overline{CS}$ pin can be deasserted at any time and does not require that a full byte of data be read.

See Table 20 for more information on the transfer sequence for this command.

© 2022 Renesas Electronics

7.25 Read Status Registers (65h)

The Read Status Register command works in conjunction with an 8-bit address field to perform an indirect read of Status Registers 1 - 5. Registers 1 - 3 can also be directly accessed as described in the previous section. In the indirect method, a Read Status Register command (65h) is executed. Hardware decodes this command and retrieves data from the appropriate Status Register as directed by the 8-bit address field, which follows the command in the sequence. Status Registers 1 - 5 are read in the following manner.

Table 31. Indirect Addressing of the Status Registers

Byte 0	Byte 1	Byte 2	Byte 3	Action
Command	Address	Dummy	Output	
65h	01h	Dummy	S[7:0]	Read Status Register 1
65h	02h	Dummy	S[15:8]	Read Status Register 2
65h	03h	Dummy	S[23:16]	Read Status Register 3
65h	04h	Dummy	S[31:24]	Read Status Register 4
65h	05h	Dummy	S[39:32]	Read Status Register 5

7.25.1 Transfer Format

The 65h command follows the 1-1-1 transfer format described in Section 5.2, where the command and address are transferred on the SI pin, and data is transferred on the SO pin. Figure 24 shows a timing diagram for this operation.

7.25.2 Transfer Sequence

To perform the Read Status Register operation, the $\overline{CS}$ pin is asserted and the information transferred as follows:

- The 65h command is clocked into the device. Eight clocks are required to transfer the command. The most significant bit of the command is transferred first.
- One address byte is clocked in to specify the address the register to be written. A total of 8 clocks are required to transfer the address. The most significant bit of the address (A[7]) is transferred first.
- Following the one address byte, one dummy byte is clocked into the device.
- Data is output on the SO pin. Each byte transfer requires eight clock cycles. The data is always output with the most significant bit of the byte transferred first. The number of bytes transferred is determined by software. The transfer can be anywhere from a single register to all five registers.
- Deasserting the $\overline{CS}$ pin terminates the read operation and puts the SO pin into high-impedance state. The $\overline{CS}$ pin can be deasserted at any time and does not require a full byte of data be read.

See Table 20 for more information on the transfer sequence for this command.

7.25.3 Reading a Single Status Register

To read a specific Status Register, the $\overline{CS}$ pin must first be asserted and the corresponding command of 65h must be clocked into the device. After the command has been clocked in, the 8-bit address of the register to be read is clocked into the device as shown in the above table. Once the address is decoded, hardware begins outputting Status Register data on the SO pin during every subsequent clock cycle.

© 2022 Renesas Electronics

7.25.4 Continuous Read of All Status Registers

To read all five Status Registers in sequence, execute a 65h command with the address field equivalent to 01h. Once the contents of Status Register 1 are read out, the hardware increments the address automatically and begins reading the contents of Status Register 2. This continues until all five Status Registers have been read out as long as the $\overline{CS}$ pin remains asserted and the clock pin is being pulsed. Once the process is started, data is input and output from the device as follows:

Table 32. Indirect Status Register Read Sequence

Clocks	Action
0 - 7	Command 65h. Clocks 0 - 3 = 0110, and clocks 4 - 7 = 0101.
8 - 15	Address 01h. Clocks 8 - 11 = 0000, and clocks 12 - 15 = 0001.
16 - 23	Dummy byte on clocks 16 - 23.
24 - 31	Status Register 1 data. Clock 24 = bit 7, and clock 31 = bit 0.
32 - 39	Status Register 2 data. Clock 32 = bit 7, and clock 39 = bit 0.
40 - 47	Status Register 3 data. Clock 40 = bit 7, and clock 47 = bit 0.
48 - 55	Status Register 4 data. Clock 48 = bit 7, and clock 55 = bit 0.
56 - 63	Status Register 5 data. Clock 56 = bit 7, and clock 63 = bit 0.
64 - xx	Data is undefined.

7.25.5 Transfer Diagram

Figure 24 shows the bus signals during an indirect register read operation. This type of command requires only a single 8-bit address as shown.

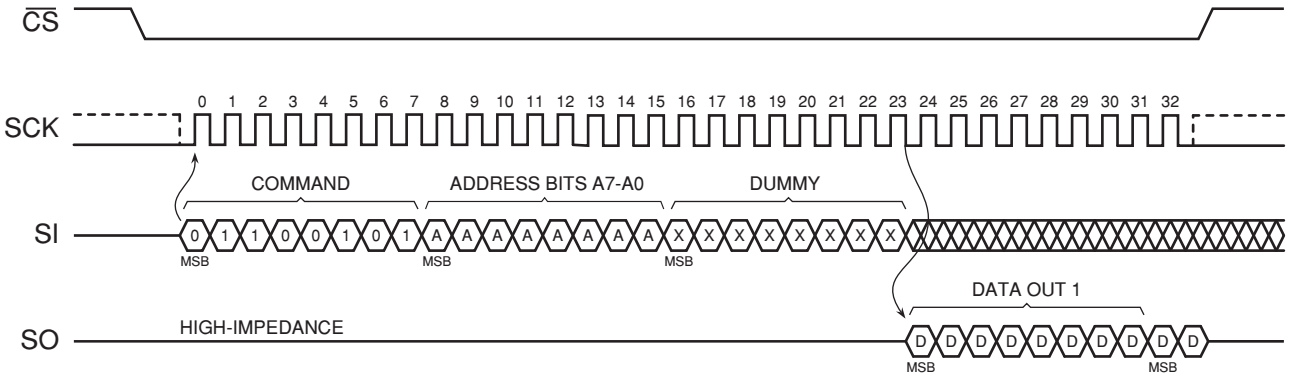

Figure 24. Status Register Read Operation Showing 8-bit Address Field

7.25.6 Programming Restrictions

The Read Status Register command adheres to the following programming restrictions.

Reading Register Addresses 7 Through 255

As the address is an 8-bit value, the device continues to read up to 255 register bytes as long as the $\overline{CS}$ pin remains asserted, even though only five registers are implemented at this time. Starting with a read of register 6 through register 255, the device returns undefined data. If the $\overline{CS}$ pin remains asserted and all 255 bytes are read out, the address wraps around from FFh to 00h. This continues until the $\overline{CS}$ pin is deasserted.

© 2022 Renesas Electronics

7.26 Write Status Registers 1 - 3 — Direct (01h, 31h, 11h)

The Write Status Register commands are used to perform a direct write of Status Registers 1 - 3. These registers can also be indirectly accessed as described in the following section. In the direct method, a specific command is executed. Hardware decodes this command and writes the data to the appropriate Status Register. No address field is required. Status Registers 1 - 3 are accessed by the following commands.

- Write Status Register 1: 01h
- Write Status Register 2: 31h
- Write Status Register 3: 11h

7.26.1 Command Prerequisites

To write the volatile version of the Status Register bits, the Write Enable for Volatile Status Register (50h) command must be issued prior to each Write Status Register (01h/31h/11h) command. The Write Enable for the Volatile Status Register command does not set the Write Enable Latch (WEL) bit in Status Register 1. It is only valid for the next following Write Status Register command, to change the volatile Status Register bit values.

To write the non-volatile version of the Status Register bits, the Write Enable (06h) command must be issued prior to each Write Status Register (01h/31h/11h) command.

7.26.2 Transfer Format

The 01h/31h/11h commands follow the 1-0-1 transfer format described in Section 5.2, where the command and data are transferred on the SI pin. No address is required for this command. See Figure 6 for a timing diagram of this transaction.

7.26.3 Transfer Sequence

To perform the Write Status Register register operation, the $\overline{CS}$ pin is asserted and the information transferred as follows:

- The 01h/31h/11h command is clocked into the device. Eight clocks are required to transfer the command. The most significant bit of the command is transferred first.
- Data is input on the SI pin. Each byte transfer requires eight clock cycles. The data is always input with the most significant bit of the byte transferred first.
- When the $\overline{CS}$ pin is deasserted, hardware clears the WEL bit in Status Register 1.

See Table 20 for more information on the transfer sequence for this command.

7.26.4 Programming Restrictions

The Write Status Register command adheres to the following programming restrictions.

- The complete command must be clocked into the device before the $\overline{CS}$ pin is deasserted.
- The $\overline{CS}$ pin must be deasserted on a byte boundary (multiple of eight bits). Otherwise, the device aborts the operation and no action is taken.
- For compatibility with legacy devices, command 01h can also be used with 2 bytes of data. In such case, the second byte is written to Status Register 2.
- To ensure that only Status Register 1 is written, command 01h must be used with one data byte only.

© 2022 Renesas Electronics

7.27 Write Status Registers — Indirect (71h)

The Write Status Register command works in conjunction with an 8-bit address field to perform an indirect write of Status Registers 1 - 5. Registers 1 - 3 can also be directly accessed as described in the previous section. In the indirect method, a Write Status Register command (71h) is executed. Hardware decodes this command and writes data to the appropriate Status Register using the 8-bit address field, which follows the command in the sequence. Status Registers 1 - 5 are written in the following manner.

Table 33. Indirect Addressing of the Status Registers

Byte 0	Byte 1	Byte 2	Action
Command	Address	Write Data	
71h	01h	S[7:0]	Write Status Register 1
71h	02h	S[15:8]	Write Status Register 2
71h	03h	S[23:16]	Write Status Register 3
71h	04h	S[31:24]	Write Status Register 4
71h	05h	S[39:32]	Write Status Register 5

7.27.1 Command Prerequisites

The Write Enable command (06h) must be executed to set WEL bit in Status Register 1 before the Write Status Register (71h) command can be executed. See Section 7.14, Write Enable (06h) for more information.

To write the volatile version of the Status Register bits, the Write Enable for Volatile Status Register (50h) Command must be issued prior to each Write Status Register (71h) command. The Write Enable for the Volatile Status Register command does not set the Write Enable Latch (WEL) bit in Status Register 1. It is only valid for the next following Write Status Register command, to change the volatile Status Register bit values.

To write the non-volatile version of the Status Register bits, the Write Enable (06h) command must be issued prior to each Write Status Register (01h/31h/11h) command.

7.27.2 Transfer Format

The 71h command follows the 1-1-1 transfer format described in Section 5.2, where the command, address, and data are transferred on the SI pin. Figure 25 shows a timing diagram for this operation.

7.27.3 Transfer Sequence

To perform the Write Status Register operation, the $\overline{CS}$ pin is asserted and the information transferred as follows:

- The 71h command is clocked into the device. Eight clocks are required to transfer the command. The most significant bit of the command is transferred first.
- One address byte is clocked in to specify the address of the register to be written. A total of 8 clocks are required to transfer the address. The most significant bit of the address (A[7]) is transferred first.
- Data is input on the SI pin. Each byte transfer requires eight clock cycles. The data is always input with the most significant bit of the byte transferred first. If more than one byte of data is provided before the $\overline{CS}$ pin is deasserted, no register is written.

See Table 20 for more information on the transfer sequence for this command.

© 2022 Renesas Electronics

7.27.4 Writing to a Status Register

To write a specific Status Register, the $\overline{CS}$ pin must first be asserted and the corresponding command of 71h must be clocked into the device. After the command has been clocked in, the 8-bit address of the register to be written is clocked into the device as shown in the above table. Once the address is decoded, hardware begins writing to the Status Register with the data on the SI pin. This sequence in Table 34 shows a write to Status Register 1.

Table 34. Indirect Status Register Write Sequence

Clocks	Action
0 - 7	Command 71h. Clocks 0 - 3 = 0111, and clocks 4 - 7 = 0001.
8 - 15	Address 01h. Clocks 8 - 11 = 0000, and clocks 12 - 15 = 0001.
16 - 23	Status Register 1 write data. Clock 16 = bit 7, and clock 23 = bit 0.

7.27.5 Transfer Diagram

Figure 25 shows the bus signals during an indirect register write operation. This type of command requires only a single 8-bit address.

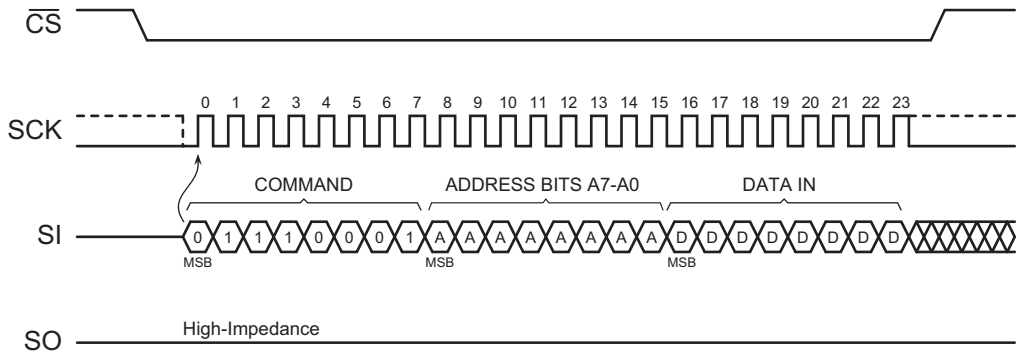

Figure 25. Status Register Write Operation Showing 8-bit Address Field

7.27.6 Programming Restrictions

The Write Status Registers command adheres to the following programming restrictions.

- The complete command must be clocked into the device before the $\overline{CS}$ pin is deasserted.
- The $\overline{CS}$ pin must be deasserted on a byte boundary (multiple of eight bits). Otherwise, the device aborts the operation and no action is taken.
- The AT25FF081A device implements Status Registers 1 - 5 at addresses 0x01 through 0x05. If the user attempts to write to a register that is not defined or reserved (addresses 0x00, or 0x06 - 0xFF), then the device does not write to any Status Register byte. Instead the operation is aborted and hardware clears the WEL bit in Status Register 1 once the $\overline{CS}$ pin is deasserted.

© 2022 Renesas Electronics

7.28 Status Register Lock (6Fh)

The Status Register Lock command is used to explicitly lock the Status Registers when the SRP1 and SRP0 bits in Status Registers 2 and 1 are set. Once this occurs, they can no longer be programmed. This command is provided to eliminate the possibility of inadvertently locking the registers by accidentally setting the SRP1 and SRP0 bits in Status Registers 2 and 1. Even if these two bits are set to 2'b11, this command, along with two verification bytes, is required in order for hardware to lock the Status Registers.

7.28.1 Command Prerequisites

The Write Enable command (06h) must be executed to set the WEL bit in Status Register 1 before the Status Register Lock command can be executed. See Section 7.14, Write Enable (06h) for more information.

7.28.2 Transfer Format

The 6Fh command follows a special 1-0-1 transfer format described in Section 5.2, where the command, address, and data are transferred on the SI pin. However, for this command, two verification bytes are transferred. Figure 26 shows a timing diagram for this operation.

7.28.3 Transfer Sequence

To perform the Status Register Lock operation, the $\overline{CS}$ pin is asserted and the information transferred as follows:

- The 6Fh command is clocked into the device. Eight clocks are required to transfer the command. The most significant bit of the command is transferred first.
- Data is input on the SI pin. The first verification byte of 4Dh is transferred, followed by a second verification byte of 67h. Each byte transfer requires eight clock cycles. The data is always input with the most significant bit of the byte transferred first. Note that these values must be transferred in the correct order. If a value other than 4Dh followed by 67h is transferred, the operation is aborted.

See Table 20 for more information on the transfer sequence for this command.

7.28.4 Transfer Diagram

Figure 26 shows the bus signals during a Status Register Lock operation. In this transfer the command is followed by two verification bytes.

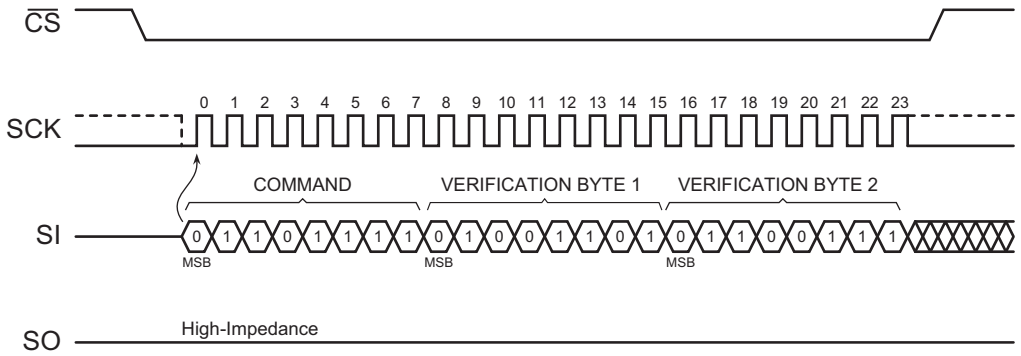

Figure 26. Status Register Lock Operation with Two Verification Bytes

7.28.5 Programming Restrictions

The Write Status Registers command adheres to the following programming restrictions.

- The complete command must be clocked into the device before the $\overline{CS}$ pin is deasserted.
- The $\overline{CS}$ pin must be deasserted on a byte boundary (multiple of eight bits). Otherwise, the device aborts the operation and no action is taken.

© 2022 Renesas Electronics

7.29 Deep Power-Down (B9h)

The *Deep Power-Down* command is used in conjunction with bit 7 (PDM) in Status Register 4 to place the device into Deep Power-Down mode. When the PDM bit is set and the B9h command is executed, the device enters Deep Power-Down mode.

When the device is in Deep Power-Down mode, most commands, including the Read Status Register command, are ignored. The only commands that are accepted while in this mode are the Resume from Deep Power-Down command (ABh), the Enable Reset command (66h), and the Reset Device (99h) commands. Since all other commands are ignored, the mode can be used as an extra protection mechanism against program and erase operations. When the $\overline{CS}$ pin is deasserted, the device enters the Deep Power-Down mode within the maximum time of t_{EDPD}.

7.29.1 Transfer Format

The B9h command follows the 1-0-0 transfer format described in Section 5.2, where the command is transferred on the SI pin. No address or data are transferred for this command. See Figure 3 for a timing diagram of this operation.

7.29.2 Transfer Sequence

To perform the Deep Power-Down operation, the $\overline{CS}$ pin is asserted and the information transferred as follows:

- The B9h command is clocked into the device. Eight clocks are required to transfer the command. The most significant bit of the command is transferred first.
- When the $\overline{CS}$ pin is deasserted, the device begins the power-down operation.

See Table 20 for more information on the transfer sequence for this command.

7.29.3 Programming Restrictions

The Deep Power-Down command adheres to the following programming restrictions.

- The $\overline{CS}$ pin must be deasserted on a byte boundary (multiple of eight bits). Otherwise, the device aborts the operation.
- The B9h command is ignored if an internally self-timed operation such as a program or erase cycle is in progress. In this case, the B9h command must be reissued after the internally self-timed operation has been completed. Software can monitor the $\overline{RDY}$/BSY bit in Status Register 1 to determine when the program or erase operation has completed.

© 2022 Renesas Electronics

7.30 Resume from Ultra-Deep Power-Down / Deep Power-Down with Device ID (ABh)

In order to exit the Deep Power-Down (DPD) mode and resume normal device operation, the Resume from Deep Power-Down (ABh) command must be issued. This command, along with the 66h/99h Reset Enable/Reset command, are the only commands that the device recognizes while in the Deep Power-Down mode. This command allows both the exit from DPD mode, as well as a fetch of the Device ID. Which operation is executed depends on the way in which $\overline{CS}$ is used as described below.

The ABh command can also be used to exit from Ultra-Deep Power-Down (UDPD) mode. Execution of this command while in Ultra-Deep Power-Down causes the device to initialize, and then enters standby mode, where it is ready to accept commands.

7.30.1 Command Options

As mentioned above, the ABh command can be used to exit both DPD and UDPD modes. In DPD mode, execution of the ABh command causes the device to exit the DPD state, and also fetch the device ID as described in Section 7.30.3 below. In UDPD mode, the ABh command is used to exit the UDPD state as described in Section 7.30.4 below. Table 35 shows how to exit the DPD and UDPD modes.

Table 35. Options for Exiting DPD and UDPD Modes

Command	Currently in DPD Mode?	Currently in UDPD Mode?	Exit DPD Mode	Exit UDPD Mode	Fetch Device ID
ABh	No	No	No	No	Yes
	Yes	No	Yes	No	Yes
	No	Yes	No	Yes	No

7.30.2 Transfer Format — Resume from Deep Power-Down

For this operation, the ABh command follows the 1-0-0 transfer format described in Section 5.2, where the command is transferred on the SI pin. No address or data are transferred for this command. See Figure 3 for a timing diagram of this operation.

7.30.3 Transfer Format — Resume from Deep Power-Down and Obtain Device ID

For this operation, the ABh command follows the 1-1-1 transfer format described in Section 5.2, where the command is transferred on the SI pin and address and data on the SO pin. See Figure 7 for a timing diagram of this operation. Note that no address is transferred for this command. Rather, three dummy bytes are transferred in place of the address.

7.30.4 Transfer Sequence — Resume from Deep Power-Down

To perform the Resume from Deep Power-Down operation, the $\overline{CS}$ pin is asserted and the information transferred as follows:

- The ABh command is clocked into the device. Eight clocks are required to transfer the command. The most significant bit of the command is transferred first.
- For this operation, the $\overline{CS}$ pin must be deasserted on the 8th clock, immediately after the command is issued. This causes the device begins the resume from power-down operation. When the $\overline{CS}$ pin is deasserted after the 8th clock, the device exits the Deep Power-Down mode within the maximum time of t_{RDPD} and returns to the standby mode. After the device has returned to the standby mode, normal command operations such as Read Array can be resumed.

See Table 20 for more information on the transfer sequence for this command.

© 2022 Renesas Electronics

7.30.5 Transfer Sequence — Resume from Deep Power-Down and Obtain Device ID

To perform the Resume from Deep Power-Down operation, the $\overline{CS}$ pin is asserted and the information transferred as follows:

- The ABh command is clocked into the device. Eight clocks are required to transfer the command. The most significant bit of the command is transferred first.
- Three dummy bytes are then clocked in for the address. These clocks are required to provide time for the device to exit power-down mode and fetch the device ID. A total of 24 clocks are required to transfer the three dummy bytes.
- For this operation, the $\overline{CS}$ pin continues to be asserted after the 8th clock. In this operation, the $\overline{CS}$ pin is held low for the time it takes to transfer the Device ID. Therefore, 40 clocks are required to complete this operation; 8 for the command, 24 for the dummy bytes, and 8 clocks for the device ID.
- The device ID is shifted out on the SO pin, with the most significant bit of the value being transmitted first. The device ID is read out continuously until the $\overline{CS}$ pin is deasserted.

7.30.6 Transfer Sequence — Resume from Ultra-Deep Power-Down

To perform the resume from Ultra-Deep Power-Down operation, the $\overline{CS}$ pin is asserted and the information transferred as follows:

- The ABh command is clocked into the device. Eight clocks are required to transfer the command. The most significant bit of the command is transferred first.
- Once $\overline{CS}$ is deasserted, hardware initiates an internal reset of the device and the SRAM contents are lost.
- The device exits the Ultra Deep Power-Down mode within the time t_{RUDPD} as defined in Figure 8.5, AC Characteristics – All Other Parameters.

Figure 27 shows a timing diagram of this timing parameter.

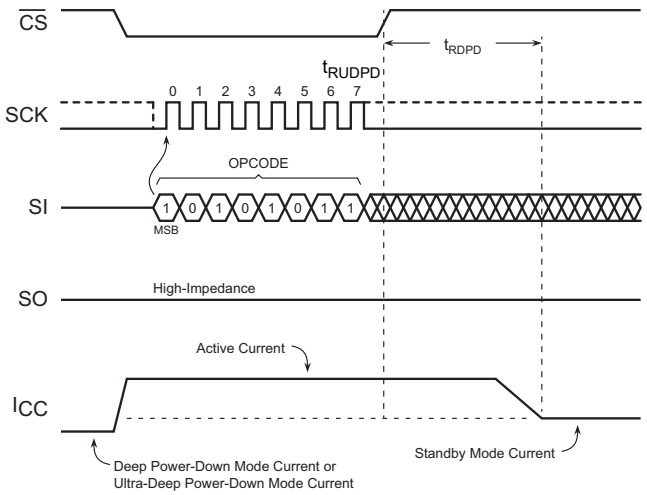

Figure 27. Resume from Deep Power-Down or Ultra-Deep Power-Down

7.30.7 Programming Restrictions

The Resume from Deep Power-Down command adheres to the following programming restrictions.

- The complete command must be clocked into the device before the $\overline{CS}$ pin is deasserted.
- The $\overline{CS}$ pin must be deasserted on a byte boundary (multiple of eight bits). Otherwise, the device aborts the operation and no action is taken.

© 2022 Renesas Electronics

7.31 Ultra-Deep Power-Down (79h)

The Ultra-Deep Power-Down (UDPD) mode allows the device to further reduce energy consumption compared to Deep Power-Down mode by shutting down additional internal circuitry. The UDPD mode can be entered by either executing the 79h command, or by executing the B9h command with bit 7 (PDM) of Status Register 4 cleared. When the device is in the Ultra-Deep Power-Down mode, all commands except the ABh command are ignored.

Execution of the ABh command allows the device to exit from Ultra-Deep Power-Down mode. Execution of this command while in Ultra-Deep Power-Down causes the device to initialize, and then enters standby mode.

7.31.1 Transfer Format

The 79h command follows the 1-0-0 transfer format described in Section 5.2, where the command is transferred on the SI pin. No address or data are transferred for this command. See Figure 3 for a timing diagram of this operation.

7.31.2 Transfer Sequence

To perform the Ultra-Deep Power-Down operation, the $\overline{CS}$ pin is asserted and the information transferred as follows:

- The 79h command is clocked into the device. Eight clocks are required to transfer the command. The most significant bit of the command is transferred first.
- When the $\overline{CS}$ pin is deasserted, the device enters the Ultra-Deep Power-Down mode within the maximum time of t_{EUDPD}. Any additional data clocked into the device after this command is ignored.

Figure 28 shows a diagram with this timing parameter.

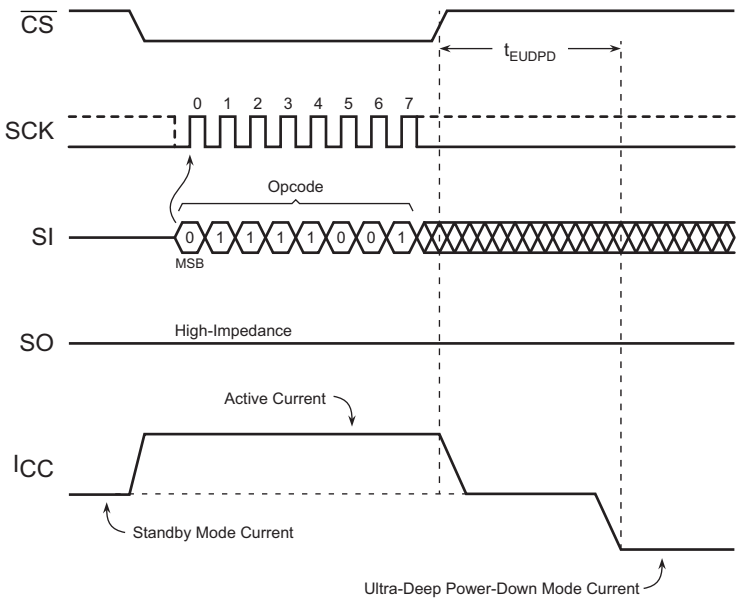

Figure 28. Entering Ultra-Deep Power-Down State

See Table 20 for more information on the transfer sequence for this command.

7.31.3 Programming Restrictions

The following events can cause the Ultra-Deep Power-Down operation to be aborted.

- The $\overline{CS}$ pin must be deasserted on a byte boundary (multiple of eight bits). Otherwise, the device aborts the operation and return to the standby mode once the $\overline{CS}$ pin is deasserted. Also, the device defaults to the standby mode after a power cycle.
- The 79h command is ignored if an internally self-timed operation such as a program or erase cycle is in progress. The 79h command must be reissued after the internally self-timed operation has been completed. Software can monitor the $\overline{RDY}$/BSY bit in Status Register 1 to determine when the program or erase operation has completed.

© 2022 Renesas Electronics

7.32 Enable Reset (66h) and Reset Device (99h)

Executing the Reset (66h/99h) command terminates all internal operations and causes the device to initialize. After reset, the device is set to its default parameters and all previous register settings are lost.

7.32.1 Transfer Format

The 66h/99h commands are issued as two back-to-back 1-0-0 commands described in Section 5.2. The first command (66h) enables the reset function and is transferred on the SI pin. The second command (99h) immediately follows the 66h command and initiates a reset of the device. This command is also transferred on the SI pin. No address or data are transferred for this command. See Figure 3 for a timing diagram of this operation.

7.32.2 Transfer Sequence

To perform a device reset operation, the $\overline{CS}$ pin is asserted and the information transferred as follows:

- The 66h command is clocked into the device. Eight clocks are required to transfer the command. The most significant bit of the command is transferred first.
- Deassert the $\overline{CS}$ pin for one clock cycle.
- Reassert the $\overline{CS}$ pin.
- The 99h command is clocked into the device. Eight clocks are required to transfer the command. The most significant bit of the command is transferred first. Note that no other command can be issued in between the 66h command and the 99h command.
- When the $\overline{CS}$ pin is deasserted after the 99h command, the device initiates the reset operation within a time of t_{SWRST}. During the reset sequence, no other command can be accepted by the device.

See Table 20 for more information on the transfer sequence for this command.

Figure 29 shows an example of the back-to-back command sequence.

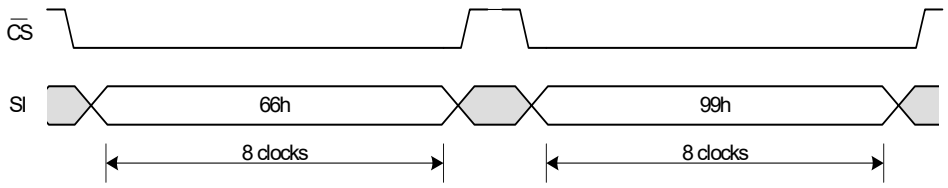

Figure 29. Enable Reset and Reset Command Sequence (SPI Mode)

7.32.3 Programming Restrictions

The Enable Reset command adheres to the following programming restrictions.

- The complete command must be clocked into the device before the $\overline{CS}$ pin is deasserted.
- The $\overline{CS}$ pin must be deasserted on a byte boundary (multiple of eight bits). Otherwise, the device aborts the operation and no action is taken.
- If an erase or program operation has been suspended (75h command has been executed prior to the 66h/99h command) and the device reset sequence is initiated, the data is corrupted. To prevent this from happening, check the $\overline{RDY}$/BSY in Status Register 1 and the SUSP bit in Status Register 2 to make sure each bit is cleared before issuing the 66h/99h Reset command sequence.

© 2022 Renesas Electronics

7.33 Terminate (F0h)

In some applications, it may be necessary to prematurely terminate a program or erase operation rather than wait for the program or erase operation to complete normally. The *Terminate* command immediately aborts any operation in progress and returns the device to an idle state.

Since the need to terminate the operation is immediate, the Write Enable command does not need to be issued prior to the *Terminate* command. Therefore, the *Terminate* command operates independently of the state of the WEL bit in Status Register 1.

Once this command is issued, the operation in progress cannot be continued. To suspend and then continue an operation, use the Program/Erase Suspend (75h) and Program/Erase Resume (7Ah) commands.

7.33.1 Command Prerequisites

The *Terminate* command can be executed only if the command has been enabled by setting the Reset Enabled (RSTE) bit in Status Register 5 using the Write Status Register 5 command (71h + 05h address offset). This command must be executed before the *Terminate* command is executed. If the Reset command has not been enabled (the RSTE bit in is cleared), then any attempt at executing the *Terminate* command is ignored.

7.33.2 Transfer Format

The F0h command follows the 1-0-1 transfer format described in Section 5.2, where the command and data are transferred on the SI pin. Immediately after the command is transferred, a confirmation data byte is transferred. This byte is required by the hardware before the *Terminate* command can be executed. A timing diagram of this operation is shown in Figure 6.

7.33.3 Transfer Sequence

To perform device reset operation, the $\overline{CS}$ pin is asserted and the information transferred as follows:

- The F0h command is clocked into the device. Eight clocks are required to transfer the command. The most significant bit of the command is transferred first.
- The D0h confirmation byte is clocked into the device. Eight clocks are required to transfer the command. The most significant bit of the command is transferred first. Note that is the confirmation byte is any value other than D0h, the entire command is ignored and the device returns to the idle state.
- When the $\overline{CS}$ pin is deasserted after the D0h confirmation byte, the device initiates the terminate operation within a time of t_{SWTERM}. During the terminate sequence, no other command can be accepted by the device.

See Table 20 for more information on the transfer sequence for this command.

7.33.4 Programming Restrictions

The F0h *Terminate* command adheres to the following programming restrictions.

- If a program or erase operation is in progress and cannot complete before the operation is terminated via the F0h command, the contents of the page being programmed or erased cannot be guaranteed to be valid.
- The F0h command does not reset the device configuration registers in volatile mode. If a reset of the internal state is desired, perform a 66h/99h command. This command resets the device and all programmable parameters and all volatile register contents are lost.
- The $\overline{CS}$ pin must be deasserted on a byte boundary (multiple of eight bits). Otherwise, the device aborts the operation and returns to the standby mode once the $\overline{CS}$ pin is deasserted. Also, the device defaults to the standby mode after a power cycle.

© 2022 Renesas Electronics

7.34 Read Manufacturer/Device ID (90h)

The Read Manufacturer/Device ID (90h) command provides both the JEDEC assigned manufacturer ID, and the specific device ID.

7.34.1 Transfer Format

The 90h command follows the 1-1-1 transfer format described in Section 5.2, where the command and address are transferred on the SI pin, and data is transferred on the SO pin. See Figure 7 for timing diagram of this operation.

7.34.2 Transfer Sequence

To perform the Read Array operation, the $\overline{CS}$ pin is asserted and the information transferred as follows:

- The 90h command is clocked into the device. Eight clocks are required to transfer the command. The most significant bit of the command is transferred first.
- Three dummy bytes are clocked in during the address phase. A total of 24 clocks are required. These three dummy bytes are not used
- Data is output on the SO pin. Two bytes are transferred, requiring a total of 16 clock cycles. The data is driven onto the bus as follows:
  - 1st data clock: bit 7 of the manufacturer ID is output on the SO pin
  - 2nd data clock: bit 6 of the manufacturer ID is output on the SO pin
  - .....
  - 8th data clock: bit 0 of the manufacturer ID is output on the SO pin
  - 9th data clock: bit 7 of the device ID is output on the SO pin
  - 10th data clock: bit 6 of the device ID is output on the SO pin
  - .....
  - 16th data clock: bit 0 of the device ID is output on the SO pin
- Deasserting the $\overline{CS}$ pin terminates the read operation and puts the SO pin into high-impedance state. If the $\overline{CS}$ pin remains asserted, the device continues to shift out the manufacturer ID followed by the device ID.

See Table 20 for more information on the transfer sequence for this command.

© 2022 Renesas Electronics

7.35 Quad I/O Read Manufacturer/Device ID (94h)

The Read Manufacturer/Device ID command operates in quad I/O mode, where the SI, SO, $\overline{WP}$, and $\overline{HOLD}$ pins are all bidirectional, to allow the manufacturer and device ID information to be transmitted at four times the speed of the Read Manufacturer/Device ID command (90h).

7.35.1 Transfer Format

The 94h command follows the 1-4-4 transfer format described in Section 5.6, where the command is transferred on the SI pin, and the address and data are transferred on the SI, SO, $\overline{WP}$, and $\overline{HOLD}$ pins. See Figure 15 for a timing diagram of this transaction.

7.35.2 Transfer Sequence

To perform the Quad Read Manufacturer/Device ID command, the $\overline{CS}$ pin is asserted and the information transferred as follows:

- The 94h command is clocked into the device. Eight clocks are required to transfer the command. The most significant bit of the command is transferred first.
- Three dummy address bytes are clocked in during the address phase. A total of 6 clocks are required. These three dummy bytes are ignored.
- The mode byte is clocked into the device. Two clocks are required to transfer the command. The one dummy byte is ignored.
- Four dummy clocks are driven to the device prior to the output of data.
- Data is output on the SI, SO, $\overline{WP}$, and $\overline{HOLD}$ pins. Each byte transfer requires two clock cycles. The data is always output with the most significant bit of the byte transferred first. The first byte transferred is the manufacturer ID. The second byte transferred is the device ID. As long as $\overline{CS}$ is asserted, hardware continues to shift these two bytes out onto the bus. Each data byte is shifted out of the device as follows:
  - First data clock: bit 7 of the manufacturer ID is output on the $\overline{HOLD}$ pin
  - First data clock: bit 6 of the manufacturer ID is output on the $\overline{WP}$ pin
  - First data clock: bit 5 of the manufacturer ID is output on the SO pin
  - First data clock: bit 4 of the manufacturer ID is output on the SI pin
  - Second data clock: bit 3 of the manufacturer ID is output on the $\overline{HOLD}$ pin
  - Second data clock: bit 2 of the manufacturer ID is output on the $\overline{WP}$ pin
  - Second data clock: bit 1 of the manufacturer ID is output on the SO pin
  - Second data clock: bit 0 of the manufacturer ID is output on the SI pin
  - In clocks 3 and 4, the device ID is shifted out on byte 2 in the same manner as above

© 2022 Renesas Electronics

7.36 Read JEDEC ID (9Fh)

The Read JEDEC ID command allows software to identify the manufacturer and device ID information for the device while it is in the system. This command allows the ID information to be read out a relatively low clock frequency to ensure the device can be identified. Once the identification process is complete, the application can increase the clock frequency as necessary. For more information, see the Serial Flash Discoverable Parameters (SFDP) JEDEC specification, edition JESD216C.

7.36.1 Transfer Format

The 9Fh command follows the 1-0-1 transfer format described in Section 5.2, where the command is transferred on the SI pin, and data is transferred on the SO pin. See Figure 30 for timing diagram of this operation. Note that no address is required for this type of read operation.

7.36.2 Transfer Sequence

To perform the JEDEC ID operation, the $\overline{CS}$ pin is asserted and the information transferred as follows:

- The 9Fh command is clocked into the device. Eight clocks are required to transfer the command. The most significant bit of the command is transferred first. No address is required for this transaction.
- Data is output on the SO pin. Five bytes are transferred, requiring a total of 40 clock cycles. The data is driven onto the bus as follows:
  - 1st data clock: bit 7 of the manufacturer ID is output on the SO pin
  - .....
  - 8th data clock: bit 0 of the manufacturer ID is output on the SO pin
  - 9th data clock: bit 7 of the device ID byte 1 is output on the SO pin
  - .....
  - 16th data clock: bit 0 of the device ID byte 1 is output on the SO pin
  - 17th data clock: bit 7 of the device ID byte 2 is output on the SO pin
  - .....
  - 24th data clock: bit 0 of the device ID byte 2 is output on the SO pin
  - 25th data clock: bit 7 of the extended device string length byte is output on the SO pin
  - .....
  - 32nd data clock: bit 0 of the extended device string length byte is output on the SO pin
  - 33rd data clock: bit 7 of the extended device string value byte is output on the SO pin
  - .....
  - 40th data clock: bit 0 of the extended device string value byte is output on the SO pin
- Deasserting the $\overline{CS}$ pin terminates the read operation and puts the SO pin into high-impedance state. If the $\overline{CS}$ pin remains asserted, the device continues to shift out the manufacturer ID followed by the device ID.

See Table 20 for more information on the transfer sequence for this command.

Table 36 and Table 37 show the contents of each data byte.

Table 36. Manufacturer and Device ID Details

Data Type	Bit 7	Bit 6	Bit 5	Bit 4	Bit 3	Bit 2	Bit 1	Bit 0	Hex Value	Details
Manufacturer ID	JEDEC Assigned Code								1Fh	JEDEC Code: 0001 1111 (1Fh for Renesas Electronics)
	0	0	0	1	1	1	1	1		
Device ID (Part 1)	Family Code			Density Code					45h	Family Code: 010 (4h) Density Code: 00101 (05h)
	0	1	0	0	0	1	0	1		
Device ID (Part 2)	Sub Code			Sub-family Code		Revision Code			08h	Sub Code: 000 Sub-family Code: 01
	0	0	0	0	1	0	0	0		
Device ID (Part 3) (EDI String Length)	Number of Extended Device ID Bytes to Follow								01h	Bytes to follow: 1
	0	0	0	0	0	0	0	1		
Device ID (Part 4) (EDI String Value)	Extended device Identity Value								0xh	x: Device Variant/Option. See table below.
	0	0	0	0	x	x	x	x		

© 2022 Renesas Electronics

Table 37. Device ID Part 4 Variants — EDI String Value

EDI String Value	Variant
00h	Initial device
01h - 07h	TBD
08h - 0Fh	Reserved

7.36.3 Transfer Diagram

Figure 30 shows the bus signals during an indirect register read operation. This command requires only a single 8-bit address.

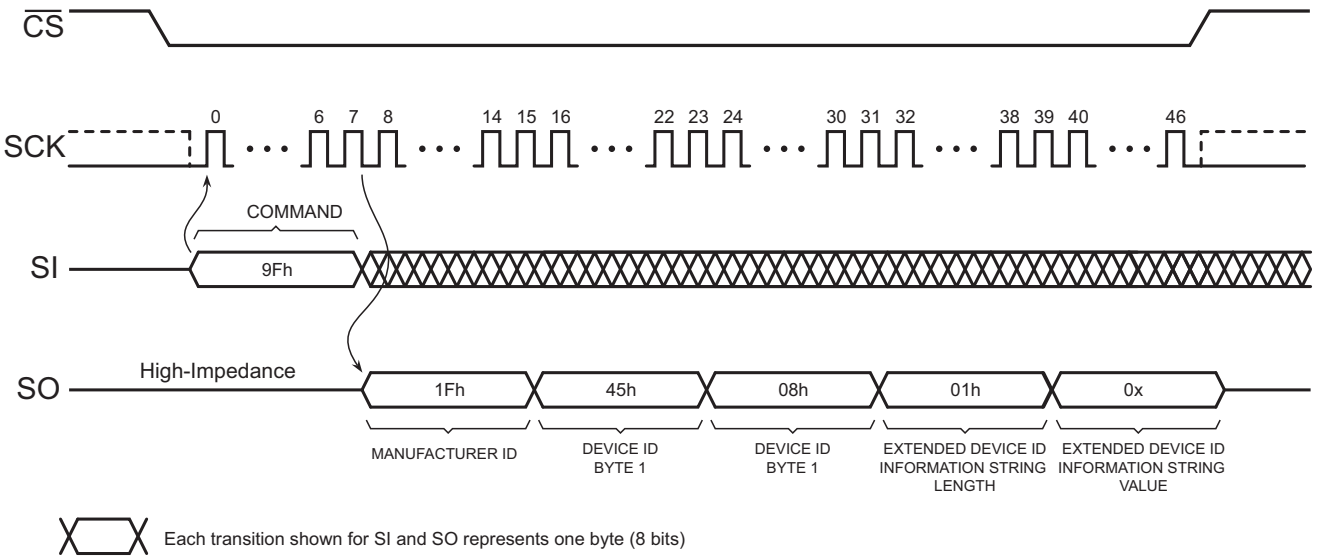

Figure 30. Read JEDEC ID

© 2022 Renesas Electronics

7.37 Serial Flash Discoverable Parameters (5Ah)

The device contains a 256-byte Serial Flash Discoverable Parameter (SFDP) register. The SFDP register can be sequentially read in a similar fashion to the Read Array operation up to the maximum clock frequency specified by f_{SCK}.

7.37.1 Transfer Format

The 5Ah command follows the 1-1-1 transfer format shown in Section 5.2.4, where the command, address, and dummy bytes are transferred on the SI pin, and data is transferred on the SO pin. Figure 8 shows a timing diagram of a read operation with dummy bytes. In this diagram one byte of data is transferred. Additional bytes can be transferred as long as the CS pin is asserted.

7.37.2 Transfer Sequence

To perform the SFDP operation, the CS pin is asserted and the information transferred as follows:

- The 5Ah command is clocked into the device. Eight clocks are required to transfer the command. The most significant bit of the command is transferred first.
- Three address bytes are clocked in to specify the starting address location of the first byte to read within the memory array. A total of 24 clocks are required to transfer the address. The most significant bit of the address (A[23]) is transferred first.
- Following the three address bytes, an additional dummy byte must be clocked into the device.
- Data is output on the SO pin. Each byte transfer requires eight clock cycles. The data is always output with the most significant bit of the byte transferred first. The number of bytes transferred is determined by software. The transfer can be anywhere from a single byte to the entire SFDP value. The most significant bit of each data byte is transferred first.
- Deasserting the CS pin terminates the read operation and puts the SO pin into high-impedance state. The CS pin can be deasserted at any time and does not require a full byte of data be read. The format of the SFDP re ister follows the format provided in JEDEC Standard No. 216 Rev B.

7.37.3 Programming Restrictions

When the last byte (0000FFh) of the SFDP Security Register has been read, the device continues reading back at the beginning of the register (000000h). No delays are incurred when wrapping around from the end of the register to the beginning of the register.

7.37.4 SFDP Organization

Contact Renesas Electronics for SFDP table information.

© 2022 Renesas Electronics

8. Electrical Specifications

8.1 Absolute Maximum Ratings

Temperature under bias . . . . . -55 °C to +125 °C
Storage Temperature. . . . . -65 °C to +150 °C
All input voltages (including NC pins) with respect to ground. . . . . -0.6V to (V_{CC} + 0.5V)
All output voltages with respect to ground-0.6V to (V_{CC} + 0.5V)

*Notice: Stresses beyond those listed under “Absolute Maximum Ratings” may cause permanent damage to the device. This is a stress rating only and functional operation of the device at these or any other conditions beyond those indicated in the operational sections of this specification is not implied. Exposure to absolute maximum rating conditions for extended periods may affect device reliability.

8.2 DC and AC Operating Range

Parameter	AT25FF081A
Operating Temperature (Case)	-40 °C to 85 °C
V_{CC} Power Supply	1.65 V to 3.6 V

8.3 DC Characteristics

Symbol	Parameter	Condition	1.65V to 3.6V			Units
			Min	Typ[1]	Max	
I_{UDPD}[2]	Ultra-Deep Power-Down Current	$\overline{CS}$ = V_{CC}. All other inputs at 0V or V_{CC}		5 - 7	250	nA
I_{DPD}	Deep Power-Down Current	$\overline{CS}$, $\overline{RESET}$, $\overline{WP}$ = V_{CC}. All other inputs at 0V or V_{CC}		8.5	19	µA
I_{SB}[3]	Standby Current	$\overline{CS}$, $\overline{RESET}$, $\overline{WP}$ = V_{CC}. All other inputs at 0V or V_{CC}		30	50	µA
I_{CC1}[4]	SPI (33 MHz)	I_{OUT} = 0 mA		5.6	10.5	mA
	SPI (104 MHz)	I_{OUT} = 0 mA		8.5	14.5	mA
	Dual (104 MHz)	I_{OUT} = 0 mA		10.6	15	mA
	Quad (104 MHz)	I_{OUT} = 0 mA		13.0	17.5	mA
I_{CC3}	Active Current, Program Operation	$\overline{CS}$ = V_{CC}		8.5	14.5	mA
I_{CC4}	Active Current, Erase Operation	$\overline{CS}$ = V_{CC}		9.6	15.5	mA
I_{LI} [5]	Input Load Current	All inputs at CMOS levels			±2	µA
I_{LO}	Output Leakage Current	All inputs at CMOS levels			±2	µA
V_{IL}	Input Low Voltage				V_{CC} x 0.2	V
V_{IH}	Input High Voltage		V_{CC} x 0.8			V
V_{OL}	Output Low Voltage	I_{OL} = 100 µA			0.2	V
V_{OH}	Output High Voltage	I_{OH} = -100 µA	V_{CC} - 0.2			V

1. Typical values measured at 1.8V @ 25 °C for the 1.65 V to 3.6 V range.
2. I_{UDPD} value is estimated. Not 100% tested.
3. During continuous read mode (0-4-4), I_{SB} may exceed maximum limit.
4. Checkerboard pattern.
5. $\overline{WP}$ (IO_2) and $\overline{HOLD}$/$\overline{RESET}$ (IO_3) pins have an internal pull-up resistor. It's input load current is +2 / -40 µA.

© 2022 Renesas Electronics

8.4 AC Characteristics - Maximum Clock Frequencies

Symbol	Parameter	1.65V to 3.6V			2.7V to 3.6V			Units
		Min	Typ	Max[1]	Min	Typ	Max	
f_{SCK}	Maximum clock frequency for all operations (except 03h, 0Bh, 3Bh, 6Bh, EBh, and E7h commands)			108			133	MHz
	Maximum clock frequency for 0Bh and 3Bh commands			104			104	MHz
	Maximum clock frequency for 6Bh command			108			108	MHz
	Maximum clock frequency for EBh and E7h commands			108			133	MHz
f_{RDLF}	Maximum clock frequency for 03h command (Read Array – Low Frequency)			40			40	MHz

1. See Table 21 and Table 22 for the maximum frequency of EBh/E7h commands in various modes.

8.5 AC Characteristics – All Other Parameters

Symbol[1]	Parameter	1.65V to 3.6V			Units
		Min	Typ	Max	
t_{CLKH}	SCK High Time	4.5			ns
t_{CLKL}	SCK Low Time	4.5			ns
t_{CLKR}	Clock Rise Time, Peak-to-Peak (Slew Rate)	0.75			V/ns
t_{CLKF}	Clock Fall Time, Peak-to-Peak (Slew Rate)	0.75			V/ns
t_{CSH}	Minimum $\overline{CS}$ High Time	35			ns
t_{CSLS}	$\overline{CS}$ Low Setup Time (relative to clock)	6			ns
t_{CSLH}	$\overline{CS}$ Low Hold Time (relative to clock)	6			ns
t_{CSHS}	$\overline{CS}$ High Setup Time (relative to clock)	6			ns
t_{CSHH}	$\overline{CS}$ High Hold Time (relative to clock)	6			ns
t_{DS}	Data In Setup Time	2			ns
t_{DH}	Data In Hold Time	1			ns
t_{DIS}	Output Disable Time			8	ns
t_V	Output Valid Time			8	ns
t_{OH}	Output Hold Time	0			ns
t_{HLS}	$\overline{HOLD}$ Low Setup Time (relative to clock)	6			ns
t_{HLH}	$\overline{HOLD}$ Low Hold Time (relative to clock)	6			ns
t_{HHS}	$\overline{HOLD}$ High Setup Time (relative to clock)	6			ns
t_{HHH}	$\overline{HOLD}$ High Hold Time (relative to clock)	6			ns
t_{HLQZ}	$\overline{HOLD}$ Low to Output High-Z			7	ns
t_{HHQX}	$\overline{HOLD}$ High to Output Low-Z			7	ns
t_{WPS}	Write Protect Setup Time	20			ns
t_{WP}[1]	Write Protect Hold Time	100			ns
t_{EDPD}	$\overline{CS}$ High to Deep Power-Down			3	µs
t_{EUDPD}	$\overline{CS}$ High to Ultra Deep Power-Down			3	µs
t_{SWTERM}	Resume from Terminate Command Time			50	µs
t_{SWRST}	Resume from Software Reset Time			200	µs
t_{RUDPD}[2]	Resume form Ultra Deep Power-Down Time		160	200	µs
t_{RDPD}	Resume from Deep Power-Down Time			35	µs

1. Not 100% tested (value guaranteed by design and characterization).
2. The maximum spec is valid for UDPD hold time (duration of Ultra-Deep Power-Down state) of >550 ms. For the shorter UDPD hold times, T_{RUDPD} may reach 1200 µs under some conditions.

© 2022 Renesas Electronics

8.6 Program and Erase Characteristics

Symbol	Parameter		1.65 V - 3.6 V			2.7 V - 3.6 V			Units
			Min	Typ [1]	Max [2]	Min	Typ [1]	Max [2]	
t_{PP}	Page Program Time (256 Bytes)			3.8	7.8		3.2	7.8	ms
t_{BP} [3]	Byte Program Time			24			24		µs
t_{BLKE}	Block Erase Time	4 kB		80	125		70	125	ms
		32 kB		560	850		470	850	ms
		64 kB		1100	1700		920	1700	ms
t_{CHPE}	Chip Erase Time (8M density)			18			15.5		sec
t_{SUS}	Suspend Time (Program)				50			50	µs
	Suspend Time (Erase)				50			50	µs
t_{RES}	Resume Time (Program)			8	10		8	10	µs
	Resume Time (Erase)			8	10		8	10	µs
t_{OTPP}	OTP Security Register Program Time (<= 10K)			5	6		5	6	ms
t_{WRSR}	Write Status Register Time			7.2	37		6.8	37	ms

1. Typical values measured at 1.8V @ 25 ºC for the 1.65 V to 3.6 V range, 3.3 V @ 25 ºC for the 2.7 V to 3.6 V range.
2. Unless otherwise specified, maximum is worst case measurement at cycling conditions after 100K cycles.
3. Program time after the first byte varies.

8.7 Power On Timing

When power is first applied to the device, or when recovering from a reset condition, the output pin (SO) is in a high impedance state, and a high-to-low transition on the $\overline{CS}$ pin is required to start a valid command. The SPI mode (Mode 3 or Mode 0) is automatically selected on every falling edge of $\overline{CS}$ by sampling the inactive clock state.

As the device initializes, there is a transient current demand. The system needs to be capable of providing this current to ensure correct initialization. During power-up, the device must not be accessed for at least the minimum t_{VCSL} time after the supply voltage reaches the minimum VCC level (VCC min). While the device is being powered-up, the internal Power-On Reset (POR) circuitry keeps the device in a reset mode until the supply voltage rises above the minimum VCC. During this time, all operations are disabled, and the device does not respond to any commands. (the t_{VCSL} time is measured from when VCC reaches VCC min.)

If Power On Reset (POR) has not been properly completed by the end of t_{VCSL}, the execution of a JEDEC Reset sequence restarts the POR process. This ensures the device can complete POR sequence, even if some aspect of system Power-On voltage ramp-up causes the POR to not initiate or complete correctly.

Figure 31 shows the AC timing during power-up.

© 2022 Renesas Electronics

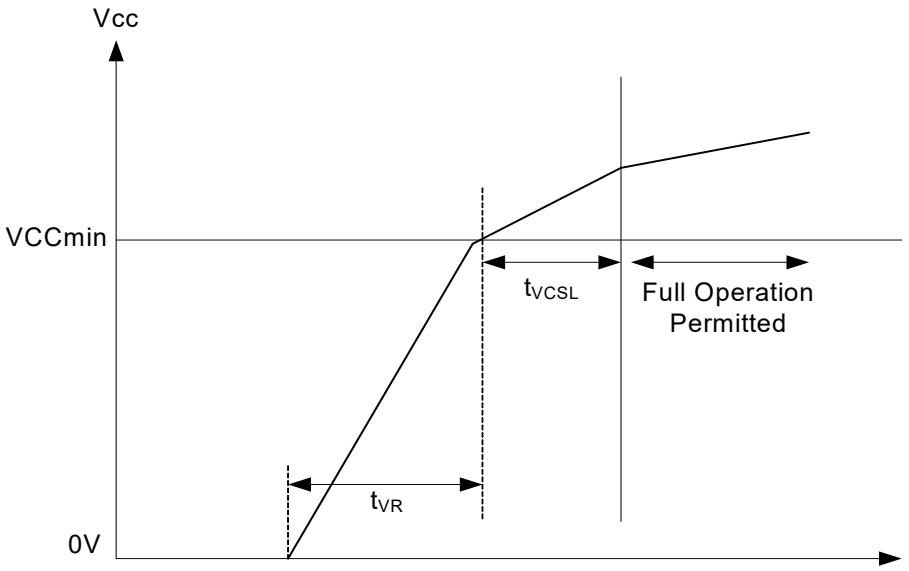

Figure 31. AC Timing During Device Power Up

Table 38. Power On Timing Requirements

Symbol	Parameter	1.65V - 3.6V			Units
		Min	Typ	Max	
t_{VCSL}	Minimum V_{CC} to full operation permitted			200	µs
t_{VR}	V_{CC} rise time (from 0V to VCCmin)		1	6000 [1]	µs/V
t_{WPD}	V_{CC} brown-out low time	300			µs
V_{PWDMAX}	Maximum V_{CC} brown-out			0.2	V

1. 30000 µs/V at -10 ºC to 85 ºC.

Figure 32 shows the AC power-up timing after a brown-out condition.

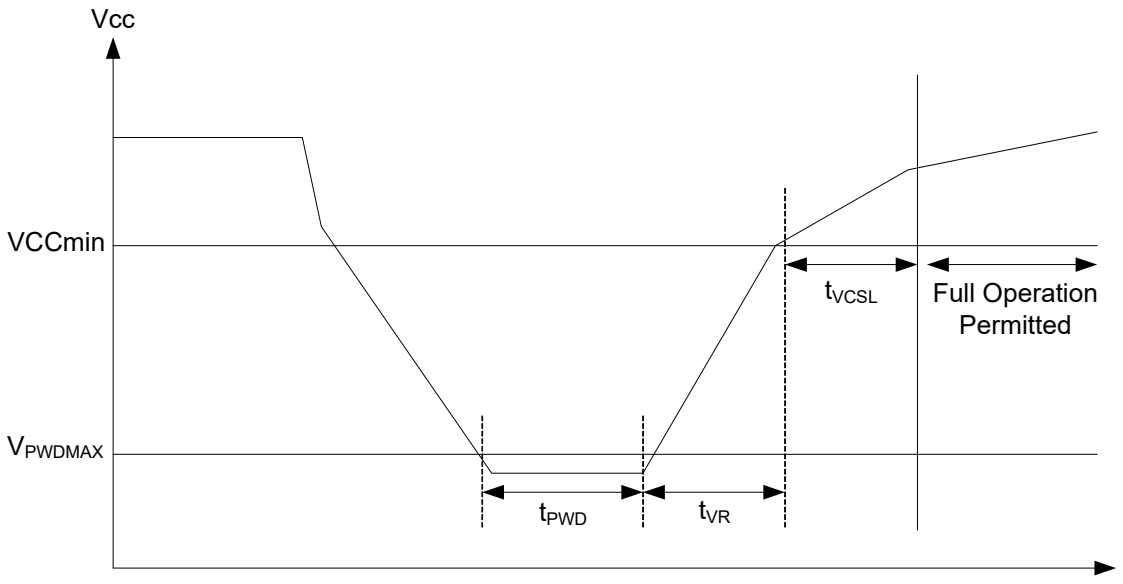

Figure 32. AC Power-up Timing After a Brown-Out

© 2022 Renesas Electronics

8.8 AC Timing Diagrams

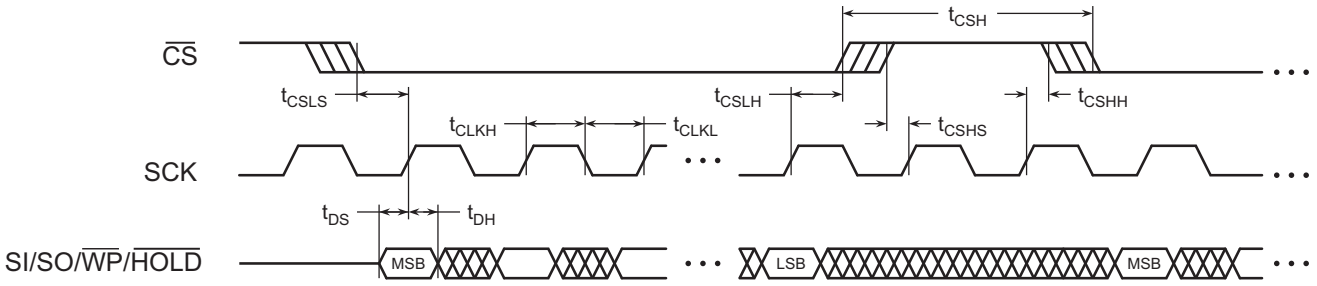

Figure 33. Serial Input Timing

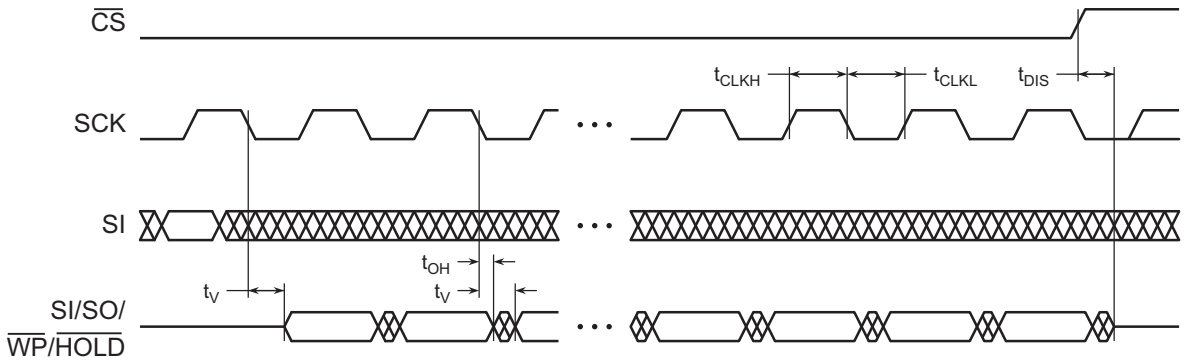

Figure 34. Serial Output Timing

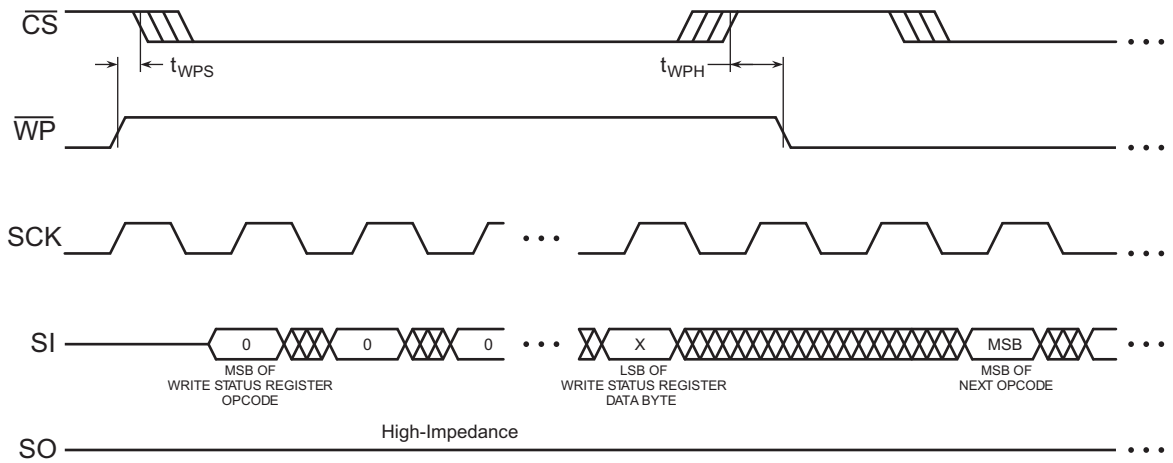

Figure 35. $\overline{WP}$ Timing for Write Status Register Command

© 2022 Renesas Electronics

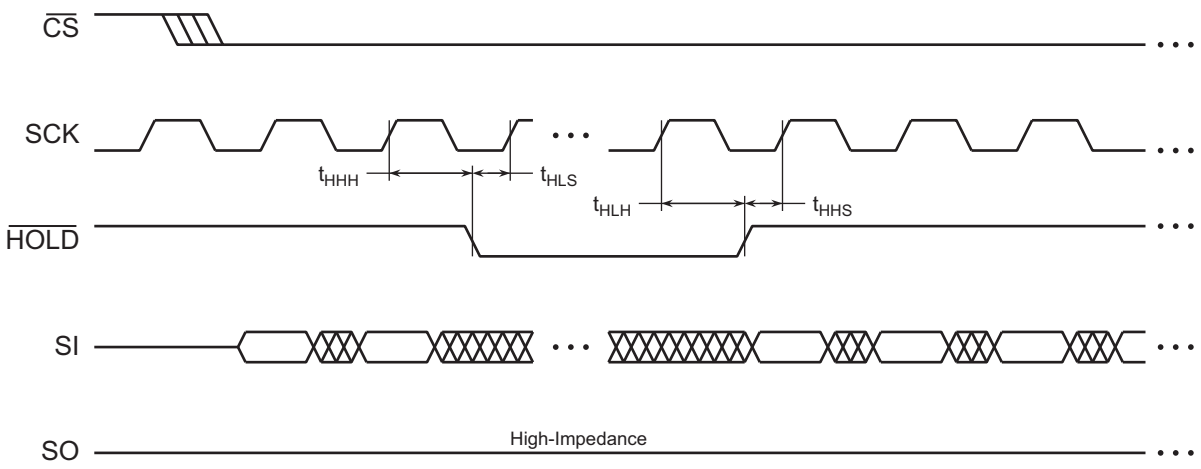

Figure 36. $\overline{\text{HOLD}}$ Timing – Serial Input

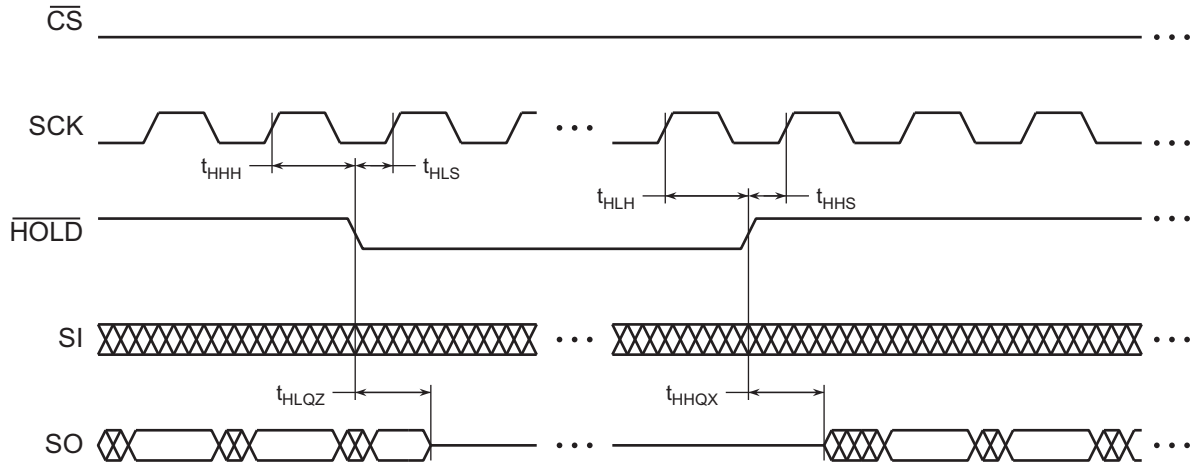

Figure 37. $\overline{\text{HOLD}}$ Timing – Serial Output

© 2022 Renesas Electronics

9. Ordering Information

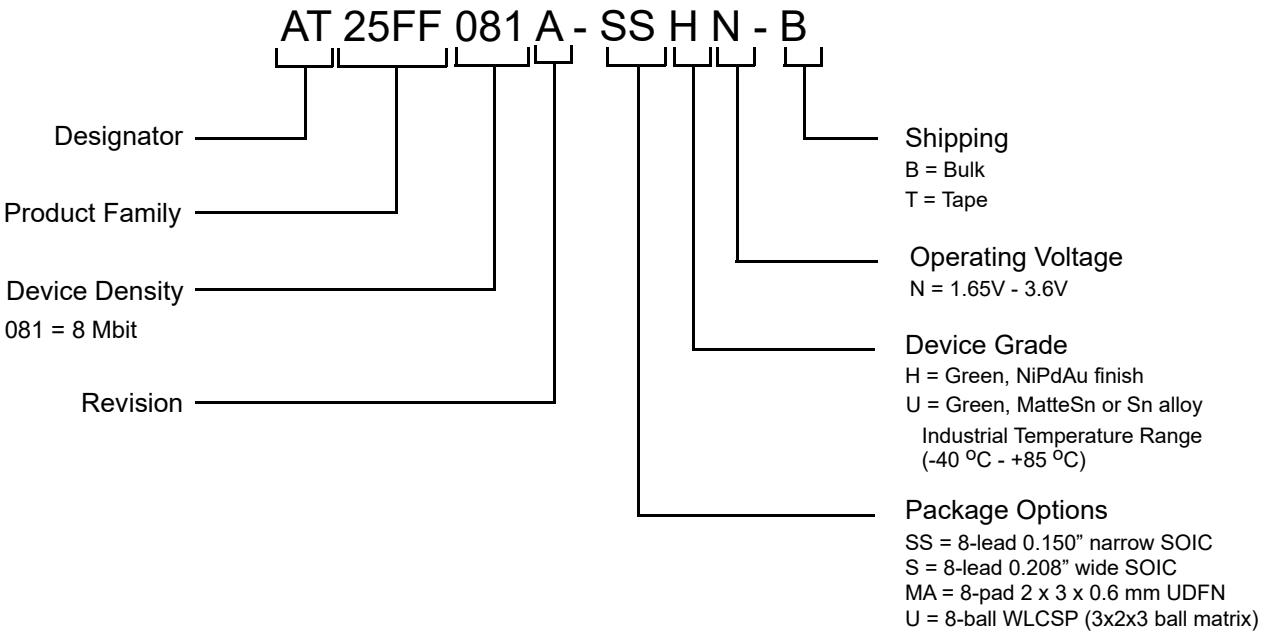

Table 39. Valid Ordering Codes

Valid Part Numbers	Available to Order	Mechanical Drawing	Description	Lead Finish	Operating Voltage	Temperature Range
AT25FF081A-SSHN-B AT25FF081A-SSHN-T	Yes	8S1	8-lead, 0.150" Narrow Plastic Gull Wing Small Outline Package (JEDEC SOIC)	NiPdAu	1.65 V to 3.6 V	Industrial (-40°C to +85°C)
AT25FF081A-SHN-B AT25FF081A-SHN-T		8S2	8-lead, 0.208” Wide Plastic Gull Wing Small Outline Package (EIAJ SOIC)			
AT25FF081A-MAHN-T		8MA3	8-pad, 2x3x0.6 mm, Thermally Enhanced Plastic Ultra Thin Dual Flat No Lead Package (UDFN)			
AT25FF081A-UUN-T		8-WLCSP	8-ball, 3x2x3 Ball Matrix, 0.35 mm Z-Height	SnAgCu		
AT25FF081A-DWF [1]	Contact Renesas Electronics		Die in Wafer Form	--		

1. For more information on Die Wafer From, contact Renesas Electronics.

© 2022 Renesas Electronics

10. Packaging Information

The AT25FF081A device supports the following package types:

- 8S1, 8-lead 0.150 narrow body JEDEC SOIC
- 8S2, 8-lead 0.208 wide body EIAJ
- 8MA3, 2 x 3 x 0.6 mm UDFN
- 8-WLCSP, 8-ball 3 x 2 x 3 array

Each of these packages is described in the following subsections. For information on all other packages, including the Die Wafer Form, contact Renesas Electronics.

© 2022 Renesas Electronics

10.1 8S1 – JEDEC SOIC

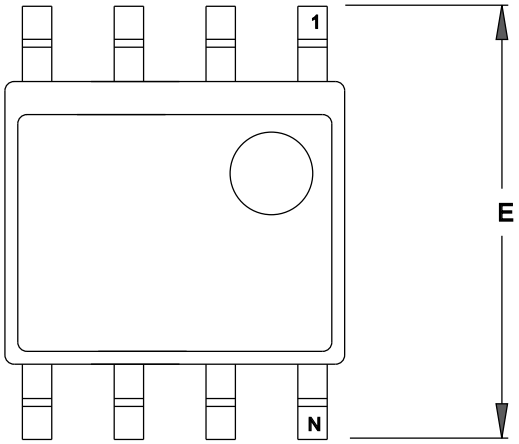

TOP VIEW

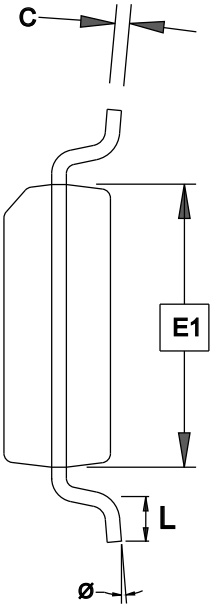

END VIEW

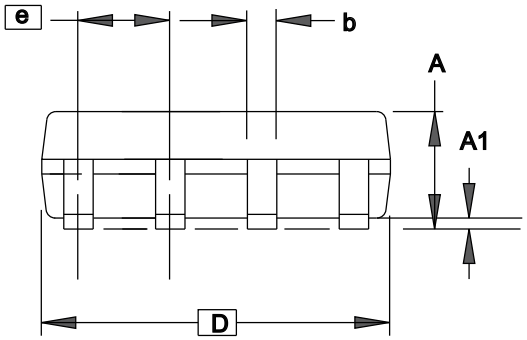

SIDE VIEW

Notes: This drawing is for general information only.
Refer to JEDEC Drawing MS-012, Variation AA
for proper dimensions, tolerances, datums, etc.

COMMON DIMENSIONS
(Unit of Measure = mm)

SYMBOL	MIN	NOM	MAX	NOTE
A	1.35	1.60	1.75	
A1	0.10	0.18	0.25	
b	0.31	0.43	0.51	
C	0.17	0.22	0.25	
D	4.80	4.83	5.05	
E1	3.81	3.90	3.99	
E	5.79	6.00	6.20	
e		1.27 BSC		
L	0.40	0.60	1.27	
Ø	0°	3.75	8°	

5/19/10

	TITLE	GPC	DRAWING NO.	REV.
RENESAS	**8S1, 8-lead (0.150” Narrow Body),** Plastic Gull Wing Small Outline (JEDEC SOIC)	SWB	8S1	F

© 2022 Renesas Electronics

10.2 8S2 – 8-lead EIAJ SOIC

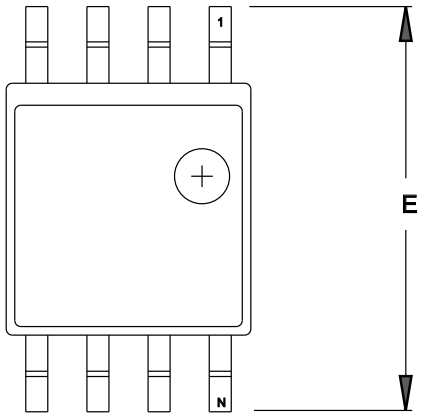

TOP VIEW

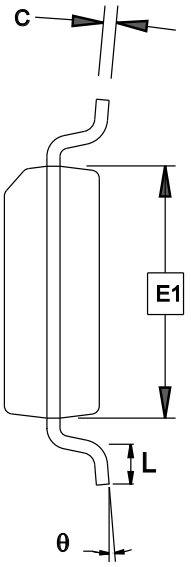

END VIEW

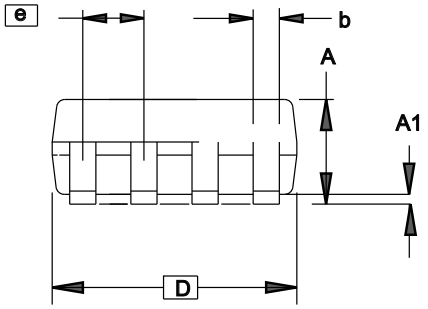

SIDE VIEW

COMMON DIMENSIONS
(Unit of Measure = mm)

SYMBOL	MIN	NOM	MAX	NOTE
A	1.70		2.16	
A1	0.05		0.25	
b	0.35		0.48	4
C	0.15		0.35	4
D	5.13		5.35	
E1	5.18		5.40	2
E	7.70		8.26	
L	0.51		0.85	
θ	0°		8°	
e	1.27 BSC			3

Notes:
1. This drawing is for general information only; refer to EIAJ Drawing EDR-7320 for additional information.
2. Mismatch of the upper and lower dies and resin burrs aren't included.
3. Determines the true geometric position.
4. Values b,C apply to plated terminal. The standard thickness of the plating layer shall measure between 0.007 to .021 mm.

4/15/08

	TITLE	GPC	REV.
RENESAS	8-lead, 208-mil Body, Plastic Small Outline Package (EIAJ)	STN	F

© 2022 Renesas Electronics

10.3 8-Pad 2 x 3 x 0.6 UDFN

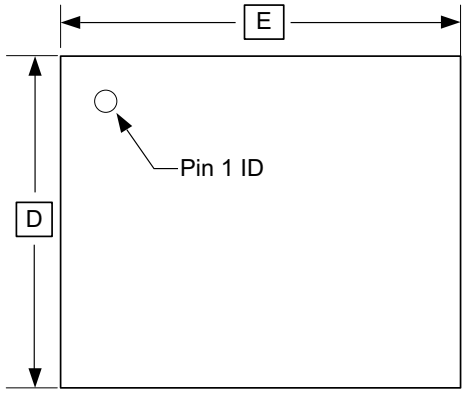

TOP VIEW

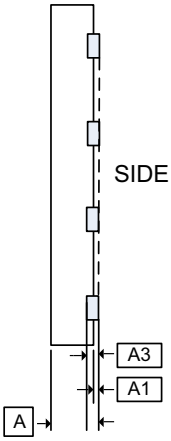

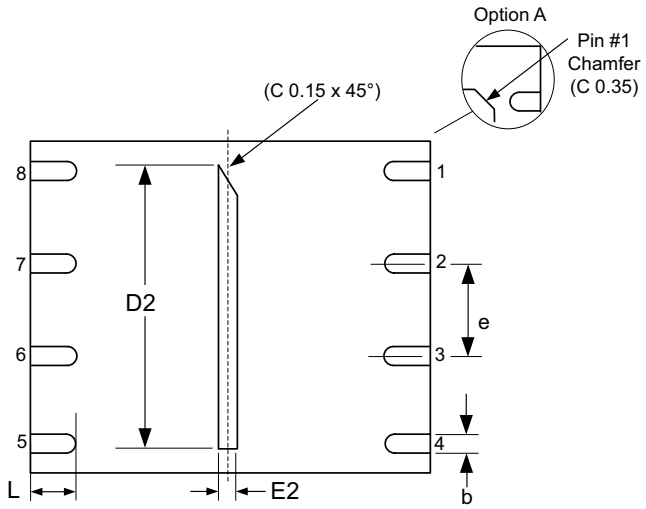

BOTTOM VIEW

COMMON DIMENSIONS
(Unit of Measure = mm)

SYMBOL	MIN	NOM	MAX
A	0.45		0.60
A1	0.00		0.06
A3		0.150 REF	
b	0.20		0.30
D		2.00 BSC ±0.1	
D2	1.55	1.60	1.65
E		3.00 BSC ±0.1	
e		0.50 BSC	
E2	0.15	0.20	0.25
L	0.40	0.50	0.60

Notes: 1. This package conforms to JEDEC reference MO-229, Saw Singulation.
2. The terminal #1 ID is a Laser-marked feature.

RENESAS	TITLE	GPC	DRAWING NO.	REV.
	8-pad (2 x 3 x 0.6 mm Body), Thermally Enhanced Plastic Ultra Thin Dual Flat No Lead Package (UDFN)	YFG	8MA3	D

© 2022 Renesas Electronics

10.4 8-ball 3 x 2 x 3 Array WLCSP

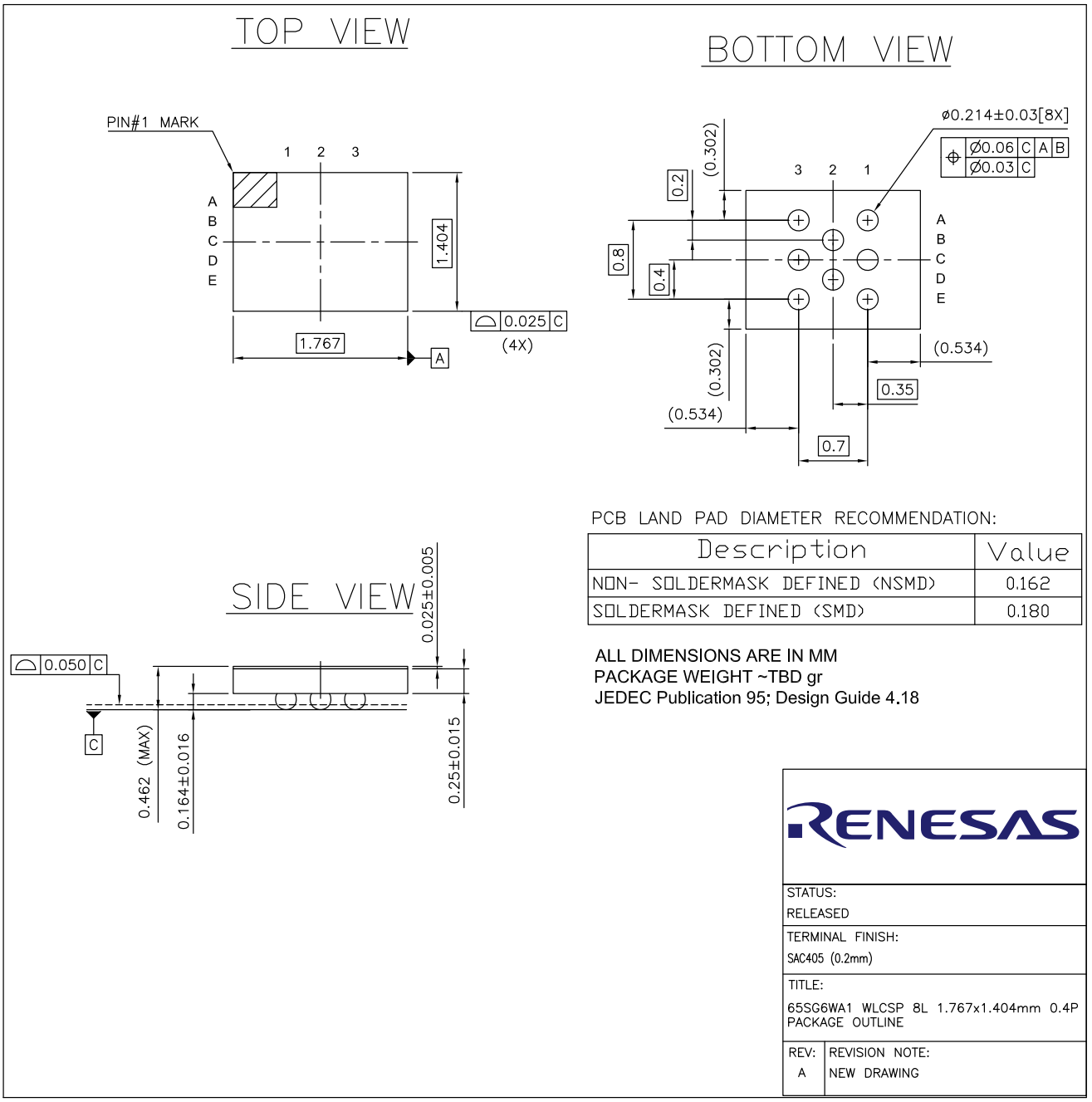

PCB LAND PAD DIAMETER RECOMMENDATION:

Description	Value
NON- SOLDERMASK DEFINED (NSMD)	0.162
SOLDERMASK DEFINED (SMD)	0.180

ALL DIMENSIONS ARE IN MM
PACKAGE WEIGHT ~TBD gr
JEDEC Publication 95; Design Guide 4.18

STATUS: RELEASED	
TERMINAL FINISH: SAC405 (0.2mm)	
TITLE: 65SG6WA1 WLCSP 8L 1.767x1.404mm 0.4P PACKAGE OUTLINE	
REV: A	REVISION NOTE: NEW DRAWING

© 2022 Renesas Electronics

11. Revision History

Revision	Date	Change History
A	3/2020	Initial release of AT25FF081A 8 Mbit data sheet.
B	5/2020	Updated low power dissipation numbers in Features on page 1. Updated Table 8-3, DC Characteristics. Updated Table 8-4, Maximum Operating Frequencies Updated Table 8-5, AC Characteristics Updated Table 8-6, Program and Erase Characteristics Added 2.7V - 3.6V voltage option to Table 8-6. Updated Section 10.3, 8MA3 2 x 3 UDFN package drawing. Changed data sheet status from ADVANCED to PRELIMINARY.
C	8/2020	Updated Table 7-2, Frequency and Number of Dummy Clocks Based on Command Type. Added 2.7V - 3.6V voltage option to Table 8-4. Updated frequency information on page 1. Updated power dissipation information on page 1.
D	01/2021	Changed Table 8-19 to indicate temperature dependency. Updated Table 7-2 and added Table 7-3 in Section 7.4, XiP Mode Read Command. Updated Section 8.3, Maximum Clock Frequencies. Changed value in second footnote of Section 8.5, AC Characteristics - All Other Parameters. Deleted t_{PE} row from table in Section 8.6, Program and Erase Characteristics. Removed footnote 4 from Section 8.3, DC Characteristics.
E	04/2021	Added tolerances to two rows in package drawing in section 10.3. Applied new corporate template to document. Added nominal values to the package drawing in section 10.1.
F	06/2021	Applied new corporate template to document. Removed “Preliminary” designation. Changed values in Tables 21 and 22, Tables 8.3 - 8.6, and Table 38.
G	08/2021	Updated UDFN package drawing in Section 10.3.
H	09/2021	Replaced the paragraph for Accessing a Suspended Area at the end of Section 7.11.5. Included UD package option, as well as part number, for 8-ball WLCSP (4 x 2 ball matrix) in Features List, Package Options. Added package drawing (Section 10.5) for 8-ball WLCSP (4 x 2 ball matrix).
I	11/2021	Updated package drawings for Sections 10.3, 10.4, 10.5. Corrected WLCSP description in Table 39.
J	12/2021	Corrected the AT25FF081A-UDUN-T description in Table 39.
K	01/2022	Applied new corporate template to document. Removed 4x2 ball WLCSP option from document. In Section 5.8.3, deleted the sentence “Note that in the AT25FF081A device all lock bits are set by default, making all memory locations protected.” and added “Note that in the AT25FF081A the factory default setting is the Standard Memory Protection scheme; therefore, all memory locations are unprotected.”

© 2022 Renesas Electronics

IMPORTANT NOTICE AND DISCLAIMER

RENESAS ELECTRONICS CORPORATION AND ITS SUBSIDIARIES (“RENESAS”) PROVIDES TECHNICAL SPECIFICATIONS AND RELIABILITY DATA (INCLUDING DATASHEETS), DESIGN RESOURCES (INCLUDING REFERENCE DESIGNS), APPLICATION OR OTHER DESIGN ADVICE, WEB TOOLS, SAFETY INFORMATION, AND OTHER RESOURCES “AS IS” AND WITH ALL FAULTS, AND DISCLAIMS ALL WARRANTIES, EXPRESS OR IMPLIED, INCLUDING, WITHOUT LIMITATION, ANY IMPLIED WARRANTIES OF MERCHANTABILITY, FITNESS FOR A PARTICULAR PURPOSE, OR NON-INFRINGEMENT OF THIRD PARTY INTELLECTUAL PROPERTY RIGHTS.

These resources are intended for developers skilled in the art designing with Renesas products. You are solely responsible for (1) selecting the appropriate products for your application, (2) designing, validating, and testing your application, and (3) ensuring your application meets applicable standards, and any other safety, security, or other requirements. These resources are subject to change without notice. Renesas grants you permission to use these resources only for development of an application that uses Renesas products. Other reproduction or use of these resources is strictly prohibited. No license is granted to any other Renesas intellectual property or to any third party intellectual property. Renesas disclaims responsibility for, and you will fully indemnify Renesas and its representatives against, any claims, damages, costs, losses, or liabilities arising out of your use of these resources. Renesas' products are provided only subject to Renesas' Terms and Conditions of Sale or other applicable terms agreed to in writing. No use of any Renesas resources expands or otherwise alters any applicable warranties or warranty disclaimers for these products.

(Rev.1.0 Mar 2020)

Corporate Headquarters

TOYOSU FORESIA, 3-2-24 Toyosu,
Koto-ku, Tokyo 135-0061, Japan
www.renesas.com

Contact Information

For further information on a product, technology, the most up-to-date version of a document, or your nearest sales office, please visit:
www.renesas.com/contact/

Trademarks

Renesas and the Renesas logo are trademarks of Renesas Electronics Corporation. All trademarks and registered trademarks are the property of their respective owners.

© 2021 Renesas Electronics Corporation. All rights reserved.