BPSF Series



Features

- RoHS, Halogen Free and REACH Compliance
- Magnetic shielded
- Various package size and wide inductance range

Applications

- AP Routers
- STBs
- LCD TVs and monitors
- Game consoles
- LED lightings
- DC/DC converters

Products Identification

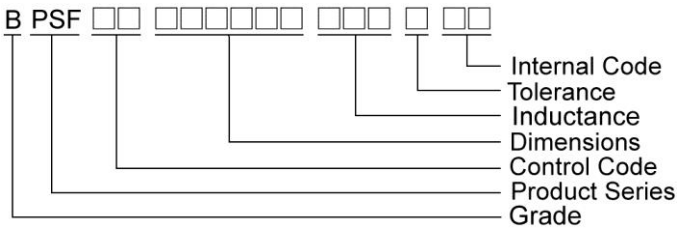

Shape and Dimensions

BPSF00060628

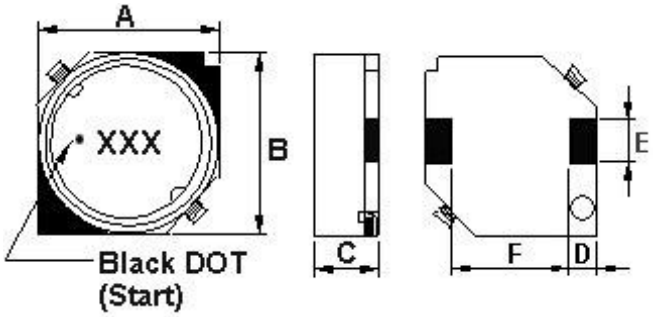

BPSF00070728/070730/070732/ 070745

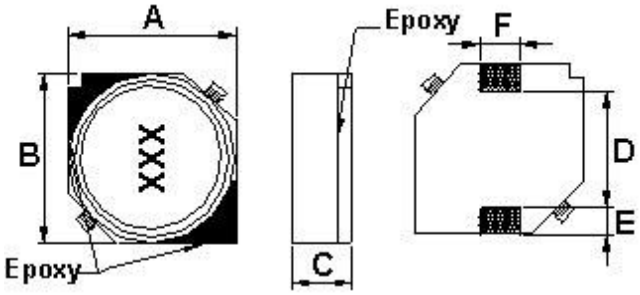

Dimension in mm

TYPE	A	B	C	D	E	F
BPSF00060628	6±0.2	6±0.2	2.8±0.2	1.5	2±0.1	3.0
BPSF00070728	7±0.2	7±0.2	2.8±0.2	4.9±typ	0.9±typ	2.0±0.2
BPSF00070730	7±0.2	7±0.2	3.0±0.2	4.9±typ	0.9±typ	2.0±0.2
BPSF00070732	7±0.2	7±0.2	3.2±0.2	4.9±typ	0.9±typ	2.0±0.2
BPSF00070745	7±0.2	7±0.2	4.5±0.3	4.9±typ	0.9±typ	2.0±0.2

Shape and Dimensions

BPSF00070755

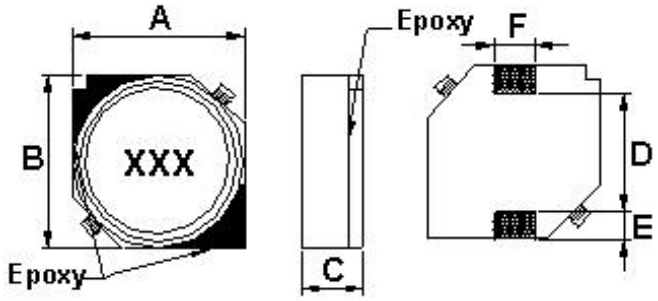

BPSF00101045/101058

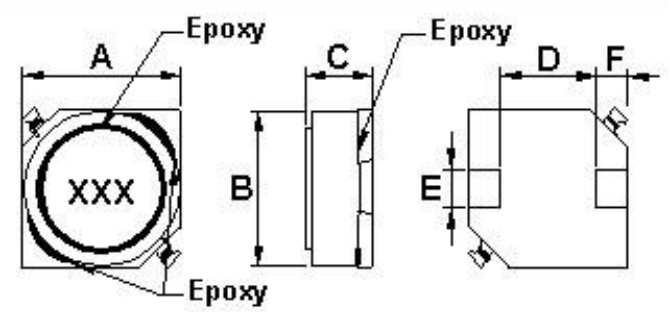

Dimension in mm

TYPE	A	B	C	D	E	F
BPSF00070755	7.0±0.2	7.0±0.2	5.5±0.3	4.9±typ	0.9±typ	2.0±0.2
BPSF00101045	10.1±0.3	10.1±0.3	4.5±0.3	6.0±0.2	3.0±0.2	2.0±0.2
BPSF00101058	10.1±0.3	10.1±0.3	5.8 Max	6.0±0.2	3.0±0.2	2.0±0.2

BPSF00131355/131365/131375

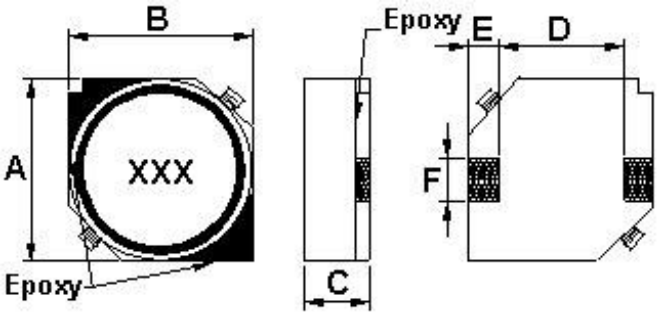

Dimension in mm

TYPE	A	B	C	D	E	F
BPSF00131355	12.5±0.3	12.5±0.3	5.5±0.3	8.6±0.2	2.0±0.2	3.0±0.2
BPSF00131365	12.5±0.3	12.5±0.3	6.5±0.35	8.6±0.2	2.0±0.2	3.0±0.2
BPSF00131375	12.5±0.3	12.5±0.3	7.5±0.35	8.6±0.2	2.0±0.2	3.0±0.2

Recommended Pattern

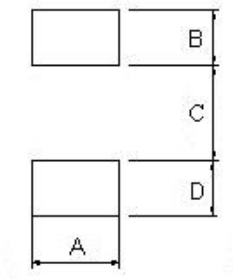

Dimension in mm

TYPE	A	B	C	D
BPSF00060628	2.2	1.5	4.0	1.5
BPSF00070728	2.2	1.5	4.9	1.5
BPSF00070730	2.2	1.5	4.9	1.5
BPSF00070732	2.2	1.5	4.9	1.5
BPSF00070745	2.2	1.5	4.9	1.5
BPSF00070755	2.2	1.5	4.9	1.5
BPSF00101045	3.2	2.5	5.6	2.5
BPSF00101058	3.2	2.5	5.6	2.5
BPSF00131355	3.2	2.5	8.6	2.5
BPSF00131365	3.2	2.5	8.6	2.5
BPSF00131375	3.2	2.5	8.6	2.5

Electrical Characteristics

Part Number	Inductance (μH)	Tolerance (±%)	Test Frequency (kHz)	RDC (Ω±20%)	Isat (A)	Irms (A) Max
BPSF000606284R7M00	4.7	20	1	0.0284	1.6	2.5
BPSF000606286R8M00	6.8	20	1	0.0354	1.5	2.2
BPSF00060628100M00	10	20	1	0.0532	1.3	1.8
BPSF00060628150M00	15	20	1	0.0745	1.0	1.4
BPSF00060628220M00	22	20	1	0.104	0.77	1.3
BPSF00060628330M00	33	20	1	0.148	0.69	1.1
BPSF00060628470M00	47	20	1	0.21	0.59	0.92
BPSF00060628680M00	68	20	1	0.29	0.50	0.78
BPSF00060628101M00	100	20	1	0.43	0.42	0.64

Note: When ordering, please specify tolerance code. Tolerance: M=±20%

- Operating temperature range - 40℃ ~ 125℃(Including self - temperature rise)
- Isat for Inductance drop 30% from its value without current
- Irms for a 25℃ temperature rise from 25℃ ambient with current
- Measure Equipment：
  L：E4980 or HP4284A , 1kHz 0.5V
  RDC：Chroma 16502
  Isat：HP4284A+HP42841A or WK3260B+WK3265B

Electrical Characteristics

Part Number	Inductance (μH)	Tolerance (±%)	Test Frequency (kHz)	RDC (Ω±20%)	Isat (A)
BPSF000707282R2M00	2.2	20	1	0.032	1.8
BPSF000707283R3M00	3.3	20	1	0.037	1.6
BPSF000707284R7M00	4.7	20	1	0.045	1.5
BPSF000707285R0M00	5.0	20	1	0.045	2.4
BPSF000707286R8M00	6.8	20	1	0.059	1.3
BPSF000707288R2M00	8.2	20	1	0.065	1.1
BPSF00070728100M00	10	20	1	0.083	1.1
BPSF00070728150M00	15	20	1	0.13	0.88
BPSF00070728220M00	22	20	1	0.18	0.75
BPSF00070728330M00	33	20	1	0.24	0.65
BPSF00070728470M00	47	20	1	0.34	0.54

Note: When ordering, please specify tolerance code. Tolerance: M=±20%

- Operating temperature range - 40℃ ~ 125℃(Including self - temperature rise)
- Isat for Inductance drop 10% from its value without current
- Measure Equipment：
  L：E4980 or HP4284A , 1kHz 0.5V
  RDC：Chroma 16502
  Isat：HP4284A+HP42841A or WK3260B+WK3265B

Please be sure to request approval specifications that provide further details of the products. Kindly note that the content of these specifications are subject to change or may be discontinued without prior notice. This product may not be designed/used in medical or high risk applications without Chilisin approval. Please contact our sales department before ordering.

Pulse a YAGEO company

CHILISIN ELECTRONICS CORP.

Electrical Characteristics

Part Number	Inductance (μH)	Tolerance (±%)	Test Frequency (kHz)	RDC (Ω±20%)	Isat (A)
BPSF000707303R3M00	3.3	20	1	0.023	1.8
BPSF000707304R7M00	4.7	20	1	0.036	1.6
BPSF000707306R8M00	6.8	20	1	0.041	1.5
BPSF00070730100M00	10	20	1	0.060	1.3
BPSF00070730150M00	15	20	1	0.084	1
BPSF00070730220M00	22	20	1	0.15	0.86
BPSF00070730330M00	33	20	1	0.16	0.65
BPSF00070730470M00	47	20	1	0.24	0.57
BPSF00070730680M00	68	20	1	0.31	0.49
BPSF00070730101M00	100	20	1	0.45	0.35
BPSF000707322R2M00	2.2	20	1	0.018	2.1
BPSF000707323R3M00	3.3	20	1	0.023	1.9
BPSF000707324R7M00	4.7	20	1	0.036	1.7
BPSF000707326R8M00	6.8	20	1	0.041	1.6
BPSF00070732100M00	10	20	1	0.053	1.4
BPSF00070732150M00	15	20	1	0.075	1.1
BPSF00070732220M00	22	20	1	0.11	0.96
BPSF00070732330M00	33	20	1	0.16	0.75
BPSF00070732470M00	47	20	1	0.24	0.67
BPSF00070732680M00	68	20	1	0.31	0.59
BPSF00070732101M00	100	20	1	0.45	0.45
BPSF00070732151M00	150	20	1	0.65	0.37
BPSF00070732221M00	220	20	1	1.05	0.29
BPSF00070732331M00	330	20	1	1.67	0.22
BPSF00070732471M00	470	20	1	2.05	0.2
BPSF00070732681M00	680	20	1	3.15	0.16
BPSF00070732102M00	1000	20	1	4.78	0.13

Note: When ordering, please specify tolerance code. Tolerance: M=±20%

- Operating temperature range - 40℃ ~ 125℃(Including self - temperature rise)
- Isat for Inductance drop 10% from its value without current
- Measure Equipment：

  L：E4980 or HP4284A , 1kHz 0.5V

  RDC：Chroma 16502

  Isat：HP4284A+HP42841A or WK3260B+WK3265B

Please be sure to request approval specifications that provide further details of the products. Kindly note that the content of these specifications are subject to change or may be discontinued without prior notice. This product may not be designed/used in medical or high risk applications without Chilisin approval. Please contact our sales department before ordering.

Pulse a YAGEO company

CHILISIN ELECTRONICS CORP.

Electrical Characteristics

Part Number	Inductance (μH)	Tolerance (±%)	Test Frequency (kHz)	RDC (Ω±20%)	Isat (A)	Irms (A) Max
BPSF000707453R3M00	3.3	20	1	0.02	2.5	2.3
BPSF000707454R7M00	4.7	20	1	0.03	2	2.1
BPSF000707456R8M00	6.8	20	1	0.039	1.7	1.74
BPSF00070745100M00	10	20	1	0.036	1.3	1.78
BPSF00070745150M00	15	20	1	0.052	1.1	1.53
BPSF00070745220M00	22	20	1	0.061	0.9	1.34
BPSF00070745330M00	33	20	1	0.096	0.82	1.09
BPSF00070745470M00	47	20	1	0.125	0.75	0.92
BPSF00070745680M00	68	20	1	0.175	0.6	0.77
BPSF00070745101M00	100	20	1	0.25	0.5	0.65
BPSF00070745151M00	150	20	1	0.34	0.4	0.55
BPSF00070745221M00	220	20	1	0.52	0.33	0.45
BPSF00070745331M00	330	20	1	0.74	0.25	0.37
BPSF00070745471M00	470	20	1	1.05	0.22	0.31
BPSF00070745681M00	680	20	1	1.48	0.2	0.27
BPSF00070745102M00	1000	20	1	2.28	0.14	0.25

Note: When ordering, please specify tolerance code. Tolerance: M=±20%

- Operating temperature range - 40℃ ~ 125℃(Including self - temperature rise)
- Isat for Inductance drop 10% from its value without current
- Irms for a 20℃ temperature rise from 25℃ ambient with current
- Measure Equipment：

  L：E4980 or HP4284A , 1kHz 0.5V

  RDC：Chroma 16502

  Isat：HP4284A+HP42841A or WK3260B+WK3265B

Electrical Characteristics

Part Number	Inductance (μH)	Tolerance (±%)	Test Frequency (kHz)	RDC (Ω)	Isat (A)	Irms (A) Max
BPSF000707551R5T00	1.5	30	100	0.0174±30%	6.2	4.0
BPSF000707552R2T00	2.2	30	100	0.0217±30%	5.3	3.5
BPSF000707553R3T00	3.3	30	100	0.0240±30%	4.3	3.3
BPSF000707554R7T00	4.7	30	100	0.0280±30%	3.6	3.1
BPSF000707556R8T00	6.8	30	100	0.0340±30%	3.0	2.8
BPSF00070755100M00	10	20	100	0.0391±20%	2.6	2.5
BPSF00070755150M00	15	20	100	0.0508±20%	2.1	2.2
BPSF00070755220M00	22	20	100	0.0643±20%	1.7	2.0
BPSF00070755470M00	47	20	100	0.1550±20%	0.8	1.0

Note: When ordering, please specify tolerance code. Tolerance: M=±20% , T=±30%

- Operating temperature range - 40℃ ~ 125℃(Including self - temperature rise)
- Isat for Inductance drop 10% from its value without current
- Irms for a 30℃ temperature rise from 25℃ ambient with current
- Measure Equipment：

  L：E4980 or HP4284A , 100kHz 1V

  RDC：Chroma 16502

  Isat：HP4284A+HP42841A or WK3260B+WK3265B

Please be sure to request approval specifications that provide further details of the products. Kindly note that the content of these specifications are subject to change or may be discontinued without prior notice. This product may not be designed/used in medical or high risk applications without Chilisin approval. Please contact our sales department before ordering.

Pulse a YAGEO company

CHILISIN ELECTRONICS CORP.

Electrical Characteristics

Part Number	Inductance (μH)	Tolerance (±%)	Test Frequency (kHz)	RDC (Ω±20%)	Isat (A)	Irms (A) Max
BPSF001010454R7T00	4.7	20	1	0.0200	4.5	
BPSF00101045100M00	10	20	1	0.0364	3.0	2.5
BPSF00101045150M00	15	20	1	0.0472	2.4	2.2
BPSF00101045220M00	22	20	1	0.0591	2.1	1.9
BPSF00101045330M00	33	20	1	0.0815	1.6	1.7
BPSF00101045470M00	47	20	1	0.1	1.4	1.5
BPSF00101045680M00	68	20	1	0.14	1.2	1.3
BPSF00101045101M00	100	20	1	0.2	1.0	1.1
BPSF00101045151M00	150	20	1	0.35	0.79	0.81
BPSF00101045221M00	220	20	1	0.47	0.65	0.70
BPSF00101045271M00	270	20	1	0.58	0.58	0.60
BPSF00101045331M00	330	20	1	0.68	0.54	0.58
BPSF00101045471M00	470	20	1	1.03	0.47	0.47
BPSF00101045681M00	680	20	1	1.6	0.38	0.38
BPSF00101045102M00	1000	20	1	2.8	0.32	0.29
BPSF00101045152M00	1500	20	1	3.4	0.22	0.26

Note: When ordering, please specify tolerance code. Tolerance: M=±20% , T=±30%

- Operating temperature range - 40℃ ~ 125℃(Including self - temperature rise)
- Isat for Inductance drop 10% from its value without current
- Irms for a 30℃ temperature rise from 25℃ ambient with current
- Measure Equipment：
  L：E4980 or HP4284A , 1kHz 0.5V
  RDC：Chroma 16502
  Isat：HP4284A+HP42841A or WK3260B+WK3265B
  Isat：HP4284A+HP42841A or WK3260B+WK3265B

Electrical Characteristics

Part Number	Inductance (μH)	Tolerance (±%)	Test Frequency (kHz)	RDC (Ω) Max	Isat (A)
BPSF001010584R7M00	4.7	20	1	0.035	4.0
BPSF00101058100M00	10	20	1	0.040	3.0
BPSF00101058220M00	22	20	1	0.0456	2.5
BPSF00101058330M00	33	20	1	0.085	2.1

Note: When ordering, please specify tolerance code. Tolerance: M=±20%

- Operating temperature range - 40℃ ~ 125℃(Including self - temperature rise)
- Isat for Inductance drop 15% from its value without current
- Measure Equipment：
  L：E4980 or HP4284A , 1kHz 0.5V
  RDC：Chroma 16502
  Isat：HP4284A+HP42841A or WK3260B+WK3265B

Please be sure to request approval specifications that provide further details of the products. Kindly note that the content of these specifications are subject to change or may be discontinued without prior notice. This product may not be designed/used in medical or high risk applications without Chilisin approval. Please contact our sales department before ordering.

Pulse a YAGEO company

CHILISIN ELECTRONICS CORP.

Electrical Characteristics

Part Number	Inductance (μH)	Tolerance (±%)	Test Frequency (kHz)	RDC (Ω±20%)	Isat (A)	Irms (A) Max
BPSF001313556R0M00	6	20	1	0.0164	3.6	4.9
BPSF00131355100M00	10	20	1	0.0215	3.4	4.3
BPSF00131355150M00	15	20	1	0.0259	2.8	3.9
BPSF00131355220M00	22	20	1	0.0338	2.3	3.4
BPSF00131355330M00	33	20	1	0.0415	1.9	3.1
BPSF00131355470M00	47	20	1	0.0618	1.6	2.5
BPSF00131355680M00	68	20	1	0.0832	1.3	2.2
BPSF00131355101M00	100	20	1	0.117	1.1	1.8
BPSF00131355151M00	150	20	1	0.19	0.88	1.4
BPSF00131355221M00	220	20	1	0.27	0.72	1.2
BPSF00131355331M00	330	20	1	0.41	0.59	1
BPSF00131355471M00	470	20	1	0.52	0.49	0.88
BPSF00131355681M00	680	20	1	0.76	0.43	0.73
BPSF00131355102M00	1000	20	1	1.12	0.34	0.6
BPSF00131355152M00	1500	20	1	1.73	0.29	0.48

Note: When ordering, please specify tolerance code. Tolerance: M=±20%

- Operating temperature range - 40℃~125℃(Including self - temperature rise)
- Isat for Inductance drop 10% from its value without current
- Irms for a 30℃ temperature rise from 25℃ ambient with current
- Measure Equipment：

  L：E4980 or HP4284A , 1kHz 0.5V

  RDC：Chroma 16502

  Isat：HP4284A+HP42841A or WK3260B+WK3265B

Please be sure to request approval specifications that provide further details of the products. Kindly note that the content of these specifications are subject to change or may be discontinued without prior notice. This product may not be designed/used in medical or high risk applications without Chilisin approval. Please contact our sales department before ordering.

Pulse a YAGEO company

CHILISIN ELECTRONICS CORP.

Electrical Characteristics

Part Number	Inductance (μH)	Tolerance (±%)	Test Frequency (kHz)	RDC (Ω±20%)	Isat (A)	Irms (A) Max
BPSF001313652R0T00	2	30	1	0.0117	10	6.2
BPSF001313654R2T00	4.2	30	1	0.015	7.3	5.5
BPSF001313657R0T00	7	30	1	0.0177	5.7	5.0
BPSF00131365100M00	10	20	1	0.0202	5.0	4.8
BPSF00131365150M00	15	20	1	0.0237	4.2	4.4
BPSF00131365220M00	22	20	1	0.0316	3.5	3.8
BPSF00131365330M00	33	20	1	0.0490	2.8	3.4
BPSF00131365470M00	47	20	1	0.0578	2.4	2.8
BPSF00131365680M00	68	20	1	0.0787	2.0	2.4
BPSF00131365101M00	100	20	1	0.123	1.6	1.9
BPSF00131365151M00	150	20	1	0.210	1.2	1.5
BPSF00131365221M00	220	20	1	0.273	1.0	1.2
BPSF001313751R2T00	1.2	30	1	0.00828	13	8.2
BPSF001313752R7T00	2.7	30	1	0.0094	10	7.0
BPSF001313753R9T00	3.9	30	1	0.0104	9	6.7
BPSF001313754R7T00	4.7	30	1	0.0110	7.8	6.3
BPSF001313755R6T00	5.6	30	1	0.0116	7.8	6.3
BPSF001313756R8T00	6.8	30	1	0.0131	7.2	5.9
BPSF00131375100M00	10	20	1	0.0156	5.5	5.4
BPSF00131375150M00	15	20	1	0.0184	4.7	5.0
BPSF00131375220M00	22	20	1	0.0263	4.0	4.0
BPSF00131375330M00	33	20	1	0.0395	3.2	3.4
BPSF00131375470M00	47	20	1	0.0528	2.7	3.0
BPSF00131375680M00	68	20	1	0.0778	2.0	2.4
BPSF00131375101M00	100	20	1	0.1250	1.9	1.9
BPSF00131375151M00	150	20	1	0.1750	1.5	1.6
BPSF00131375221M00	220	20	1	0.2580	1.3	1.3
BPSF00131375331M00	330	20	1	0.340	0.9	

Note: When ordering, please specify tolerance code. Tolerance: M=±20% , T=±30%

- Operating temperature range - 40℃ ~ 125℃(Including self - temperature rise)
- Isat for Inductance drop 10% from its value without current
- Irms for a 40℃ temperature rise from 25℃ ambient with current
- Measure Equipment：

  L：E4980 or HP4284A , 1kHz 0.5V

  RDC：Chroma 16502

  Isat：HP4284A+HP42841A or WK3260B+WK3265B

Please be sure to request approval specifications that provide further details of the products. Kindly note that the content of these specifications are subject to change or may be discontinued without prior notice. This product may not be designed/used in medical or high risk applications without Chilisin approval. Please contact our sales department before ordering.

Packaging Specifications

Tape Dimensions

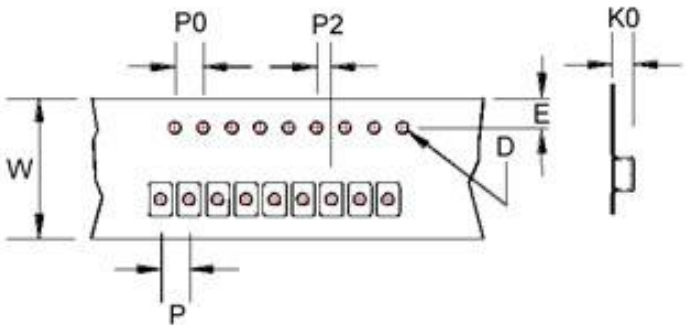

Tape Material

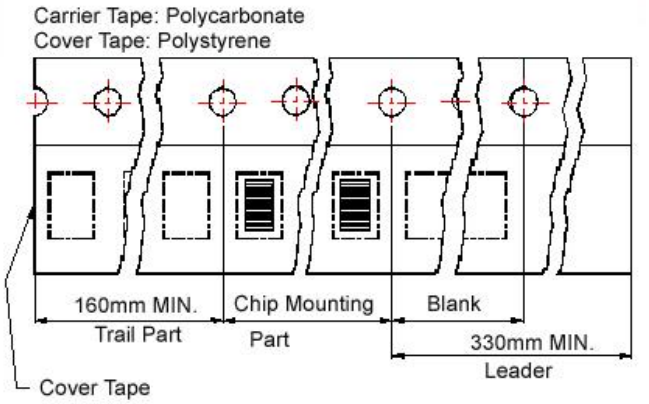

Reel Dimensions

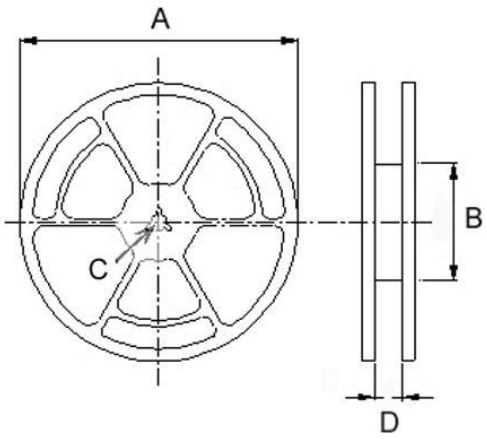

Dimensions in mm

TYPE	Tape Dimensions							Reel Dimensions				Quantity
	K0	D	E	W	P	P0	P2	A	B	C	D	PCS / REEL
BPSF00060728	3.4	1.55	1.75	16	12	4	2	330	100	13	16.0	1000
BPSF00070728	3.2	1.55	1.75	16	12	4	2	330	100	13	16.0	1000
BPSF00070730	3.5	1.55	1.75	16	12	4	2	330	100	13	16.0	1000
BPSF00070732	3.5	1.55	1.75	16	12	4	2	330	100	13	16.0	1000
BPSF00070745	4.8	1.55	1.75	16	12	4	2	330	100	13	16.0	1000
BPSF00070755	5.7	1.55	1.75	16	12	4	2	330	100	13	16.0	900
BPSF00101045	5.0	1.55	1.75	24	16	4	2	330	100	13	24.4	500
BPSF00101058	5.0	1.55	1.75	24	16	4	2	330	100	13	24.4	500
BPSF00131355	6.0	1.55	1.75	24	16	4	2	330	100	13	24.4	500
BPSF00131365	7.0	1.55	1.75	24	16	4	2	330	100	13	24.4	500
BPSF00131375	8.2	1.55	1.75	24	16	4	2	330	100	13	24.4	350