A BRAND OF AKOUSTIS

RFM Integrated Device, Inc.

PRODUCT SPECIFICATION

Part Number: CDR2005

DR Filter, Sub 6G/ 5th G, 3600 MHz, BW 400, IL 2.2

© 2020 by RFM Integrated Device, Inc.

ELECTRICAL CHARACTERISTICS:

This filter satisfies Table 1 at Temperature Range : -40 to +85℃ CENTER FREQUENCY :fo=3600MHz

PASSBAND WIDTH :3400~3800 MHz

INPUT/OUTPUT IMPEDANCE :50Ω

Max. INPUT POWER : 10 W

Moisture Sensitivity Level: MSL2a

TABLE 1

NO.	ITEM		SPECIFICATION	
			Min	Max
1	PASS BAND INSERTION LOSS			2.2 dB
2	PASS BAND RIPPLE			1.5 dB
3	PASS BAND RETURN LOSS		10 dB	
4	STOP—BAND ATTENUATION	at 3000~3260 MHz	30 dB	
		at 4020~4300 MHz	30 dB	
Item NO.4 specifies the absolute value of attenuation.				

※Data is measured on the manufacturer's EVB board

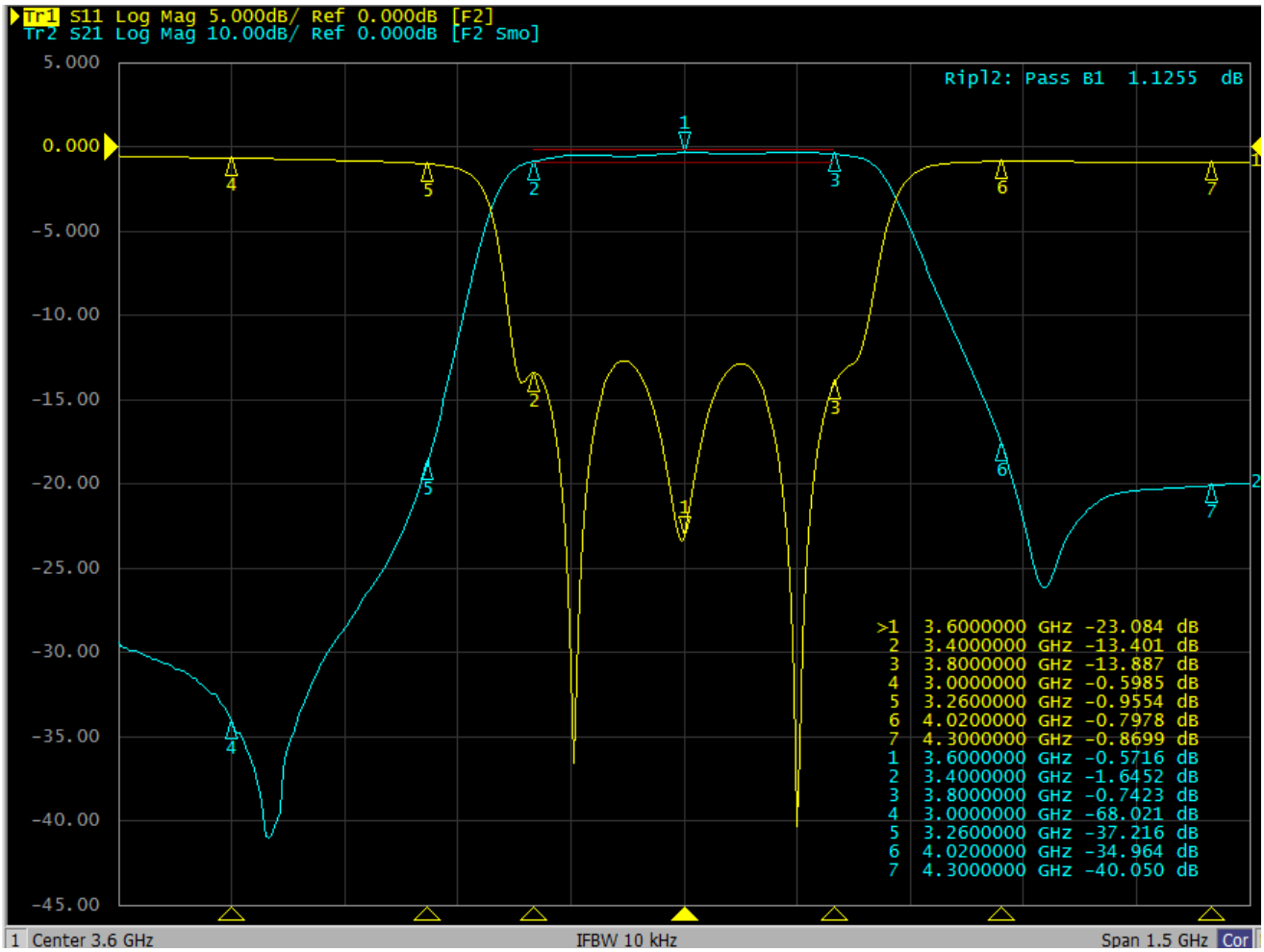

© 2020 by RFM Integrated Device, Inc.

2. Recommended Reflow Soldering Profile

The products can be assembled following Pb-free assembly. According to the Standard **IPC/ JEDEC J-STD-020C**, the temperature profile suggested is as follow:

Phase	Profile features	Pb-Free Assembly (SnAgCu)
PREHEAT	-Temperature Min(Tsmin) -Temperature Max(Tsmax) -Time(ts) form (Tsmin to Tsmax)	150℃ 200℃ 60-120 seconds
RAMP-UP	Avg. Ramp-up Rate (Tsmax to TP)	3℃/second(max)
REFLOW	-Temperature(TL) -Total Time above TL (t L)	217℃ 30-100 seconds
PEAK	-Temperature(TP) -Time(tp)	260℃ 3 second
RAMP-DOWN	Rate	6℃ / second max.
Time from 25℃ to Peak Temperature		8 minutes max.
Composition of solder paste		96.5Sn/3Ag/0.5Cu
Solder Paste Model		SHENMAO PF606-P26

Note：All the temperature measure point is on top surface of the component, if temperature over recommend, it will make component surface peeling or damage.

The graphic shows temperature profile for component assembly process in reflow ovens

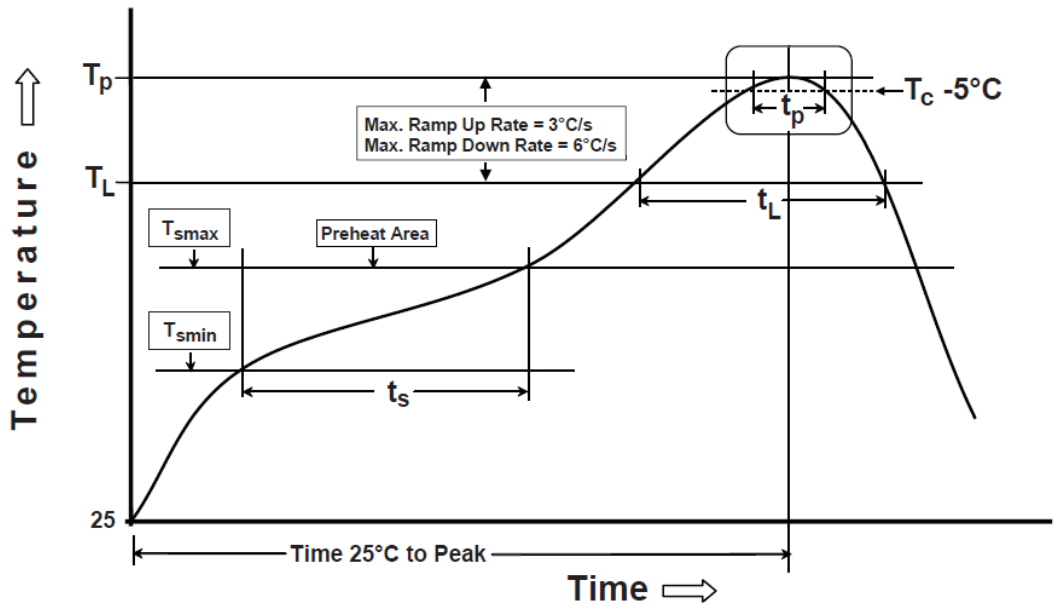

Soldering With Iron:

Soldering condition : Soldering iron temperature 270±10 ℃.
Apply preheating at 120℃ for 2-3 minutes. Finish soldering for each terminal within 3 seconds, if soldering iron over temperature 270±10 ℃ or 3 seconds, it will make component surface peeling or damage.
Soldering iron can not leakage of electricity.

© 2020 by RFM Integrated Device, Inc.

3.DIMENSION AND PCB LAYOUT

3-1 SHAPE AND DIMENSION

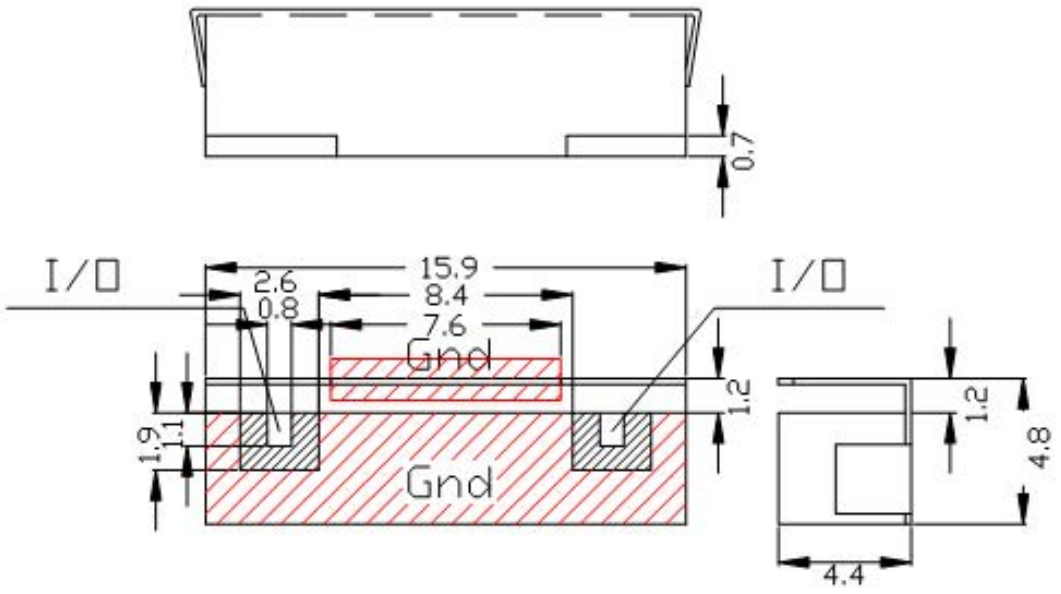

Case Material: Copper Nickel Alloy

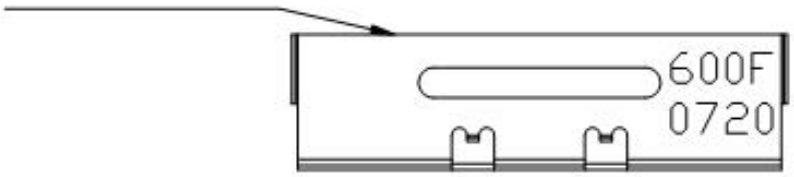

I/O: Input / Output
Gnd:Ground

C: Company Code
600F: product name(J3600F)
0720: month/year(07/2020)
Color: Black

Unit:mm
Tolerance:±0.3

3-2 PCB RECOMMENDED PATTERN FOR FILTER

Note: Test PCB material: FR4 4.6, 1.0mm.

The filter use limit: the layout goes away PCB edge.

3-2-1
Conductive Material Patten

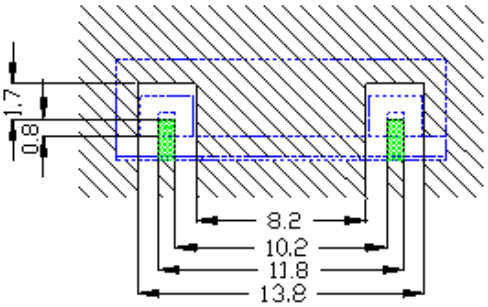

3-2-2
Solder resist Patten

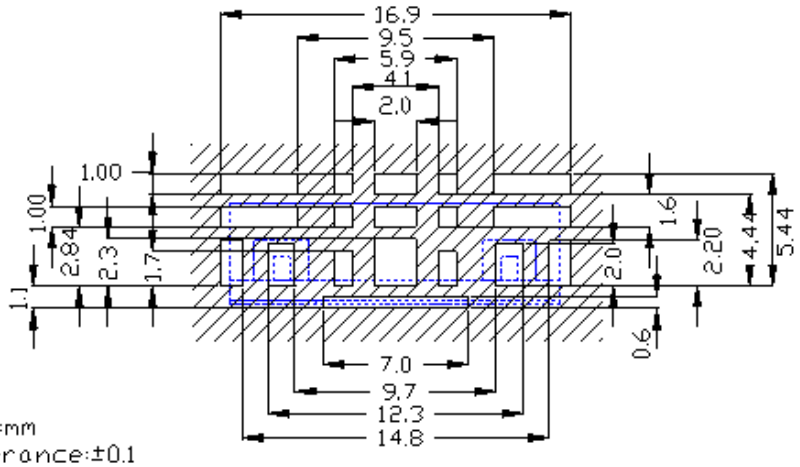

unit:mm
Tolerance:±0.1

Conductive Material:
Ground,connected to lower geound diameter of 0.3mm and max.distance of3.0mm.

covered with solder resist.

I/O Pads must be connected to lineswith 50Ω inpedance.
in the application o termination of 50Ω must be realized.

© 2020 by RFM Integrated Device, Inc.